PIAGGIO & C. s.p.a.

MOTO GUZZI

SPARE PARTS CATALOGUE

V7 Stone 750 2014

Chassis prefix: ZGULWS01
Engine prefix:

V 7

GU108

Index

Finished products....4
Alphanumeric index....5
FRAME....10
Table 33.01 - Frame I....10
Table 33.02 - Frame II....11
Table 33.03 - Lateral stand....12
Table 33.04 - Front footrests....13
Table 33.05 - Rear footrests....14
Table 33.06 - Gear lever....15
Table 33.07 - Front fork I....16
Table 33.08 - Fron fork II....17
Table 33.11 - Rear shock absorber....19
Table 33.12 - Fuel tank....20
Table 33.13 - Front body - Front mudguard....22
Table 33.14 - Saddle-Central bod....23
Table 33.15 - Rear body I- Mudguard....24
Table 33.16 - Rear body II- Plate holder....25
Table 33.17 - Dashboard....26
Table 33.18 - Handlebar - Controls....27
Table 33.19 - Front brake system....28
Table 33.21 - Fuel pump....29
Table 33.22 - Air box....30
Table 33.23 - Exhaust unit....32
Table 33.26 - Rear master cylinder....34
Table 33.27 - Rear brake caliper....35
Table 33.28 - Front lights....36
Table 33.29 - Rear lights....37
Table 33.30 - Electrical system I....38
Table 33.31 - Electrical system II....39
Table 33.32 - Lock hardware kit....41
Table 33.33 - Decal and plate set....42
Table 33.34 - Front wheel II....43
Table 33.35 - Rear wheel II....44
Table 33.48 - Fuel vapour recover system....45
ENGINE....46
Table 34.09 - Transmission complete I....46
Table 34.10 - Transmission complete II....47
Table 34.34 - Crank-case....50
Table 34.35 - Timing system cover....51
Table 34.36 - Cylinder head....52
Table 34.37 - Crankshaft cpl....53
Table 34.38 - Timing system....54
Table 34.39 - Oil pump....56

Table 34.40 - Clutch I..... 57
Table 34.41 - Clutch II..... 58
Table 34.42 - Transmission cage.....59
Table 34.43 - Gear box.....60
Table 34.44 - Gear box selector.....62
Table 34.45 - Generator - Regulator..... 63
Table 34.46 - Starter motor.....64
Table 34.47 - Throttle body.....65

Finished products

Code	Validity
GU9032111AUE00	
GU9032111AUE01	
GU9032111AUE03	
GU9032111AUE04	
GU9032111EUE00	
GU9032111EUE01	
GU9032111EUE03	
GU9032111EUE04	
GU9032111GBE00	
GU9032111GBE01	
GU9032111GBE03	
GU9032111GBE04	
GU9032111JPBDG	
GU9032111JPE00	
GU9032111JPE01	
GU9032111JPE03	
GU9032111JPE04	
GU9032111JPF00	
GU9032111JPF01	
GU9032111ZCE00	
GU9032111ZCE01	
GU9032112AUBDG	
GU9032191EUC00	

Code	No. table	Pos.
080341	33.30	6
248419	33.26	19
254485	33.15	4
254485	33.22	14
254485	33.23	20
254485	33.28	20
254485	34.45	10
2A000085	34.35	1
2A000097	34.42	2
2A000098	34.42	1
2A0000995	34.37	1
2A000106	34.40	8
2A000115	34.45	6
2A000129	34.45	7
2A000146	34.38	1
2A000147	34.38	2
2A0002355	34.34	1
2B000045	33.22	27
2B000176	33.23	11
2B000177	33.23	10
2B000348	33.05	13
2B000349	33.05	12
2B000558	33.07	1
2B000671	33.18	1
2B000840	33.14	16
2B000878	33.14	9
2B000880	33.14	1
2B000899	33.11	1
2B000970	33.21	2
2B000971	34.47	19
2B000972	34.47	20
2B001048	33.18	10
2B001049	33.18	24
2D000006	33.32	10
2D000024	34.45	1
2D000043	34.45	2
2G000013	33.33	11
2H000384000XN6	33.14	10
2H000385000XN6	33.14	17
2H000389	33.33	4
2H000413	33.33	3
2H000414000XN6	33.12	1
2H000414000XV6	33.12	1
2H000414000YR4	33.12	1
2H000415000XN6	33.12	1
2H000415000YR4	33.12	1
2L0001895	34.34	28
2Q000043	33.33	10
2Q000045	33.33	10
2Q000054	33.33	10
2R000109	33.08	29
2R000110	33.08	4
584211	33.31	10
638733	33.31	6
641040	33.30	8
641541	34.39	8
641725	33.30	7
641901	33.30	4
642034	33.30	3
658837	33.26	11
832029	33.30	14
856063	33.48	14
857206	34.45	4
860138	33.48	7
860651	34.09	19
874567	34.37	14
880260	34.47	4

Code	No. table	Pos.
883011	34.09	11
883015	33.05	13
883019	33.05	12
883051	33.04	1
883052	33.04	2
883127	33.22	6
883161	33.31	11
883192	33.27	7
883266	33.13	2
883293	33.23	15
883294	33.23	4
883295	33.14	5
883297	33.23	13
883298	33.23	14
883303	33.19	13
883417	33.28	18
883470	33.16	6
883476	33.32	3
883477	33.32	1
883480	33.16	9
883502	33.12	5
883569	33.17	11
883598	33.33	7
883688	33.34	10
883704	33.23	25
883826	34.34	18
884029	34.47	11
884031	34.42	6
884032	34.40	14
884038	34.40	7
884039	34.39	7
884310	34.47	15
884311	34.47	13
886141	33.33	5
886340	33.33	1
88635200XN6	33.13	1
886364	34.42	3
886365	34.34	10
886629	34.40	20
886670	34.37	11
886679	33.34	6
886680	33.35	8
887002	34.36	10
887003	34.35	2
887004	34.34	13
887005	34.42	10
887006	34.42	15
887093	34.39	9
887194	33.17	1
887195	33.17	1
887196	34.44	8
887207	33.12	1
887235	34.42	17
8872690001	34.37	10
8872690002	34.37	10
8872690003	34.37	10
8872724	34.36	1
8872754	34.36	2
887279	34.36	24
887431	33.27	3
887443	33.33	9
887448	33.35	12
887449	33.27	1
887481	33.30	12
887483	34.36	25
887523	34.36	9
887528	34.38	27

Code	No. table	Pos.
887571	33.34	1
887573	33.35	1
887787	33.21	5
887812	34.47	14
887815	33.22	13
887825	33.30	1
887825	33.31	1
887826	33.28	4
887826	33.29	4
887827	33.28	5
887827	33.29	5
887837	33.01	1
8878421	33.22	1
887843	33.22	2
887844	33.22	11
887845	33.22	12
887846	33.23	1
887847	33.23	2
887851	33.06	1
887852	33.18	4
887853	33.18	5
887873	33.32	1
887874	33.32	3
887877	33.29	1
887878	33.08	1
887879	33.08	2
887880	33.08	3
887882	33.08	5
887883	33.08	6
887884	33.08	7
887885	33.08	8
887886	33.08	9
887887	33.08	10
887888	33.08	11
887889	33.08	12
887890	33.08	13
887891	33.08	14
887892	33.08	15
887893	33.08	16
887894	33.08	17
887895	33.08	18
887896	33.08	19
887898	33.08	21
887899	33.08	22
887900	33.08	23
887901	33.08	24
887902	33.08	25
887903	33.08	26
887904	33.08	27
887905	33.08	28
887908	33.26	26
887910	33.26	1
887911	33.26	24
887912	33.08	30
887913	33.08	31
887914	33.08	32
887915	33.08	33
887916	33.08	34
887930	33.33	2
887944	33.12	1
887948	33.30	13
887952	33.26	27
890760	33.22	16
890979	33.28	16
893570	33.31	19
894505	33.35	13
894704	33.31	26

Code	No. table	Pos.
895839	33.33	8
896110	33.23	21
897478	34.45	3
898086	33.07	7
898164	33.11	3
967356	33.03	6
969973	34.36	26
976604	34.34	12
976608	34.10	1
976685	34.34	16
976898	34.36	20
976941	34.09	1
976992	34.42	21
977527	33.14	6
977527	33.32	4
978311	33.28	2
978323	33.19	15
978385	33.23	12
978415	33.14	8
978415	33.32	9
978662	33.28	2
978940	33.14	10
978943	33.14	17
978946	33.15	1
97894600XN6	33.15	1
978947	33.15	2
978949	33.16	1
978969	33.26	3
978970	33.26	13
981149	33.28	12
AP8101594	33.26	20
AP8101595	33.12	10
AP8101861	33.05	7
AP8102159	33.48	6
AP8102375	33.14	15
AP8102375	33.31	14
AP8102524	33.03	4
AP8102678	33.48	1
AP8102688	33.48	2
AP8102765	33.22	24
AP8102766	33.22	23
AP8102913	33.14	3
AP8104509	33.18	9
AP8104525	33.22	5
AP8104924	33.22	4
AP8104996	33.22	28
AP8113003	33.27	20
AP8113241	33.26	22
AP8113288	33.26	16
AP8113553	33.26	23
AP8120246	34.09	10
AP8120311	33.01	13
AP8120416	33.30	18
AP8120416	33.31	27
AP8120416	33.48	11
AP8120446	33.48	9
AP8120455	33.22	9
AP8120557	33.12	11
AP8120615	33.22	10
AP8120772	33.22	20
AP8120870	33.23	24
AP8120876	33.22	8
AP8120912	33.06	2
AP8120912	33.26	2
AP8121014	33.03	3
AP8121032	33.15	13
AP8121032	33.17	7

Code	No. table	Pos.
AP8121072	33.23	22
AP8121133	33.05	6
AP8121267	33.48	10
AP8121307	33.07	4
AP8121367	33.02	10
AP8121375	33.03	2
AP8121420	33.14	7
AP8121420	33.32	8
AP8121566	33.04	8
AP8121566	33.05	4
AP8121673	33.12	12
AP8121915	33.19	14
AP8121915	33.27	8
AP8124718	33.16	7
AP8124936	33.30	2
AP8127856	33.03	8
AP8133643	33.26	14
AP8133798	33.27	2
AP8133799	33.27	11
AP8133800	33.27	12
AP8134378	33.23	18
AP8134448	33.16	2
AP8134451	33.05	5
AP8144007	33.26	4
AP8144071	33.23	16
AP8144071	34.36	23
AP8144081	33.07	5
AP8144146	33.07	3
AP8144538	33.22	15
AP8144553	33.22	7
AP8144729	33.22	17
AP8145034	33.04	3
AP8145035	33.04	10
AP8149034	33.16	11
AP8150204	33.27	19
AP8150248	33.16	13
AP8150285	34.42	27
AP8150349	33.17	10
AP8150349	33.32	6
AP8150377	33.28	13
AP8150377	33.31	20
AP8150436	33.02	12
AP8150450	33.14	12
AP8150509	33.22	19
AP8152043	33.27	18
AP8152220	33.02	11
AP8152220	34.39	18
AP8152268	33.16	12
AP8152273	33.21	4
AP8152277	33.04	7
AP8152277	33.05	8
AP8152277	33.19	3
AP8152278	33.11	2
AP8152278	33.15	3
AP8152279	33.15	9
AP8152281	34.45	9
AP8152286	33.34	11
AP8152287	33.02	13
AP8152288	33.02	15
AP8152288	33.27	9
AP8152298	33.26	18
AP8152298	34.47	6
AP8152299	33.15	14
AP8152299	33.27	22
AP8152299	33.30	5
AP8152299	33.48	5
AP8152300	33.02	14

Code	No. table	Pos.
AP8152300	33.27	13
AP8152306	33.16	5
AP8152329	33.15	11
AP8152329	33.22	18
AP8152339	33.14	14
AP8152385	33.19	16
AP8152409	33.04	9
AP8152409	33.05	9
AP8181140	33.31	24
AP8201358	33.22	3
AP8201358	33.22	34
AP8201358	33.48	13
AP8213028	33.18	23
AP8213057	33.26	15
AP8213388	33.18	18
AP8213575	33.27	23
AP8220283	33.31	22
AP8220460	33.07	6
AP8221023	33.22	26
AP8221114	33.48	16
AP8221197	33.03	5
AP8221277	33.04	6
AP8224164	33.16	3
AP8224462	33.31	21
B016796	34.47	5
B043850	33.31	23
B063016	34.37	13
B063022	33.23	3
B063049	34.47	2
B063086	33.03	1
B063099	34.36	19
B063111	34.36	6
B063132	33.04	13
B063135	33.18	6
B063167	33.15	12
B063197	33.02	1
B063198	33.02	2
B063213	33.22	30
B063214	33.22	21
B063233	33.31	5
B063269	34.42	11
B063287	33.01	4
B063342	34.42	20
B063427	33.18	3
B063431	33.14	11
B063443	33.26	28
B063465	34.37	15
B063466	34.37	16
B063735	33.28	14
B063735	33.29	6
B063750	33.27	6
B063752	33.21	1
B063854	33.23	1
B063855	33.23	2
B063975	33.18	15
CM001928	33.07	8
CM001929	33.07	9
CM0074C9	33.30	10
CM0074D0	33.30	9
CM013202	33.31	25
CM225705	33.31	15
CM225710	33.31	16
CM225715	33.31	17
CM225730	33.31	18
CM228303	34.47	1
CM228304	34.47	1
GU00823923140	33.03	7

Code	No. table	Pos.
GU00823923140	33.22	32
GU00823923140	33.48	12
GU00823931055	33.28	19
GU00823931070	33.12	14
GU00823944050	33.12	13
GU00823950050	33.26	21
GU01528930	34.10	9
GU01609630	33.18	14
GU01654630	33.19	17
GU01659130	33.19	11
GU01659131	33.19	12
GU01665410	33.26	25
GU02717450	33.30	11
GU03013800	33.06	7
GU03013800	33.23	8
GU03013800	34.47	10
GU03067730	34.10	19
GU03101600	33.12	7
GU03101720	33.12	5
GU03101900	33.12	3
GU03102200	33.12	6
GU03102400	33.12	2
GU03103200	33.12	8
GU03103500	33.12	4
GU03163330	33.31	3
GU03270300	33.27	10
GU03604845	33.19	8
GU03605645	33.19	9
GU03609600	33.18	14
GU03617710	33.34	5
GU03617710	33.35	6
GU03658201	33.27	16
GU03658330	33.27	17
GU03658430	33.27	14
GU03660145	33.19	1
GU03661145	33.19	6
GU03664045	33.19	7
GU03740930	33.29	2
GU03749845	33.19	5
GU03922280	34.09	23
GU03995730	33.33	11
GU05107430	33.21	3
GU05659230	33.19	10
GU05730730	34.46	1
GU05781630	33.16	14
GU05900130	33.33	6
GU06740400	33.28	17
GU10054100	34.43	12
GU10214300	34.43	27
GU10214301	34.43	27
GU10214302	34.43	27
GU10214303	34.43	27
GU10214304	34.43	27
GU10214305	34.43	27
GU10528900	34.34	15
GU10528900	34.40	13
GU10528900	34.42	23
GU12003702	34.34	20
GU12022600	34.10	6
GU12022600	34.42	24
GU12087001	34.41	9
GU12154200	34.34	23
GU12154200	34.42	12
GU13021900	34.34	26
GU13021900	34.36	12
GU14086000	34.41	10
GU14086100	34.41	7

Code	No. table	Pos.
GU14090201	34.41	1
GU14090400	34.41	2
GU14217901	34.40	6
GU14217901	34.42	7
GU14217901	34.44	17
GU14609650	33.30	18
GU14609650	33.31	27
GU14615901	33.05	15
GU14615901	33.13	5
GU14615901	34.09	20
GU14615901	34.37	5
GU14616150	33.34	7
GU14616150	33.35	10
GU18144350	34.39	16
GU18161150	34.39	21
GU18257551	33.26	8
GU19002020	34.35	5
GU19002020	34.42	16
GU19003800	34.34	8
GU19007700	34.45	8
GU19015020	34.34	5
GU19017000	33.02	4
GU19018920	34.39	10
GU19021360	34.36	18
GU19021920	34.36	7
GU19025280	33.23	5
GU19025460	33.23	6
GU19027500	34.38	15
GU19030500	34.38	7
GU19032080	34.38	10
GU19032980	34.36	17
GU19032980	34.38	14
GU19034000	34.38	8
GU19037820	34.36	8
GU19045861	34.38	25
GU19055700	34.38	23
GU19058021	34.38	19
GU19058220	34.38	20
GU19062261	34.37	4
GU19065400	34.37	2
GU19067700	34.37	18
GU19083462	34.40	2
GU19146422	34.39	1
GU19152200	34.39	11
GU19202320	34.42	9
GU19203460	34.40	11
GU19206501	34.10	10
GU19212900	34.43	15
GU19213720	34.43	17
GU19213760	34.41	15
GU19214660	34.43	11
GU19215460	34.43	3
GU19234600	34.44	2
GU19237800	34.42	13
GU19327601	34.09	5
GU19328801	34.09	3
GU19350700	34.10	22
GU19351100	34.10	4
GU19351900	34.10	2
GU19352300	34.10	23
GU19353500	34.10	24
GU19355200	34.10	35
GU19355202	34.10	36
GU19355300	34.10	33
GU19355301	34.10	33
GU19355302	34.10	33
GU19355303	34.10	33

Code	No. table	Pos.
GU19355304	34.10	33
GU19355305	34.10	33
GU19355306	34.10	33
GU19355307	34.10	33
GU19355308	34.10	33
GU19355309	34.10	33
GU19355320	34.10	27
GU19355321	34.10	27
GU19355322	34.10	27
GU19355323	34.10	27
GU19355324	34.10	27
GU19355325	34.10	27
GU19355326	34.10	27
GU19355327	34.10	27
GU19355328	34.10	27
GU19355329	34.10	27
GU19355400	34.10	21
GU19355402	34.10	21
GU19355404	34.10	21
GU19355406	34.10	21
GU19355408	34.10	21
GU19355410	34.10	21
GU19355411	34.10	21
GU19355412	34.10	21
GU19355413	34.10	21
GU19356700	34.10	30
GU19356760	34.41	16
GU19356801	34.10	28
GU19357660	34.10	25
GU19547000	34.09	12
GU20085720	34.41	13
GU20147710	34.39	17
GU20147810	34.39	3
GU20148410	34.39	4
GU20148610	34.39	5
GU20208520	34.44	9
GU20258221	33.06	9
GU20352421	34.10	31
GU20355121	34.10	34
GU23204471	34.40	21
GU23204571	34.40	22
GU23211372	34.43	8
GU23217800	34.38	3
GU23328081	34.09	7
GU23548080	34.09	8
GU23548180	34.09	9
GU23922210	33.17	12
GU23943410	33.08	35
GU27037521	34.38	4
GU27061585	34.37	3
GU27061885	34.37	17
GU27062060	34.37	6
GU27065660	34.37	7
GU27066460	34.37	9
GU27066560	34.37	8
GU27152885	34.34	22
GU27153085	34.39	14
GU27210760	34.41	12
GU27633910	33.35	4
GU28157950	33.22	29
GU28157950	33.48	8
GU28252060	33.02	8
GU29729461	33.31	2
GU29759150	33.18	17
GU30577800	33.29	13
GU30577800	34.47	17
GU30601060	33.18	13

Code	No. table	Pos.
GU30602500	33.18	22
GU31003766	34.10	8
GU31003766	34.34	14
GU31003766	34.40	19
GU31003766	34.42	26
GU31016050	34.39	20
GU31037015	34.38	13
GU31038015	34.38	5
GU31045015	34.38	26
GU31112965	33.22	33
GU31121880	33.23	9
GU31150950	34.39	26
GU31159050	34.39	15
GU31327783	34.09	2
GU31439565	33.13	4
GU31513480	33.08	20
GU31544181	34.09	15
GU31547882	34.09	14
GU31614183	33.34	9
GU31615283	33.34	2
GU31616384	33.34	12
GU31634281	33.27	4
GU31634481	33.35	15
GU31740383	33.28	11
GU32032310	34.38	11
GU32053410	34.38	16
GU32054510	34.38	17
GU32067910	34.40	5
GU32080310	34.40	1
GU32084410	34.40	4
GU32115010	34.47	3
GU32115011	34.47	8
GU32115510	34.47	7
GU32121010	33.23	7
GU32202010	34.43	28
GU32206510	34.42	22
GU32208210	34.42	8
GU32210510	34.43	1
GU32211110	34.43	9
GU32211410	34.43	6
GU32211810	34.43	5
GU32212011	34.43	2
GU32213610	34.43	14
GU32213810	34.42	5
GU32214010	34.43	24
GU32214510	34.43	20
GU32214810	34.43	21
GU32215010	34.43	22
GU32215210	34.43	23
GU32231010	34.44	5
GU32231210	34.44	4
GU32233010	34.44	6
GU32234110	34.44	13
GU32234410	34.44	1
GU32234710	34.44	11
GU32234810	34.44	12
GU32234910	34.44	16
GU32235710	34.44	14
GU32238210	34.44	10
GU32256910	33.06	4
GU32257810	33.06	8
GU32350410	34.10	13
GU32351410	34.10	16
GU32354610	34.10	18
GU32431310	33.02	9
GU32434460	33.13	1
GU32439260	33.48	3

Code	No. table	Pos.
GU32441210	33.04	5
GU32441210	33.05	3
GU32442310	33.05	1
GU32442710	33.05	10
GU32443210	33.04	4
GU32443210	33.05	2
GU32443211	33.04	11
GU32443211	33.05	11
GU32457810	33.01	11
GU32461610	33.14	2
GU32506360	33.28	1
GU32517710	33.31	8
GU32555210	33.11	4
GU32555211	33.11	5
GU32603010	33.18	16
GU32603310	33.18	7
GU32605510	33.18	2
GU32615660	33.34	8
GU32632510	33.35	9
GU32633360	33.35	14
GU32633560	34.10	11
GU32634160	33.27	5
GU32636160	33.35	7
GU32657110	33.19	2
GU32735510	33.32	5
GU32747910	33.31	9
GU32753410	33.28	3
GU32753410	33.29	8
GU32781910	33.16	10
GU32782510	33.17	8
GU32782510	33.32	2
GU32944310	33.33	12
GU32999010	34.34	25
GU32999510	34.34	24
GU35214300	34.09	13
GU39238100	34.43	25
GU49609601	33.30	18
GU49609601	33.31	27
GU53429500	33.02	3
GU61027200	34.37	12
GU61036801	34.36	3
GU61038100	34.38	6
GU61054900	34.38	18
GU61270300	34.10	26
GU61270300	34.34	6
GU61270300	34.36	21
GU61270300	34.40	17
GU66103415	33.01	14
GU90271018	34.38	12
GU90271117	34.43	29
GU90271121	34.43	19
GU90271124	34.43	4
GU90272023	34.09	4
GU90272075	34.40	3
GU90274026	34.44	3
GU90353009	34.36	4
GU90353029	34.38	24
GU90353030	34.10	17
GU90400616	34.41	11
GU90402538	33.35	2
GU90402642	33.34	4
GU90403251	34.10	38
GU90403549	34.10	3
GU90407591	34.10	15
GU90706076	34.34	9
GU90706111	34.39	22
GU90706140	34.42	4

Code	No. table	Pos.
GU90706141	33.30	17
GU90706170	34.41	8
GU90706188	34.10	29
GU90706188	34.43	18
GU90706203	34.10	7
GU90706203	34.42	25
GU90706235	34.41	14
GU90706281	34.34	19
GU90706444	34.34	17
GU90706584	34.10	37
GU90714082	33.22	31
GU91113826	33.23	23
GU91120806	33.15	6
GU91180601	33.15	10
GU91181003	33.18	11
GU91181003	33.19	18
GU91551010	33.22	25
GU91551086	33.14	13
GU92201070	34.10	14
GU92201220	34.43	16
GU92201225	34.40	10
GU92204217	33.35	5
GU92204218	33.35	3
GU92204221	33.34	3
GU92218417	34.43	10
GU92230320	34.43	13
GU92234716	34.43	26
GU92249220	34.10	32
GU92249225	33.07	2
GU92249227	34.10	20
GU92251028	34.43	7
GU92252210	34.39	2
GU92252235	34.10	5
GU92296723	34.39	6
GU92602406	34.38	9
GU92602510	34.39	19
GU92603010	34.36	11
GU92606206	33.17	6
GU92606208	34.34	7
GU92606208	34.40	18
GU92606210	33.01	9
GU92606210	33.02	5
GU92606210	33.11	7
GU92606210	34.09	18
GU92606316	33.35	11
GU92606508	34.41	3
GU92606512	34.42	14
GU92609007	33.26	12
GU92630108	33.15	8
GU92630204	33.16	8
GU92630206	33.26	6
GU92630510	33.01	3
GU92630707	33.06	5
GU92640508	33.23	19
GU92660021	33.26	7
GU92787006	33.28	6
GU92787006	33.29	11
GU93180105	34.09	21
GU93180111	33.34	13
GU93180220	34.40	9
GU93180245	34.36	22
GU93222023	33.17	4
GU93231605	33.29	14
GU93231605	34.47	16
GU93301175	33.23	26
GU93301313	33.48	15
GU93305061	33.22	22

Code	No. table	Pos.
GU93450105	33.28	9
GU93450126	33.28	15
GU93450126	33.29	7
GU93450224	33.29	3
GU93450232	33.28	10
GU94321079	34.39	24
GU94321099	34.09	6
GU94321105	34.41	4
GU95004210	33.31	4
GU95005306	33.17	3
GU95005308	33.26	9
GU95005308	33.28	23
GU95005308	33.48	4
GU95005308	34.09	22
GU95005310	33.15	7
GU95005310	33.26	5
GU95008205	33.30	16
GU95008206	34.39	23
GU95008208	33.01	6
GU95008208	34.46	3
GU95008210	33.01	8
GU95008210	33.02	6
GU95008210	34.09	17
GU95008305	33.18	20
GU95008306	33.19	20
GU95008306	33.27	21
GU95020105	33.03	10
GU95021104	33.19	19
GU95021105	33.18	21
GU95021206	33.17	5
GU95021206	33.28	8
GU95021206	33.29	10
GU95100059	33.31	13
GU95100116	34.47	12
GU95100125	34.45	11
GU95100244	34.38	29
GU95100309	34.39	27
GU95100602	34.39	25
GU95100709	34.34	21
GU95129115	34.38	22
GU95129180	34.34	27
GU95129180	34.36	13
GU95129181	33.11	6
GU95129260	33.06	3
GU95187006	34.39	13
GU95500221	33.26	10
GU95500222	34.41	6
GU95780271	34.41	5
GU96451316	33.27	15
GU96451430	34.34	3
GU96451560	34.34	2
GU96506042	34.36	5
GU96508055	34.10	12
GU96508055	34.34	4
GU96510181	34.36	15
GU96510214	34.36	14
GU97202325	33.18	12
GU98054422	34.38	28
GU98082565	33.02	7
GU98084314	34.39	12
GU98084314	34.40	12
GU98110199	33.01	7
GU98210612	33.23	27
GU98230510	33.16	4
GU98230510	33.18	19
GU98230612	34.44	7
GU98257618	34.44	15

Code	No. table	Pos.
GU98350215	33.29	12
GU98370412	33.19	4
GU98370515	34.47	18
GU98370609	33.17	2
GU98370616	33.31	7
GU98370625	33.14	4
GU98370625	33.26	17
GU98370655	33.28	7
GU98370655	33.29	9
GU98370831	33.15	5
GU98370845	33.13	3
GU98612216	33.03	9
GU98622322	34.47	9
GU98632322	33.06	6
GU98680435	34.40	15
GU98680435	34.42	19
GU98680450	34.40	16
GU98680545	34.09	16
GU98680555	33.01	10
GU98682212	33.30	15
GU98682212	33.31	12
GU98682212	34.45	5
GU98682325	34.34	11
GU98682325	34.35	3
GU98682330	34.35	4
GU98682330	34.42	18
GU98682414	33.01	12
GU98682416	33.01	5
GU98682416	33.04	12
GU98682416	33.05	14
GU98682416	33.17	9
GU98682416	33.32	7
GU98682430	33.12	9
GU98682435	34.46	2
GU98682530	33.01	2
GU98690335	33.11	8
GU98690335	33.18	8
GU98690440	33.23	17
GU98692325	34.36	16
GU98692420	33.28	22
GU98880540	33.28	21
GU98882316	34.38	21

Group	FRAME
Code	33.01
Description	Frame I
Service	1

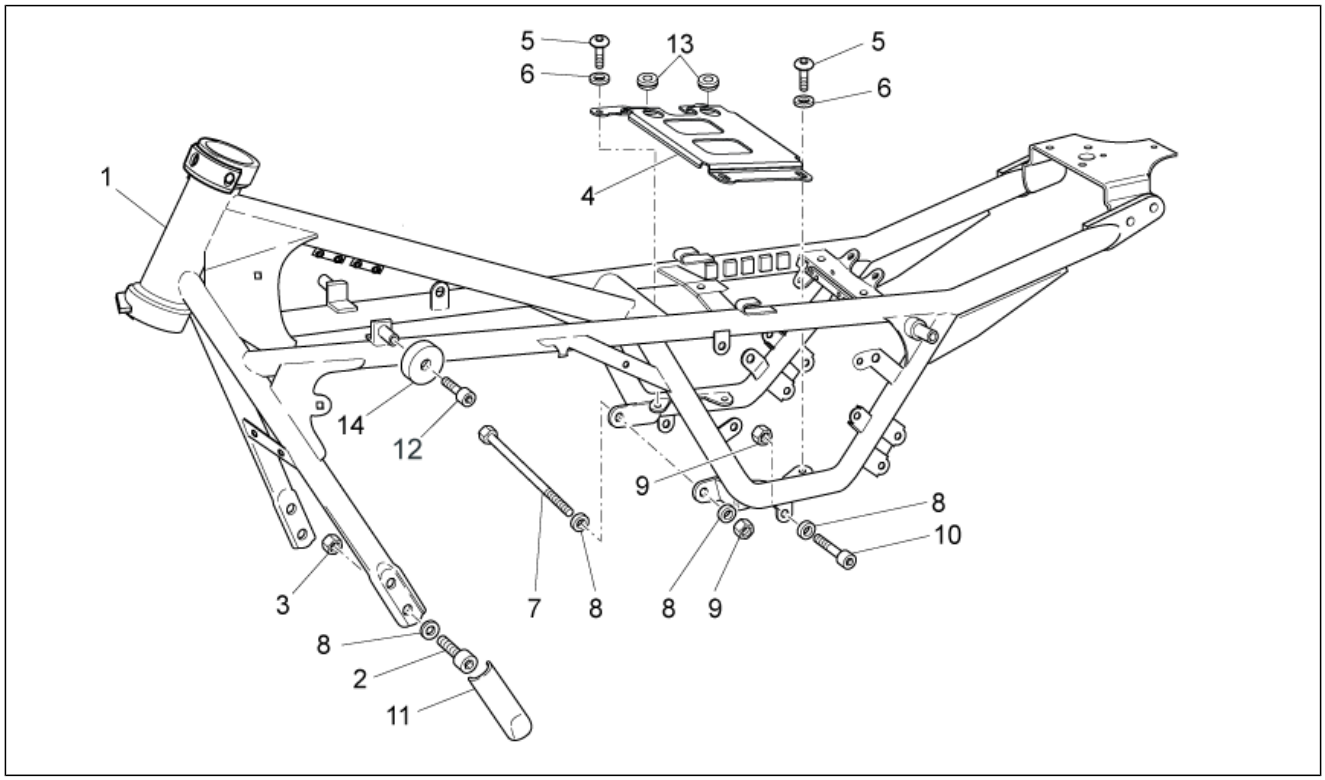

Pos.	Code	Description	Qty	Variants
1	887837	Frame p.	1	
2	GU98682530	Hex socket screw M10x30	4	
3	GU92630510	Nut M10x1,5	4	
4	B063287	Frame union plate	1	
5	GU98682416	Hex socket screw M8x16	4	
6	GU95008208	Washer 8,4X15X1,5	4	
7	GU98110199	Pin M10x205	1	
8	GU95008210	Washer 10,2X18X2	11	
9	GU92606210	Nut M10x1,5	3	
10	GU98680555	screw M10x55	2	
11	GU32457810	Guard	2	
12	GU98682414	Hex socket screw	2	
13	AP8120311	Rubber spacer *	2	
14	GU66103415	Rubber spacer	2	

Group	FRAME
Code	33.02
Description	Frame II
Service	1

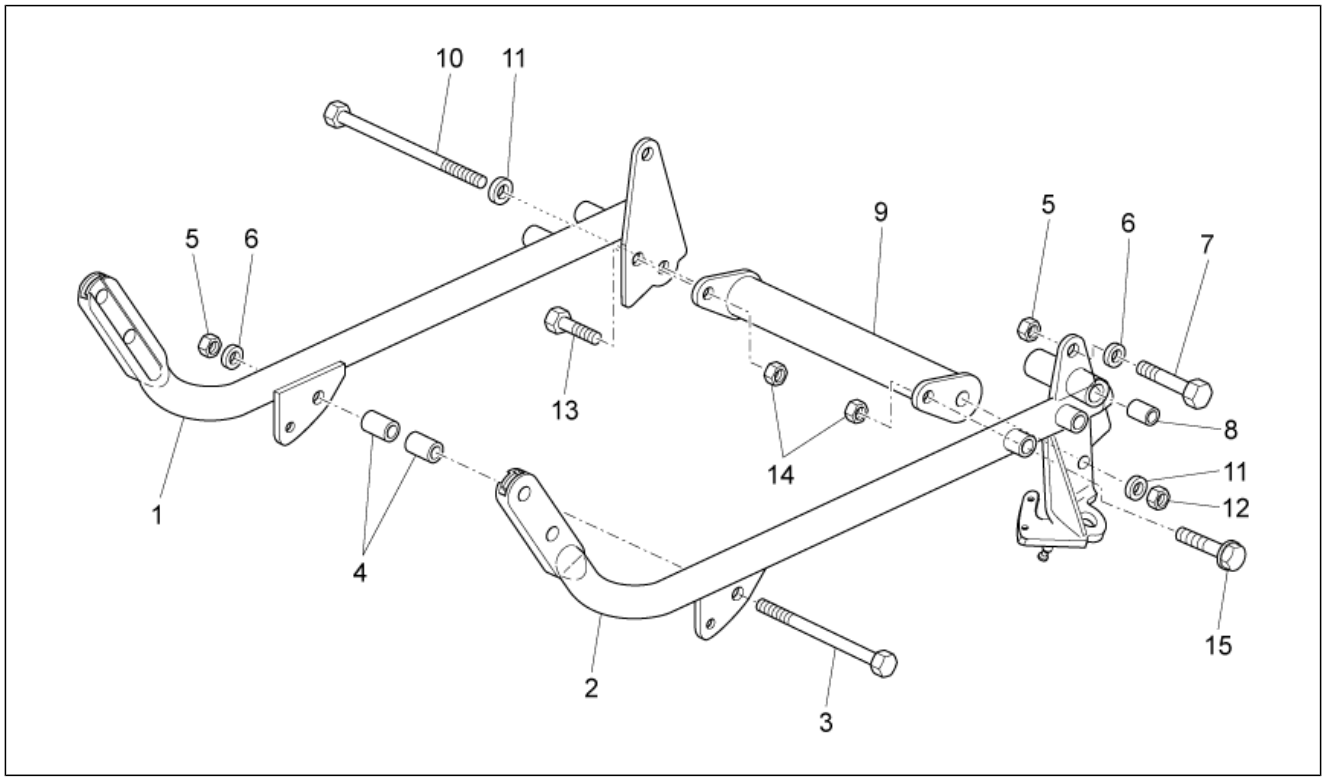

Pos.	Code	Description	Qty	Variants
1	B063197	RH craddle arm	1	
2	B063198	LH craddle arm	1	
3	GU53429500	Pin M10x250	1	
4	GU19017000	Bushing	2	
5	GU92606210	Nut M10x1,5	3	
6	GU95008210	Washer 10,2X18X2	3	
7	GU98082565	screw M10x65	2	
8	GU28252060	Bush 18 mm est.	2	
9	GU32431310	Cradle arms conn.crosspiece	1	
10	AP8121367	Pin M10x260	1	
11	AP8152220	Washer	2	
12	AP8150436	Low self-locking nut	1	
13	AP8152287	Screw w/ flange M8x25	1	
14	AP8152300	Self-locking nut M8	1	
15	AP8152288	Screw w/ flange	1	

Group	FRAME
Code	33.03
Description	Lateral stand
Service	1

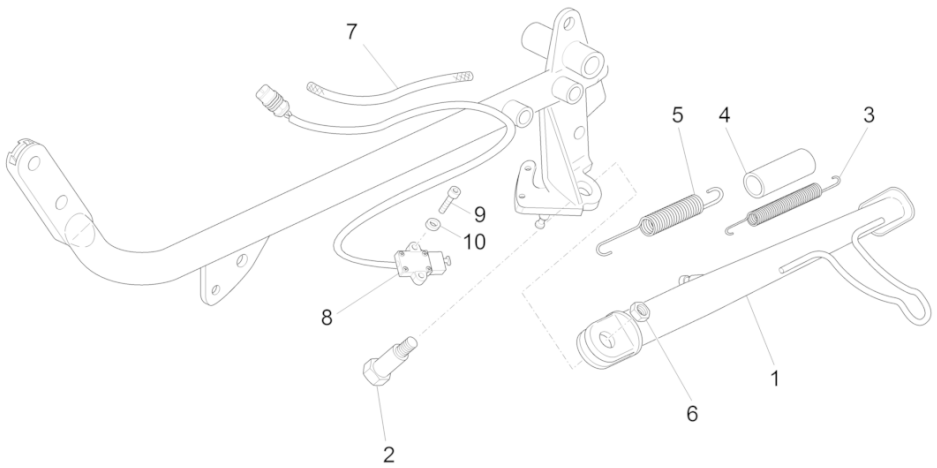

Pos.	Code	Description	Qty	Variants
1	B063086	Lateral stand	1	
2	AP8121375	Central stand fixing screw	1	
3	AP8121014	Coil pull spring *	1	
4	AP8102524	Stand spring protection	1	
5	AP8221197	Lateral stand spring	1	
6	967356	Flanged nut M10x1,25	1	
7	GU00823923140	Thermal sheath	1	
8	AP8127856	Lateral stand switch	1	
9	GU98612216	Hex socket screw	2	
10	GU95020105	Washer 5,3x8,9x2,4	2	

Group	FRAME
Code	33.04
Description	Front footrests
Service	1

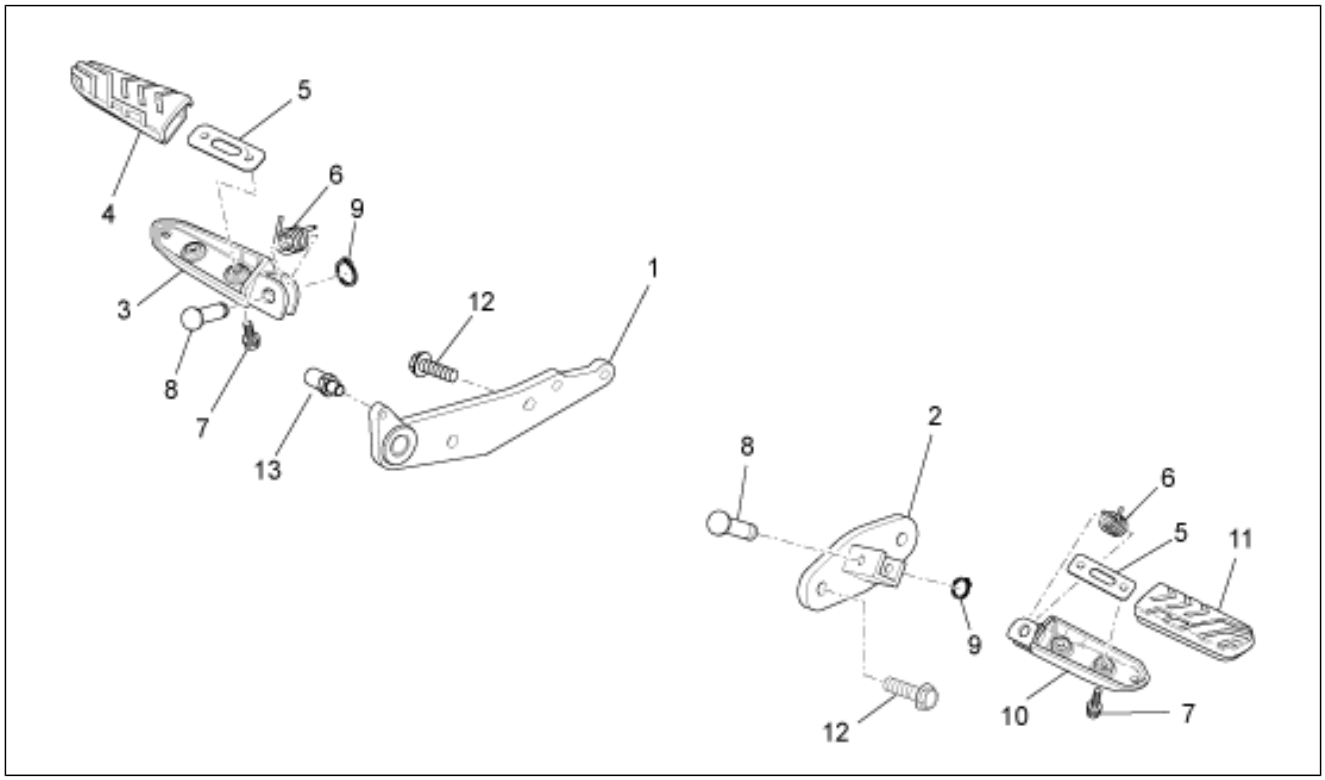

Pos.	Code	Description	Qty	Variants
1	883051	RH foot rest support	1	
2	883052	LH footrest support	1	
3	AP8145034	RH Foot rests	1	
4	GU32443210	Support rubber part	1	
5	GU32441210	Plate	2	
6	AP8221277	Footrest return spring	2	
7	AP8152277	Screw w/ flange M6x12	4	
8	AP8121566	Footrest pin	2	
9	AP8152409	Stop ring	2	
10	AP8145035	LH Foot rests	1	
11	GU32443211	Support rubber part	1	
12	GU98682416	Hex socket screw M8x16	4	
13	B063132	Limit stop	1	

Group	FRAME
Code	33.05
Description	Rear footrests
Service	1

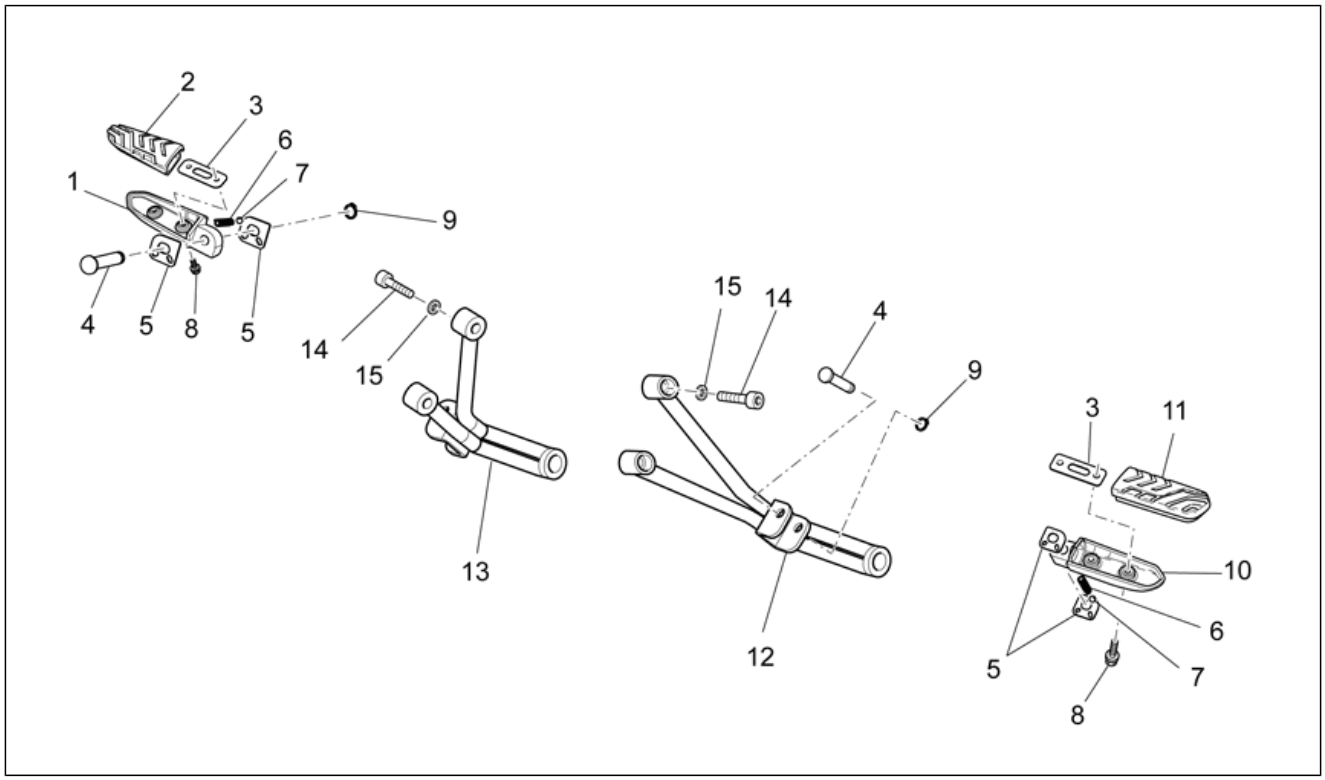

Pos.	Code	Description	Qty	Variants
1	GU32442310	Rear footrest, RH	1	
2	GU32443210	Support rubber part	1	
3	GU32441210	Plate	2	
4	AP8121566	Footrest pin	2	
5	AP8134451	Footrest plate	4	
6	AP8121133	Coil compress. spring	2	
7	AP8101861	Ball D6,35	2	
8	AP8152277	Screw w/ flange M6x12	4	
9	AP8152409	Stop ring	2	
10	GU32442710	Rear footrest, LH	1	
11	GU32443211	Support rubber part	1	
12	2B000349	Supporto pedane passeggero sx con Pi	1	
12	883019	LH footrest support	1	
13	2B000348	Supporto pedane passeggero dx con PI	1	
13	883015	RH foot rest support	1	
14	GU98682416	Hex socket screw M8x16	4	
15	GU14615901	Washer 8,4X13X0,8	4	

Group	FRAME
Code	33.06
Description	Gear lever
Service	1

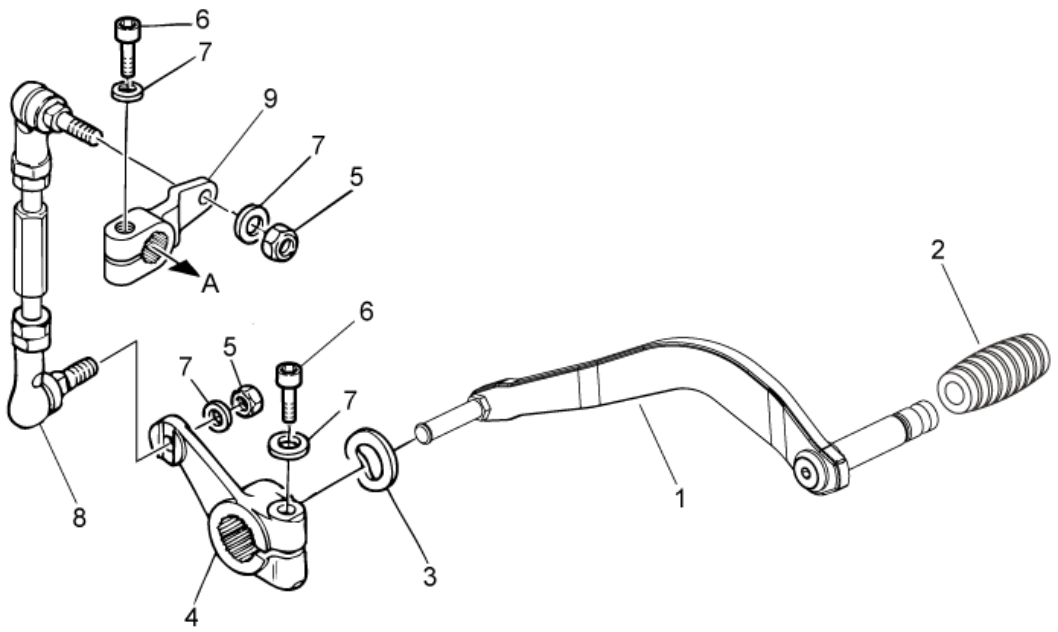

Pos.	Code	Description	Qty	Variants
1	887851	Gear lever	1	
2	AP8120912	Lever rubber	1	
3	GU95129260	Spring washer	2	
4	GU32256910	Lever	1	
5	GU92630707	Nut	2	
6	GU98632322	screw	2	
7	GU03013800	Washer 6,4x12	3	
8	GU32257810	Change gear tie rod compl.	1	
9	GU20258221	Shift lever	1	

Group	FRAME
Code	33.07
Description	Front fork I
Service	1

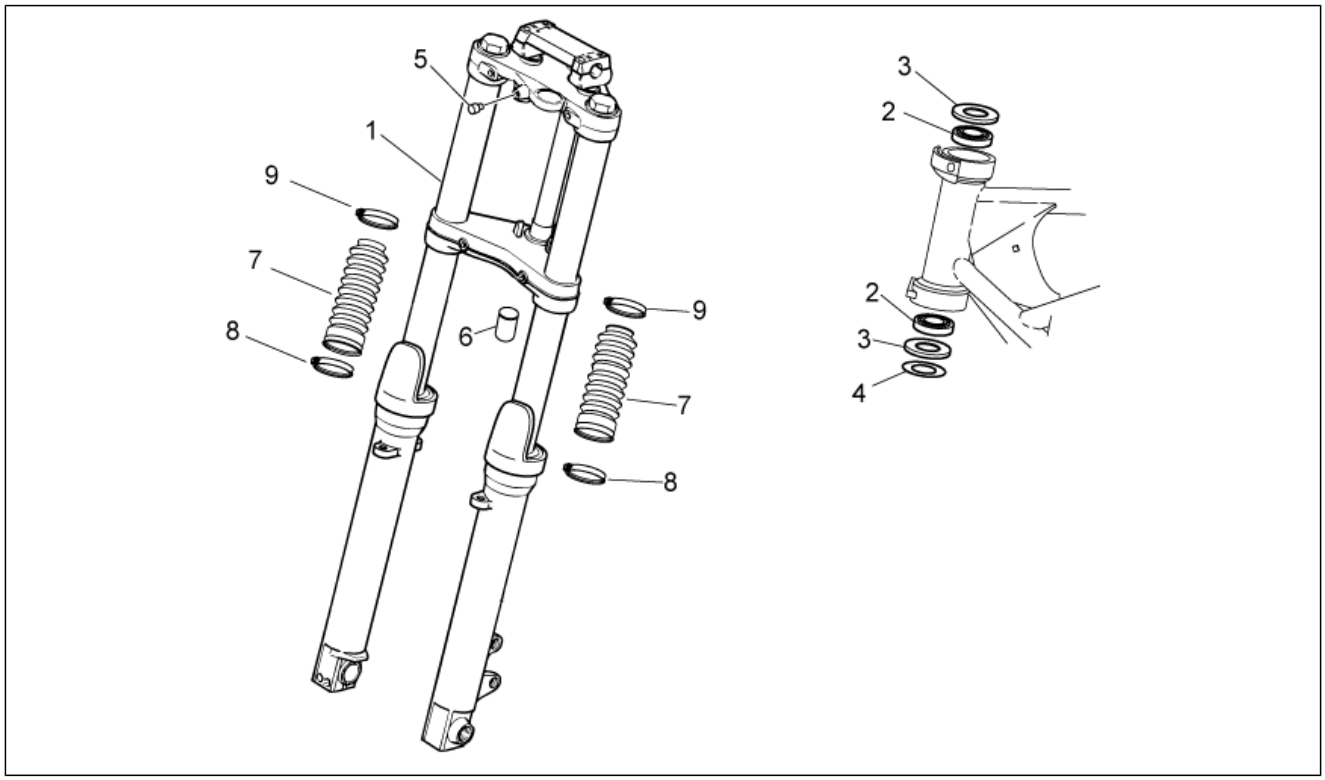

Pos.	Code	Description	Qty	Variants
1	2B000558	Front fork	1	
2	GU92249225	Tap.roller bearing	2	
3	AP8144146	Gasket ring	1	
4	AP8121307	Washer	1	
5	AP8144081	Rubber spacer	1	
6	AP8220460	Rubber cup	1	
7	898086	Anti-dust tube	2	
8	CM001928	Hose clamp 44	2	
9	CM001929	Fascetta stringitubo 63.5	2	

Group	FRAME
Code	33.08
Description	Fron fork II
Service	1

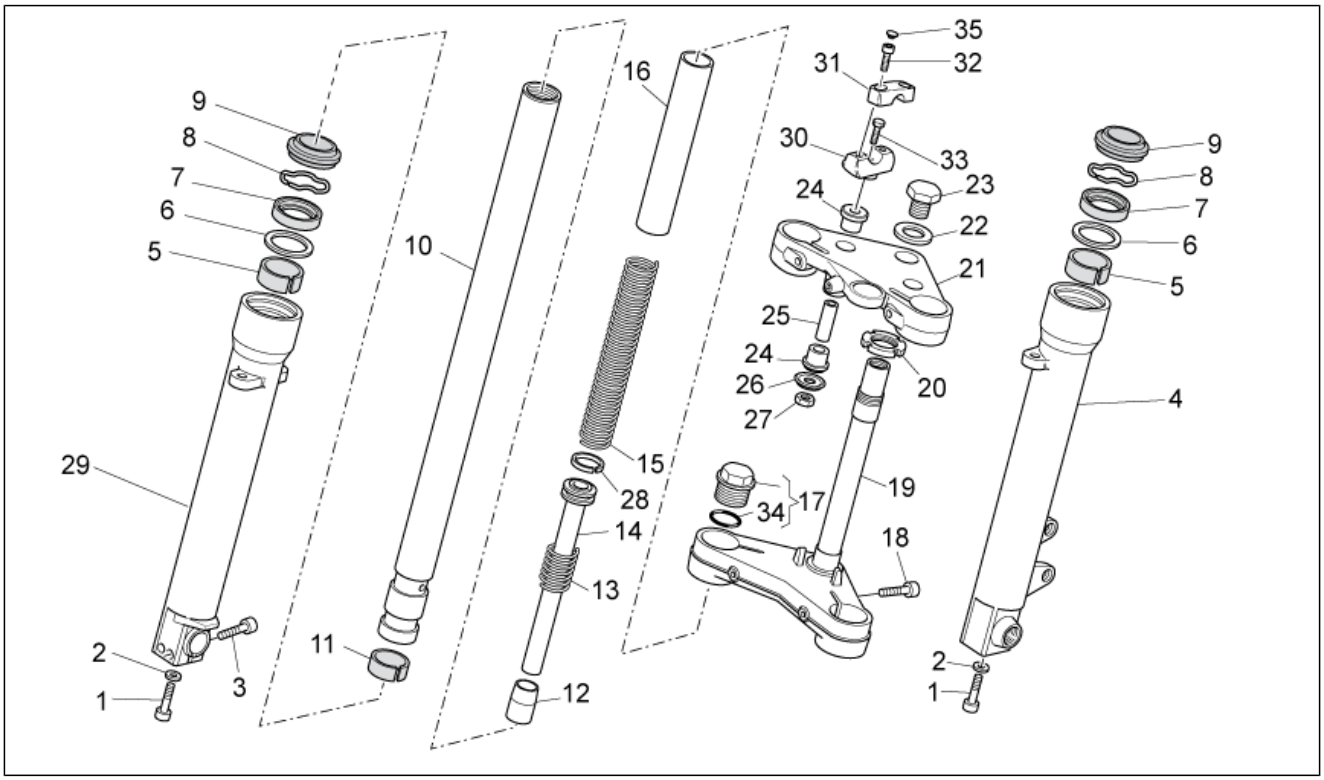

Pos.	Code	Description	Qty	Variants
1	887878	screw M10x30	2	
2	887879	Washer	2	
3	887880	screw	2	
4	2R000110	LH sleeve	1	
5	887882	Upper bush	2	
6	887883	Washer	2	
7	887884	Gasket ring	2	
8	887885	Stop ring	2	
9	887886	Dust cover	2	
10	887887	Sleeve	2	
11	887888	Bush	2	
12	887889	Pad	2	
13	887890	Return spring	2	
14	887891	Plunger, complete	2	
15	887892	Spring	2	
16	887893	pipe	2	
17	887894	Plug cpl.	2	
18	887895	screw	2	
19	887896	Stem base	1	
20	GU31513480	Ring nut M25X1	1	
21	887898	Upper plate	1	
22	887899	Washer	1	
23	887900	Nut	1	
24	887901	Rubber spacer	4	
25	887902	Spacer	2	
26	887903	Cup	2	
27	887904	Nut	2	
28	887905	Ring	2	

Group	FRAME
Code	33.08
Description	Fron fork II
Service	1

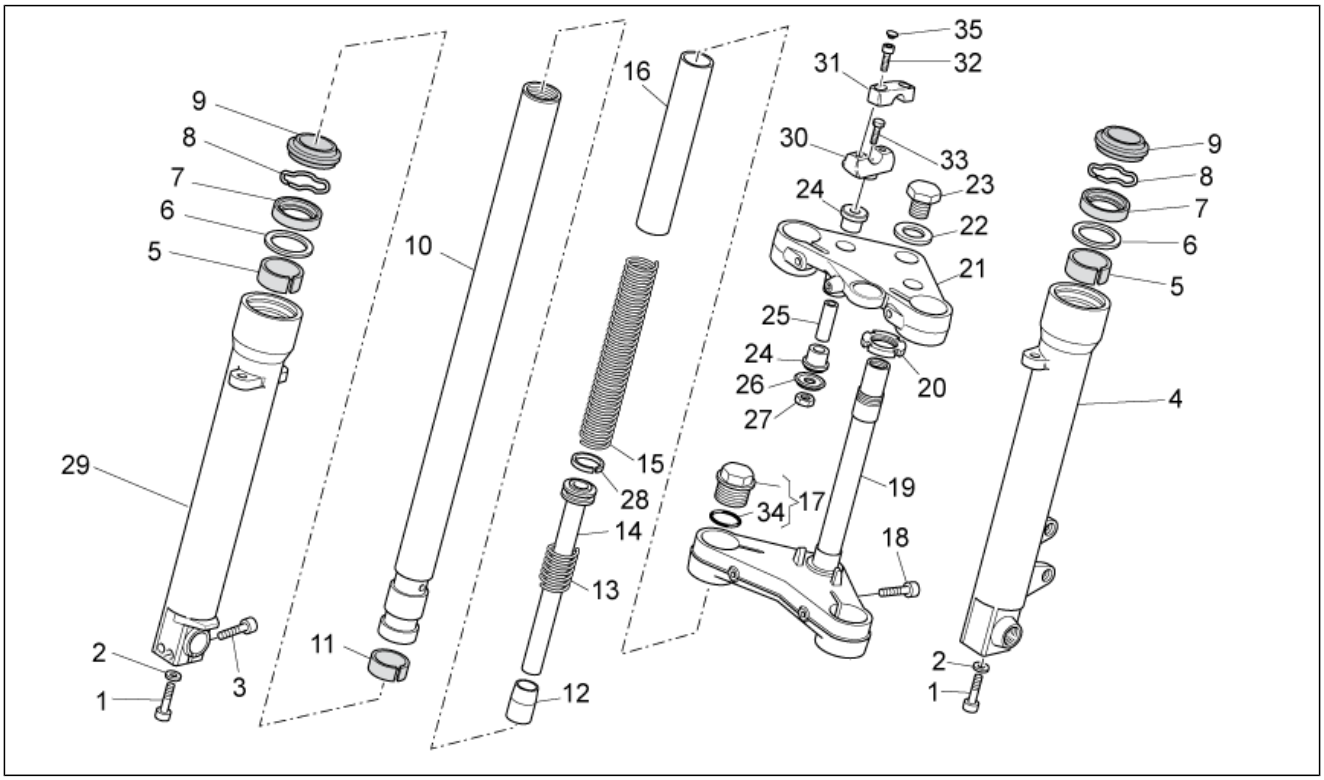

Pos.	Code	Description	Qty	Variants
29	2R000109	RH sleeve	1	
30	887912	Lower U-bolt	2	
31	887913	Upper U-bolt	2	
32	887914	screw M8x30	4	
33	887915	screw M10x60	2	
34	887916	O-ring 4118	2	
35	GU23943410	Plug	4	

Group	FRAME
Code	33.11
Description	Rear shock absorber
Service	1

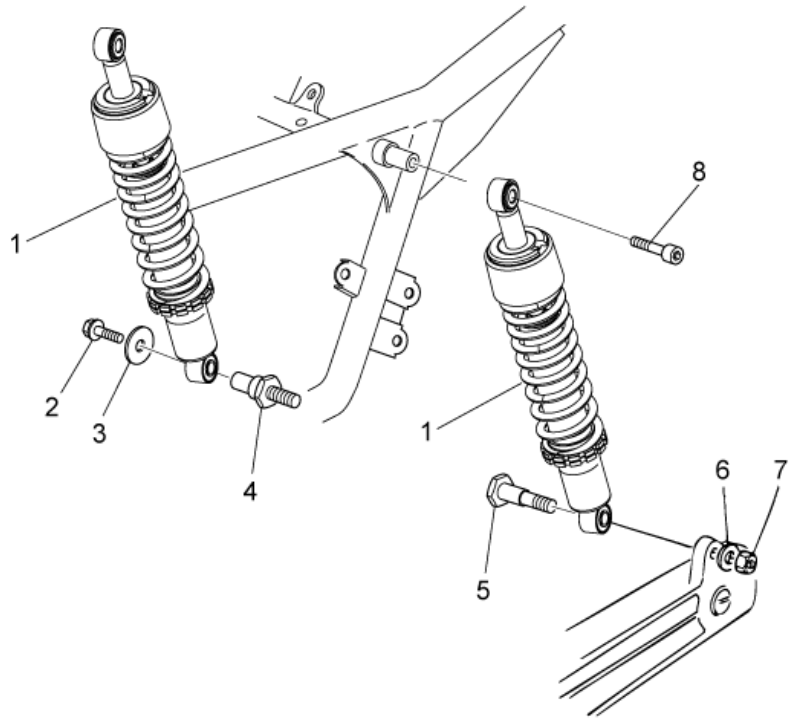

Pos.	Code	Description	Qty	Variants
1	2B000899	Rear shock absorber	2	
2	AP8152278	Screw w/ flange M6x16	1	
3	898164	Shock abs. spacer	1	
4	GU32555210	Pin	1	
5	GU32555211	Pin	1	
6	GU95129181	Washer	1	
7	GU92606210	Nut M10x1,5	1	
8	GU98690335	Hex socket screw	2	

Group	FRAME
Code	33.12
Description	Fuel tank
Service	1

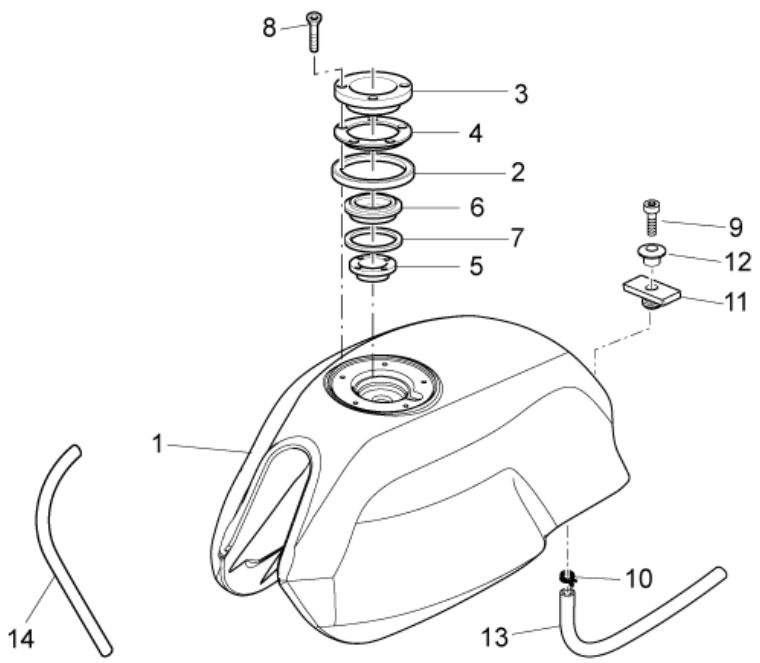

Pos.	Code	Description	Qty	Variants
1	2H000414000XN6	Fuel tank, black	1	**Year:**2014[E] **Vehicle colour:**Diablo Black[ND] **Technical Specifications:**Decal[D]
1	2H000414000XV6	Fuel tank, green	1	**Year:**2014[E] **Vehicle colour:**Verde Raptor opaco [VR] **Technical Specifications:**Decal[D]
1	2H000414000YR4	Fuel tank, red	1	**Year:**2014[E] **Vehicle colour:**Rosso Ventone[RV] **Technical Specifications:**Decal[D]
1	2H000415000XN6	Fuel tank, black	1	**Vehicle colour:**Diablo Black[ND] **Country:**China[CN] **Technical Specifications:**Decal[D]
1	2H000415000YR4	Fuel tank, red	1	**Vehicle colour:**Rosso Ventone[RV] **Country:**China[CN] **Technical Specifications:**Decal[D]
1	887207	Unfinished fuel tank	1	**Vehicle colour:**
1	887944	Fuel tank blank	1	**Vehicle colour:**Blank[GR] **Country:**China[CN]
2	GU03102400	Gasket	1	
3	GU03101900	Flange	1	
4	GU03103500	Ring	1	
5	883502	Reduction 24 mm	1	**Country:**China[CN]
5	GU03101720	Reduction 38 mm	1	
6	GU03102200	Plug ring nut	1	
7	GU03101600	Gasket	2	
8	GU03103200	screw	5	
9	GU98682430	Hex socket screw M8x30	1	
10	AP8101595	Hose clamp D10,1	1	
11	AP8120557	Tank rubber	1	
12	AP8121673	T bush *	1	
13	GU00823944050	pipe 5X9	1	

Group	FRAME
Code	33.12
Description	Fuel tank
Service	1

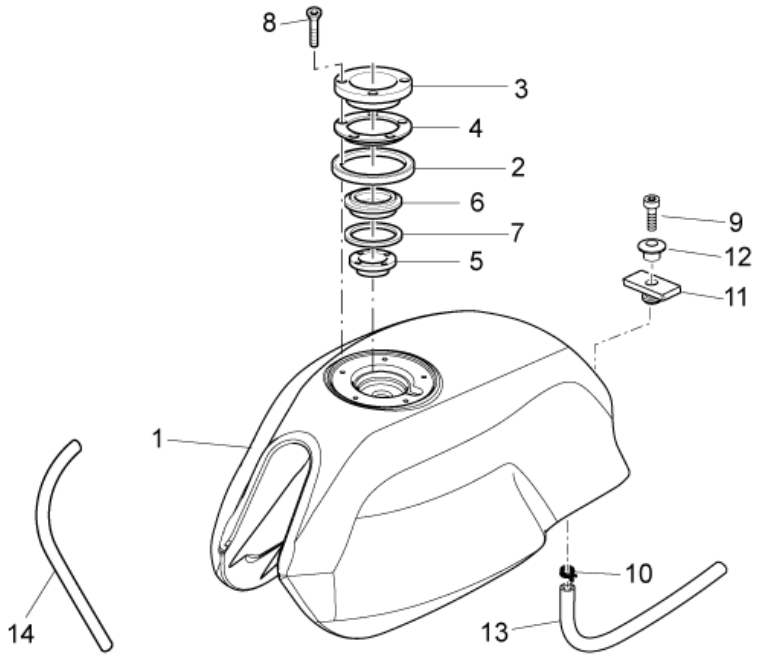

Pos.	Code	Description	Qty	Variants
14	GU00823931070	Gasket	1	

Group	FRAME
Code	33.13
Description	Front body - Front mudguard
Service	1

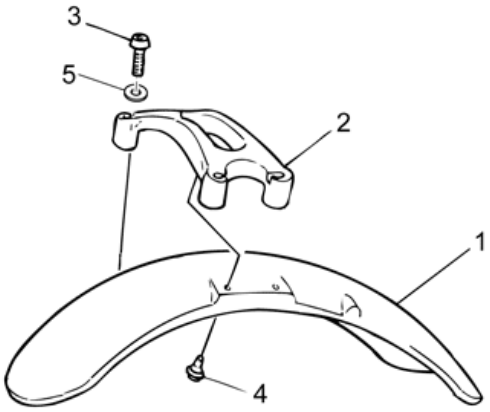

Pos.	Code	Description	Qty	Variants
1	88635200XN6	Front mudguard, black	1	
1	GU32434460	Front mudguard blank	1	**Vehicle colour:**Blank[GR]
2	883266	Stabilization plate	1	
3	GU98370845	Hex socket screw	4	
4	GU31439565	Special screw	4	
5	GU14615901	Washer 8,4X13X0,8	4	

Group	FRAME
Code	33.14
Description	Saddle-Central bod
Service	1

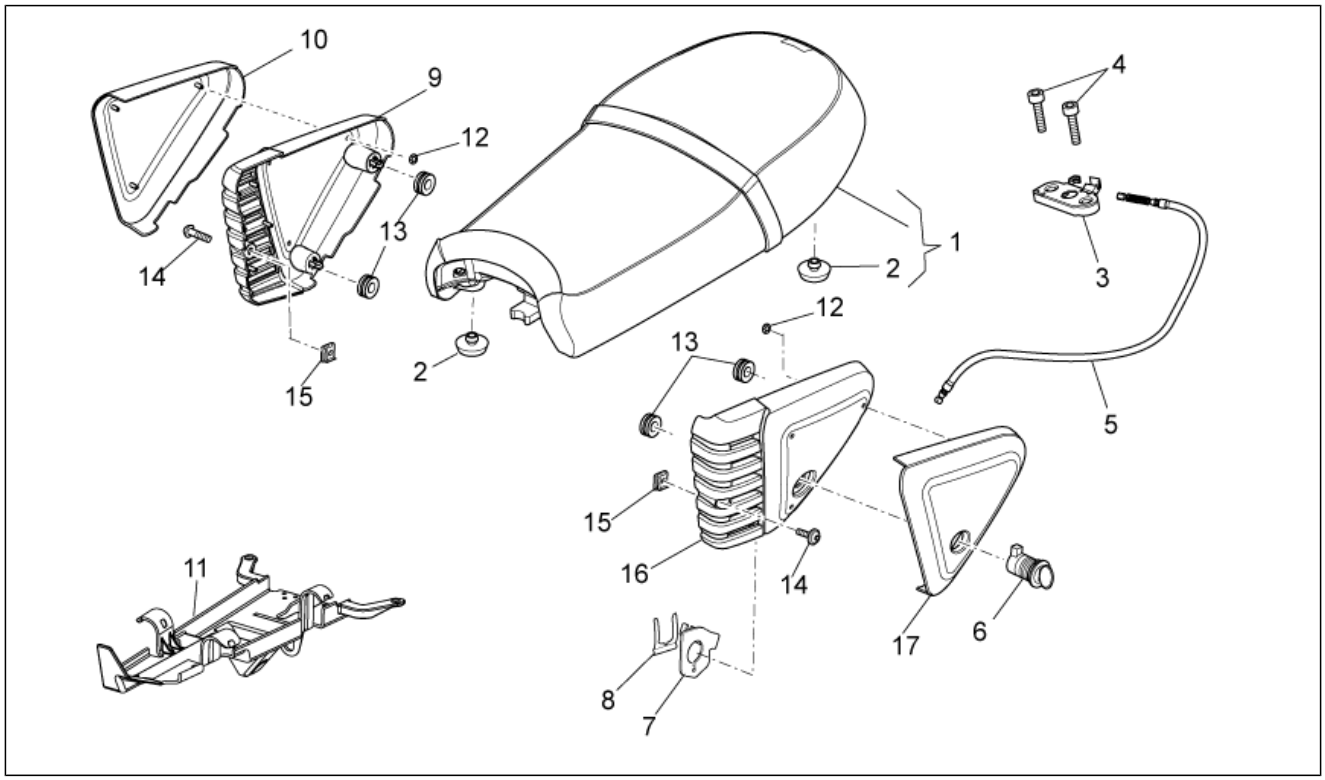

Pos.	Code	Description	Qty	Variants
1	2B000880	Two-seat saddle	1	**Year:**2014[E] **Vehicle colour:**Diablo Black[ND], Rosso Ventone[RV], Verde Raptor opaco [VR]
2	GU32461610	Rubber spacer	8	
3	AP8102913	Pass.saddle connecting plate	1	
4	GU98370625	Hex socket screw	2	
5	883295	Saddle release cable	1	
6	977527	Locking complete with keys	1	
7	AP8121420	Fork spring	1	
8	978415	Cable fixing plate	1	
9	2B000878	RH side panel	1	
10	2H000384000XN6	RH side panel, black	1	**Year:**2014[E] **Vehicle colour:**Diablo Black[ND], Rosso Ventone[RV], Verde Raptor opaco [VR] **Technical Specifications:**Decal[D]
10	978940	RH side panel, blank	1	**Vehicle colour:**Blank[GR]
11	B063431	Protection	1	
12	AP8150450	Washer for shafts D5	1	
13	GU91551086	Rubber spacer	4	
14	AP8152339	Screw w/ flange M5x9	2	
15	AP8102375	Clip m5	2	
16	2B000840	LH side panel	1	
17	2H000385000XN6	LH side panel, black	1	**Year:**2014[E] **Vehicle colour:**Diablo Black[ND], Rosso Ventone[RV], Verde Raptor opaco [VR] **Technical Specifications:**Decal[D]
17	978943	LH side panel, blank	1	**Vehicle colour:**Blank[GR]

Group	FRAME
Code	33.15
Description	Rear body I- Mudguard
Service	1

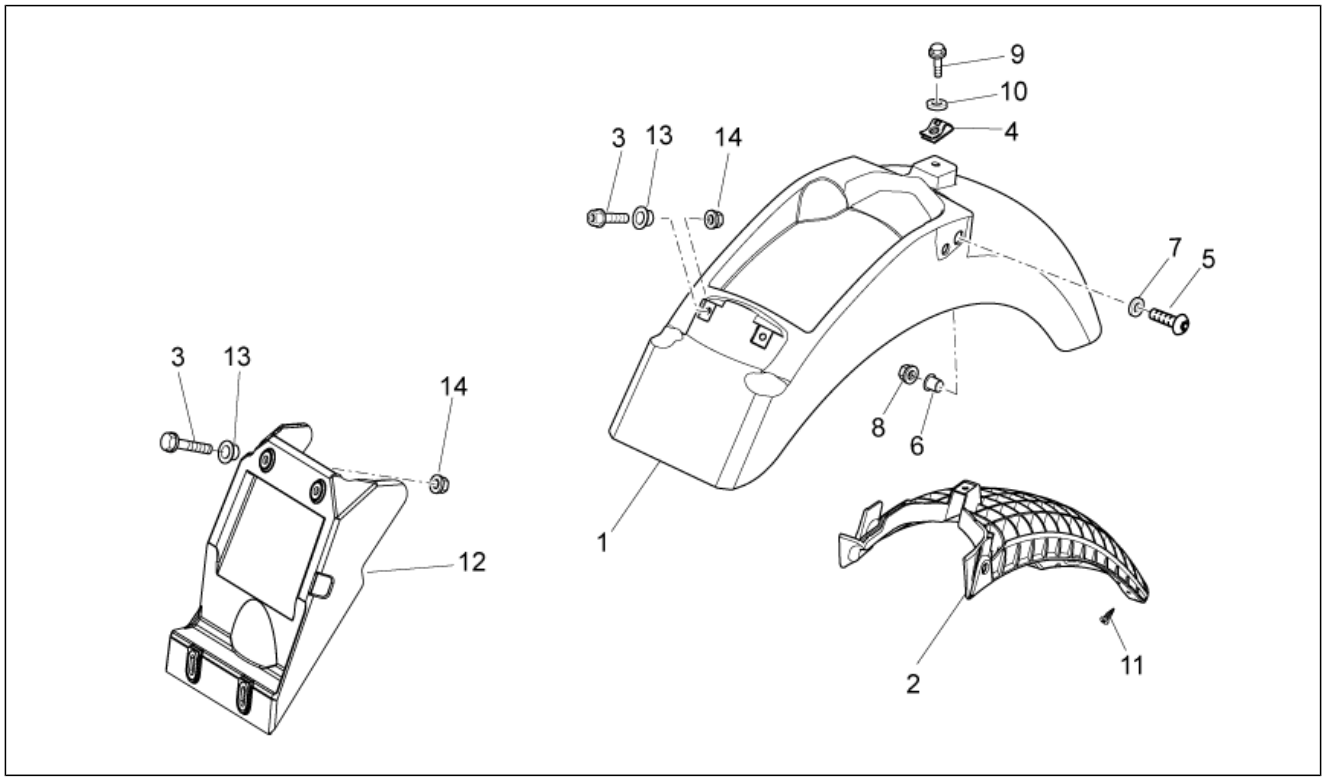

Pos.	Code	Description	Qty	Variants
1	978946	Rear mudguard blank	1	
1	97894600XN6	Rear mudguard, black	1	**Year:**2014[E] **Vehicle colour:**Diablo Black[ND], Rosso Ventone[RV], Verde Raptor opaco [VR]
2	978947	Support	1	
3	AP8152278	Screw w/ flange M6x16	4	
4	254485	Spring plate M6	1	
5	GU98370831	Hex socket screw M8x30	2	
6	GU91120806	Spacer	2	
7	GU95005310	Washer 8,4x18x2	2	
8	GU92630108	Nut	2	
9	AP8152279	Screw w/ flange M6x20	2	
10	GU91180601	Spacer 6,2x8x3	2	
11	AP8152329	Phillips screw, SWP M5x20	3	
12	B063167	Splash guard	1	
13	AP8121032	Bush	6	
14	AP8152299	Self-locking nut M6	6	

Group	FRAME
Code	33.16
Description	Rear body II- Plate holder
Service	1

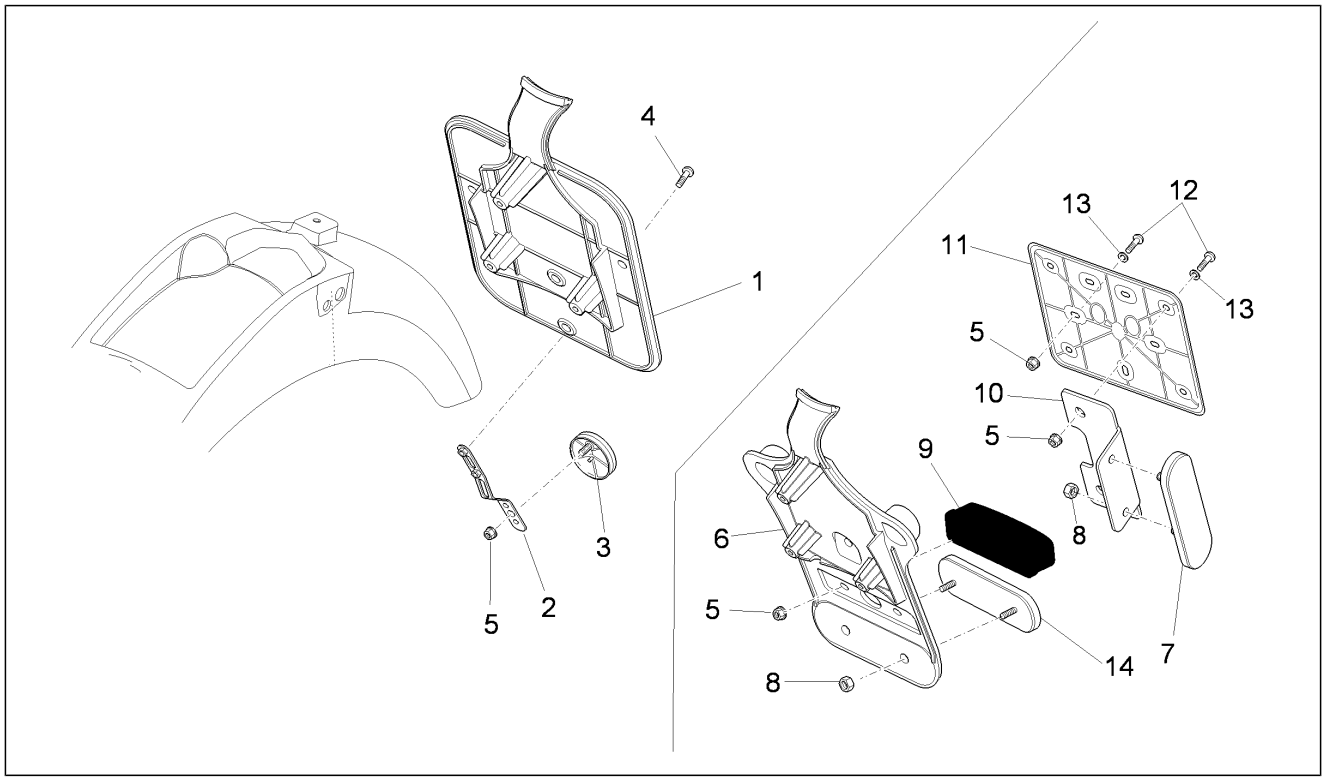

Pos.	Code	Description	Qty	Variants
1	978949	Number plate holder	1	
2	AP8134448	Reflector support	1	
3	AP8224164	Rear reflector, red	1	
4	GU98230510	Hex socket screw	1	
5	AP8152306	Self-locking nut m5	1	
6	883470	Number plate holder	1	**Country:**China[CN]
7	AP8124718	Rear reflector, red	2	**Country:**China[CN]
8	GU92630204	Nut	6	**Country:**China[CN]
9	883480	Number-plate light	1	**Country:**China[CN]
10	GU32781910	Reflector support	2	**Country:**China[CN]
11	AP8149034	Number plate support	1	**Country:**China[CN]
12	AP8152268	Hex socket screw M5x16	7	**Country:**China[CN]
13	AP8150248	Washer 5,5x15x1,6	7	**Country:**China[CN]
14	GU05781630	Reflector, amber	1	**Country:**China[CN]

Group	FRAME
Code	33.17
Description	Dashboard
Service	1

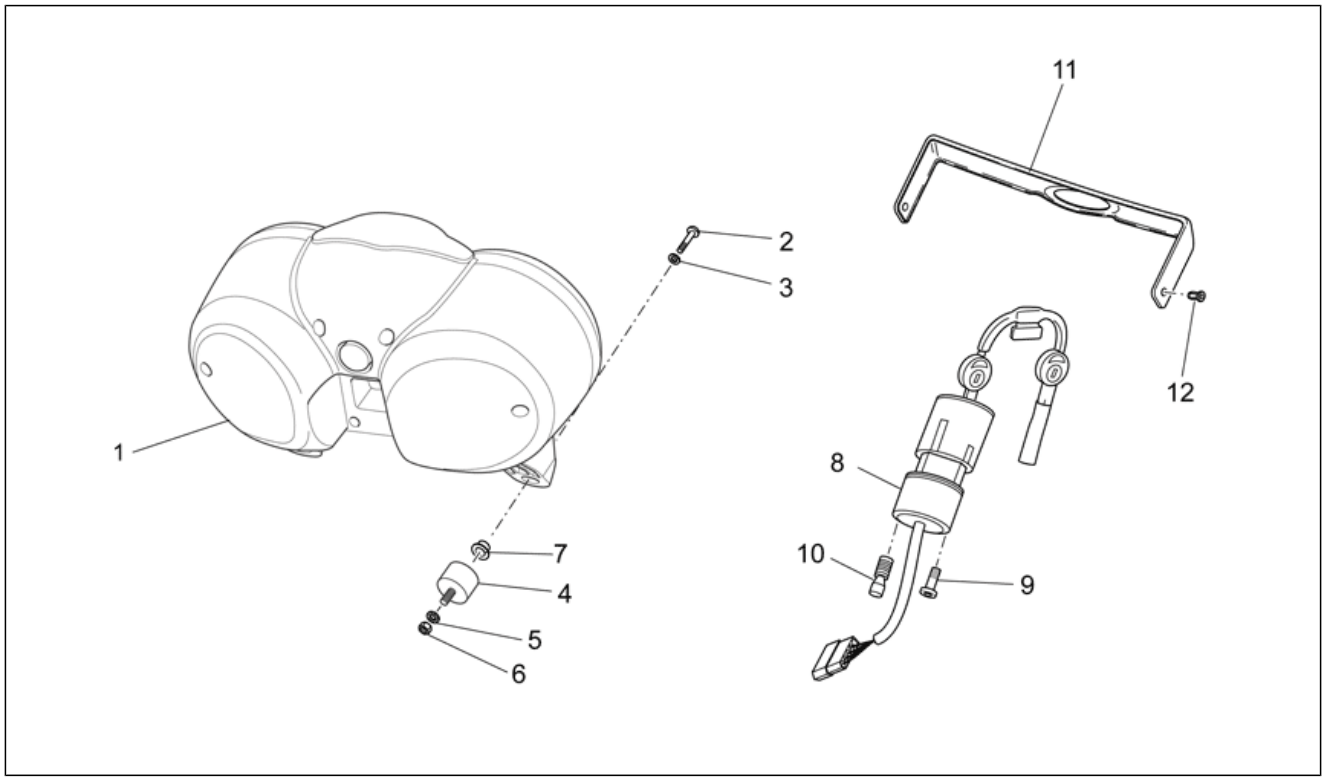

Pos.	Code	Description	Qty	Variants
1	887194	Dashboard complete km/h	1	**Country:**Australia[AUS], europe[EU]
1	887195	Dashboard complete MPH	1	**Country:**Great Britain[UK]
2	GU98370609	Hex socket screw M6x10	3	
3	GU95005306	Washer 6,4x13x1,5	3	
4	GU93222023	Silent-block	3	
5	GU95021206	Washer	3	
6	GU92606206	Nut	3	
7	AP8121032	Bush	3	
8	GU32782510	Main switch - steering lock	1	
9	GU98682416	Hex socket screw M8x16	1	
10	AP8150349	Special screw M8x15	1	
11	883569	Cover	1	
12	GU23922210	Pin	2	

Group	FRAME
Code	33.18
Description	Handlebar - Controls
Service	1

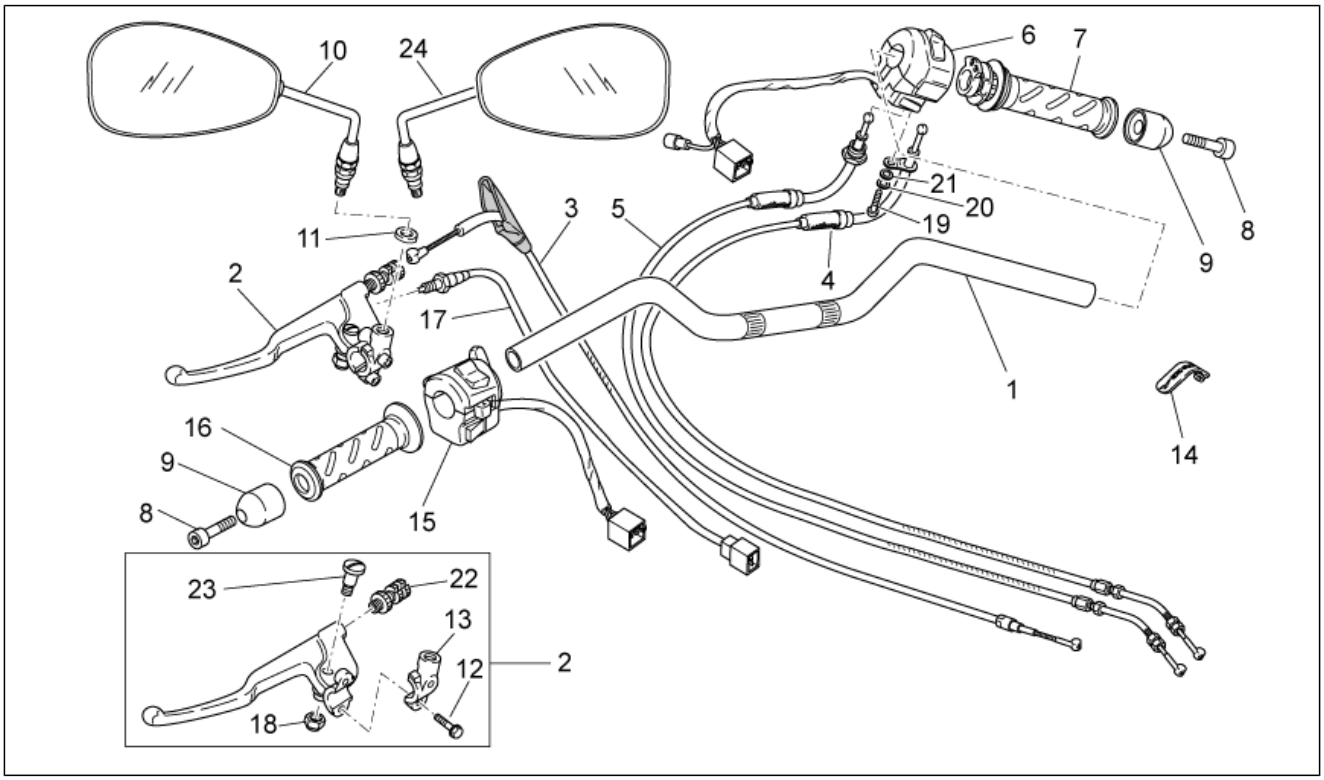

Pos.	Code	Description	Qty	Variants
1	2B000671	Handlebar	1	
2	GU32605510	Clutch lever	1	
3	B063427	Clutch cable	1	
4	887852	Gas trasmission delivery	1	
5	887853	Gas trasmission return	1	
6	B063135	RH lights selector	1	
7	GU32603310	RH hand grip	1	
8	GU98690335	Hex socket screw	2	
9	AP8104509	Anti.v weight, black	2	
10	2B001048	RH rearview mirror	1	
11	GU91181003	Spacer 10,25X20X4	2	
12	GU97202325	Black screw w/ flange M6x25	2	
13	GU30601060	Clump	1	
14	GU01609630	Hose clamp L46 mm	2	
14	GU03609600	Hose clamp L36 mm	1	
15	B063975	LH lights selector	1	
16	GU32603010	LH hand grip	1	
17	GU29759150	Lateral stand switch	1	
18	AP8213388	Self-locking nut	1	
19	GU98230510	Hex socket screw	1	
20	GU95008305	Washer 5,3X10X1	1	
21	GU95021105	Notched washer	1	
22	GU30602500	Register	1	
23	AP8213028	screw	1	
24	2B001049	LH rearview mirror	1	

Group	FRAME
Code	33.19
Description	Front brake system
Service	1

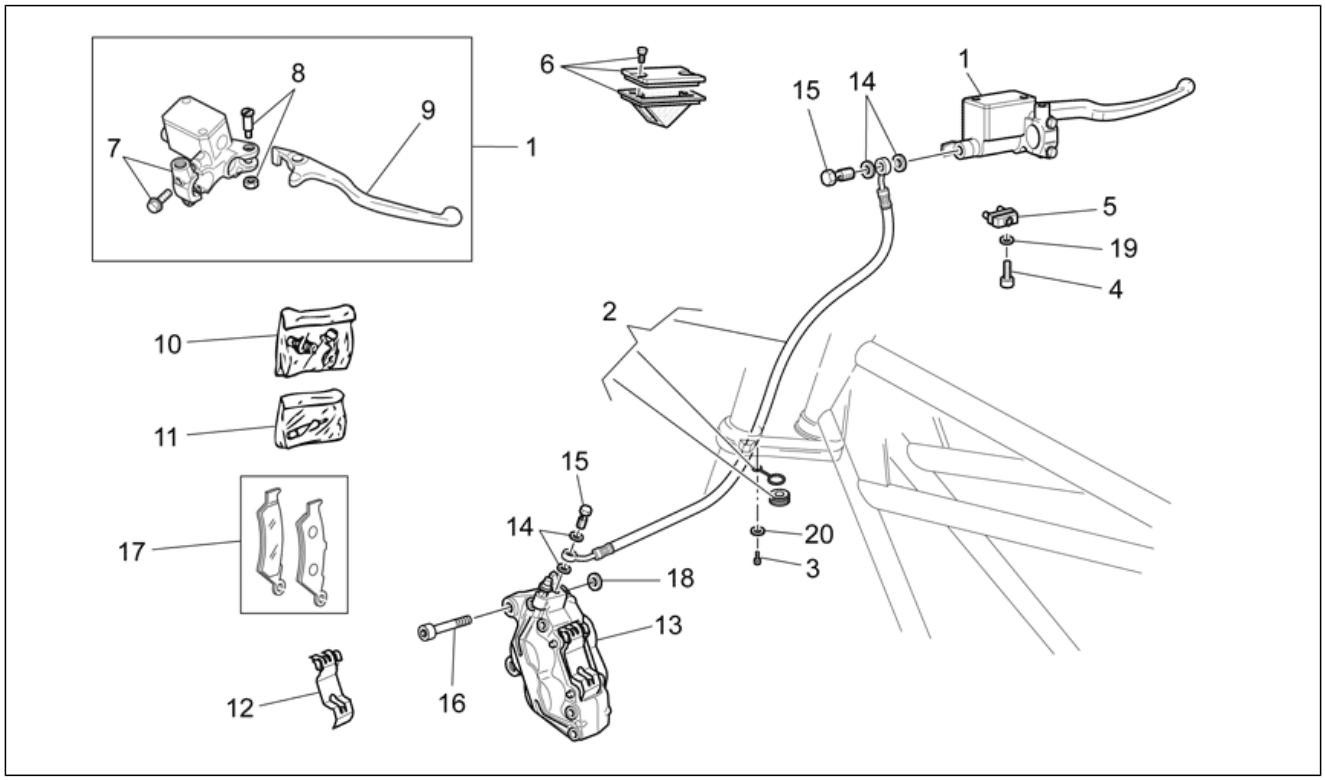

Pos.	Code	Description	Qty	Variants
1	GU03660145	Front master cilinder	1	
2	GU32657110	Brake hose	1	
3	AP8152277	Screw w/ flange M6x12	1	
4	GU98370412	Hex socket screw M4x12	1	
5	GU03749845	Stop switch	1	
6	GU03661145	Pump cover	1	
7	GU03664045	U-bolt	1	
8	GU03604845	Lever pin	1	
9	GU03605645	Brake lever	1	
10	GU05659230	Bleeder+cap	1	
11	GU01659130	Pins+Caliper springs	1	
12	GU01659131	Spring	1	
13	883303	LH front brake caliper, black	1	
14	AP8121915	Gasket	4	
15	978323	Oil pipe screw *	2	
16	AP8152385	Hex socket screw M10x1,25	2	
17	GU01654630	Pads pair	1	
18	GU91181003	Spacer 10,25X20X4	2	
19	GU95021104	Washer 4,3x8x1,5	1	
20	GU95008306	Washer 6,4x12x1,2	1	

Group	FRAME
Code	33.21
Description	Fuel pump
Service	1

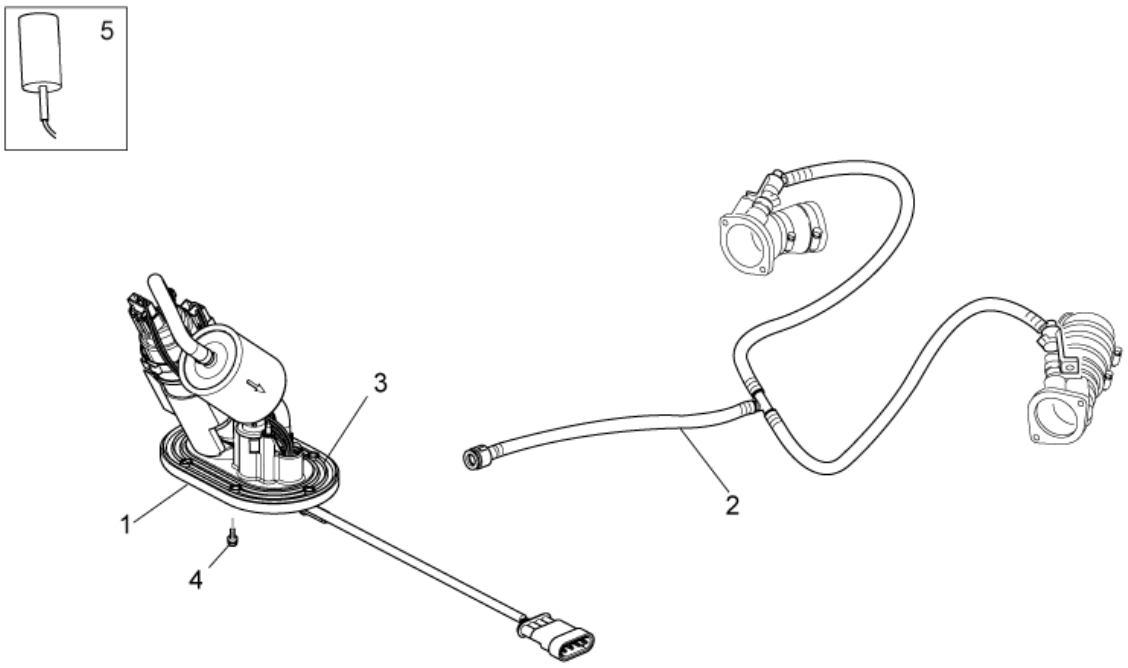

Pos.	Code	Description	Qty	Variants
1	B063752	Fuel pump	1	
2	2B000970	Fuel pipe	1	
3	GU05107430	Gasket	1	
4	AP8152273	Screw w/ flange M5X15	6	
5	887787	Fuel level sensor	1	

Group	FRAME
Code	33.22
Description	Air box
Service	1

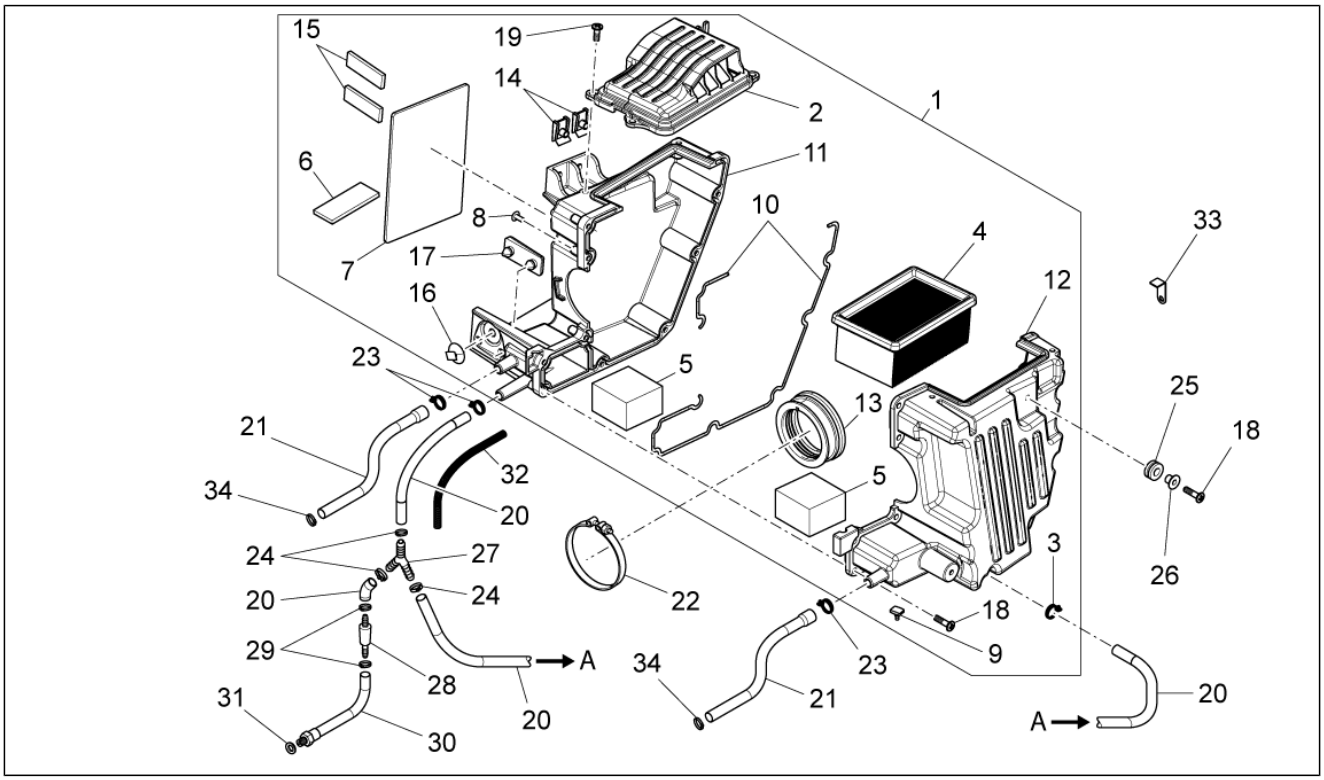

Pos.	Code	Description	Qty	Variants
1	8878421	Complete filter box	1	
2	887843	Air filter cover	1	
3	AP8201358	Hose clamp D 11,9	1	
4	AP8104924	Air filter	1	
5	AP8104525	Filter blow-by	2	
6	883127	Support rubber part 5mm	1	
7	AP8144553	Support rubber part	1	
8	AP8120876	Plug	2	
9	AP8120455	Rubber spacer	1	
10	AP8120615	Gasket D3	2	
11	887844	Filter box right shell	1	
12	887845	Filter box left shell	1	
13	887815	Intake hose	1	
14	254485	Spring plate M6	2	
15	AP8144538	Gasket	2	
16	890760	Instrument support	1	
17	AP8144729	Stand end stop	1	
18	AP8152329	Phillips screw, SWP M5x20	11	
19	AP8150509	Self-tap screw 5x14	4	
20	AP8120772	Breather pipe	3	
21	B063214	Blow-by pipe	2	
22	GU93305061	Hose clamp 61/65,5	1	
23	AP8102766	Hose clamp	3	
24	AP8102765	White hose clip D.13,5x6	3	
25	GU91551010	Rubber spacer	2	
26	AP8221023	T bush	2	
27	2B000045	3-way union	1	
28	AP8104996	Anti-return valve	1	

Group	FRAME
Code	33.22
Description	Air box
Service	1

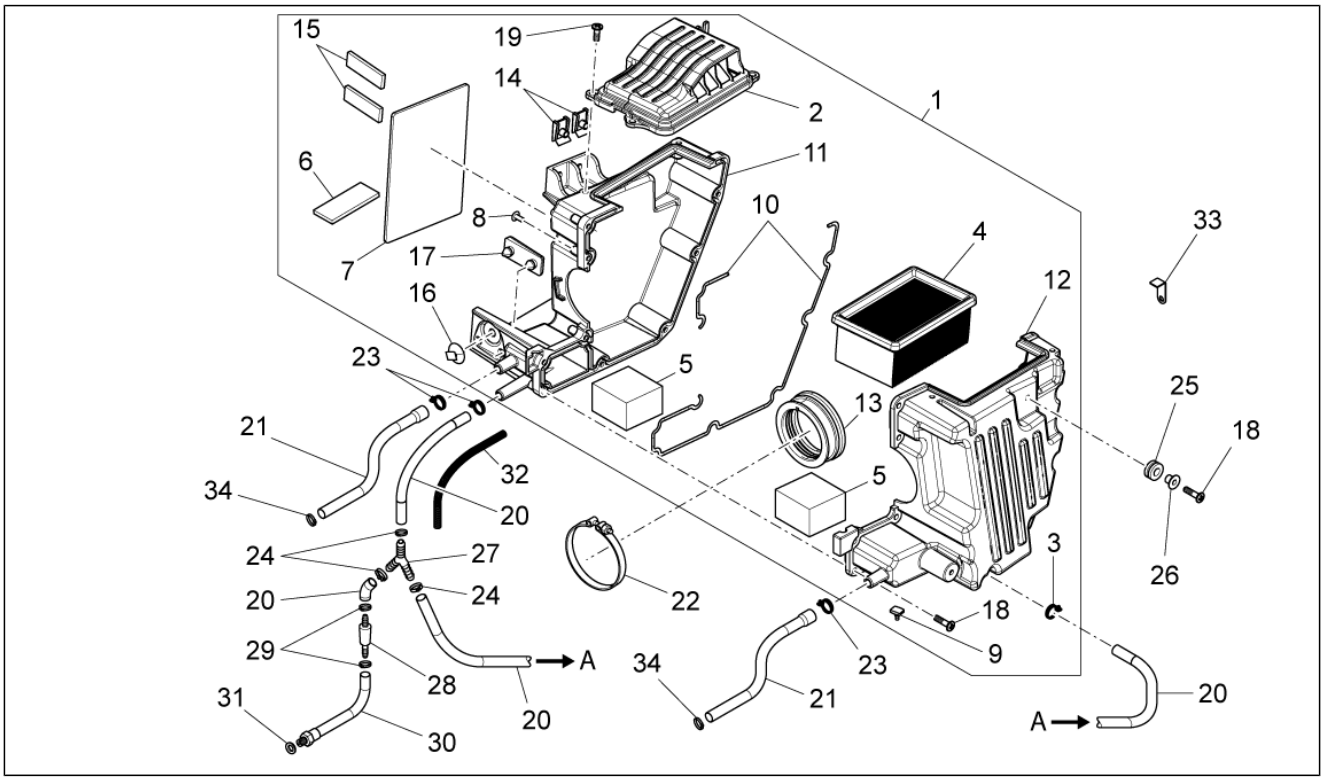

Pos.	Code	Description	Qty	Variants
29	GU28157950	Hose clip 12,5x8	2	
30	B063213	Breather	1	
31	GU90714082	Gasket	1	
32	GU00823923140	Thermal sheath	1	
33	GU31112965	Square	1	
34	AP8201358	Hose clamp D 11,9	2	

Group	FRAME
Code	33.23
Description	Exhaust unit
Service	1

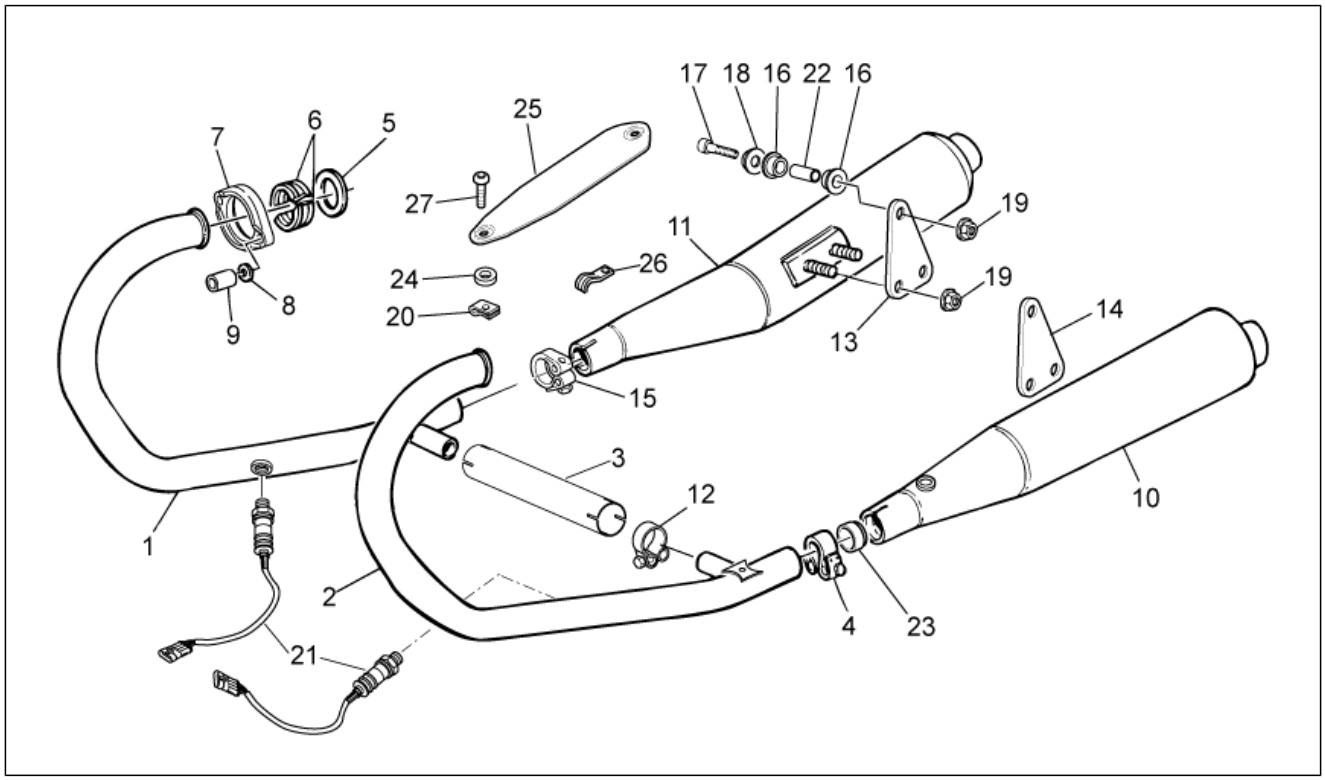

Pos.	Code	Description	Qty	Variants
1	887846	RH exhaust pipe	1	**Country:**Australia[AUS], China[CN], europe[EU], Japan[J], Great Britain[UK]
1	B063854	RH exhaust pipe	1	**Country:**Japan[J]
2	887847	LH exhaust pipe	1	**Country:**Australia[AUS], China[CN], europe[EU], Japan[J], Great Britain[UK]
2	B063855	LH exhaust pipe	1	**Country:**Japan[J]
3	B063022	Exhaust manifold union	1	
4	883294	LH silencer clamp	1	
5	GU19025280	Gasket	2	
6	GU19025460	Spacer	4	
7	GU32121010	Ring nut	2	
8	GU03013800	Washer 6,4x12	4	
9	GU31121880	Nut	4	
10	2B000177	LH silencer	1	
11	2B000176	RH silencer	1	
12	978385	Hose clamp	2	
13	883297	RH plate	1	
14	883298	LH plate	1	
15	883293	RH silencer clamp	1	
16	AP8144071	Rubber exhaust	4	
17	GU98690440	screw TCEI M8x40	2	
18	AP8134378	Silencer fixing bush	2	
19	GU92640508	Nut M8	6	
20	254485	Spring plate M6	2	
21	896110	Lamda sensor l.660 mm	2	
22	AP8121072	Spacer	2	
23	GU91113826	Bushing	2	
24	AP8120870	Insulating washer	4	

Group	FRAME
Code	33.23
Description	Exhaust unit
Service	1

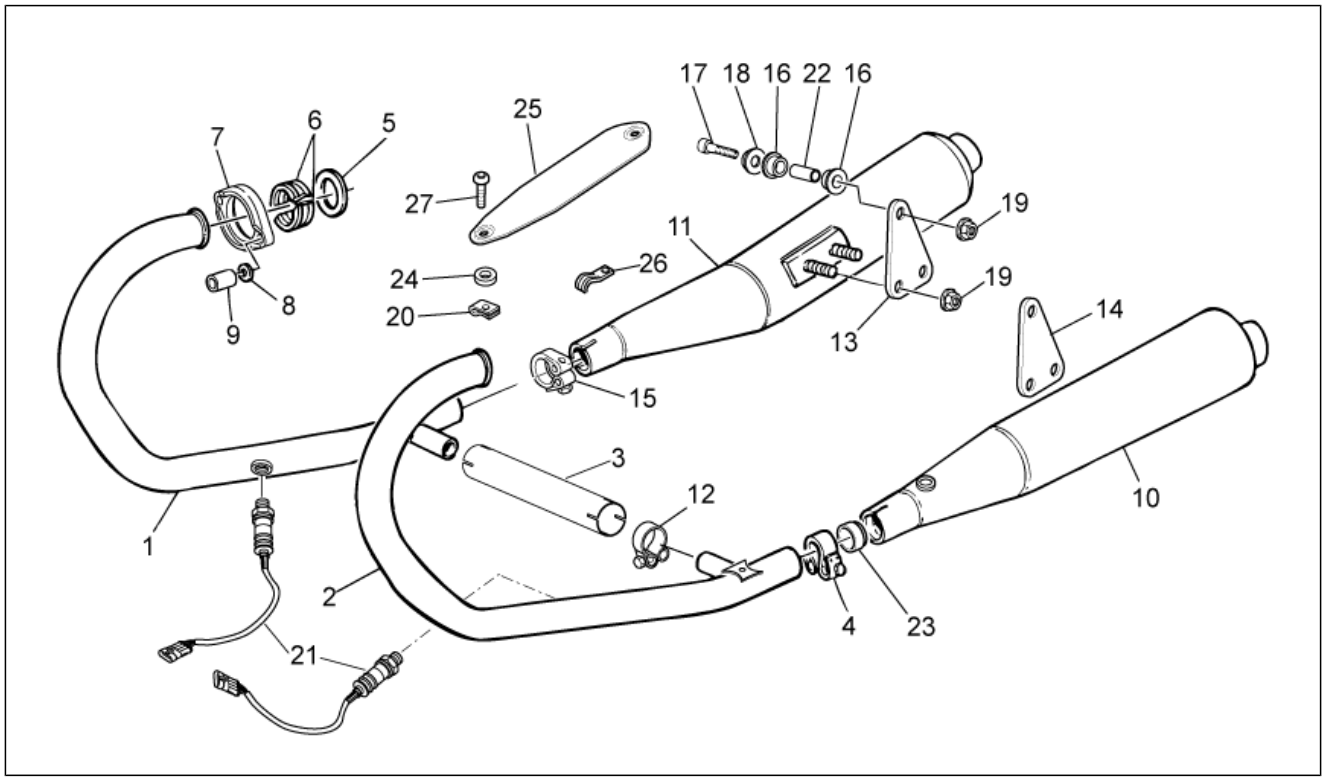

Pos.	Code	Description	Qty	Variants
25	883704	Exhaust pipe heat prot.	2	
26	GU93301175	U-bolt	1	
27	GU98210612	Screw w/ flange M6x12	4	

Group	FRAME
Code	33.26
Description	Rear master cylinder
Service	1

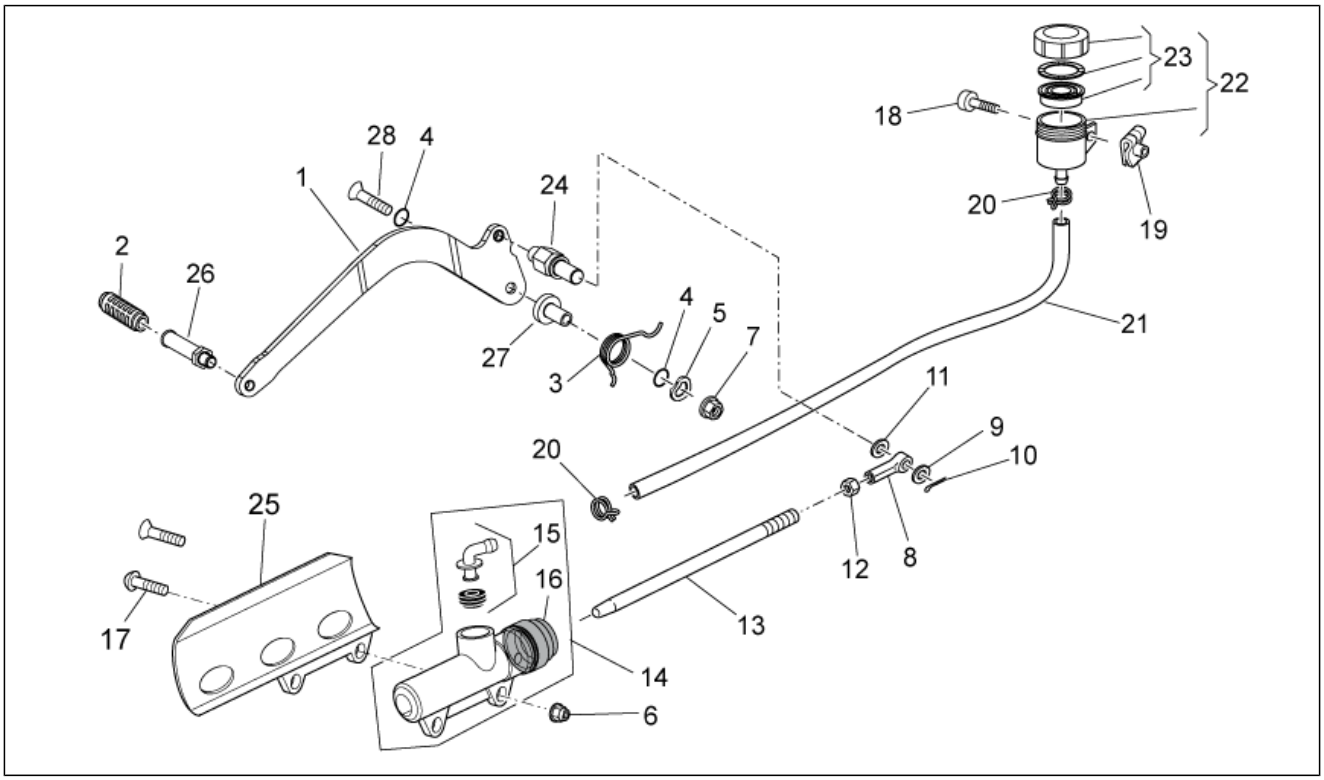

Pos.	Code	Description	Qty	Variants
1	887910	Brake lever	1	
2	AP8120912	Lever rubber	1	
3	978969	Spring	1	
4	AP8144007	O-ring 11,11x1,78	2	
5	GU95005310	Washer 8,4x18x2	1	
6	GU92630206	Nut M6x1	2	
7	GU92660021	Flanged nut M8	1	
8	GU18257551	Block	1	
9	GU95005308	Washer 8,4x14,57x1,6	1	
10	GU95500221	Split pin	1	
11	658837	Crinkle washer D15 F8,4 S1,5 - INOX	1	
12	GU92609007	Nut	1	
13	978970	Master cylinder rod	1	
14	AP8133643	Rear master cylinder	1	
15	AP8213057	Rear brake pump union	1	
16	AP8113288	Rubber bellows	1	
17	GU98370625	Hex socket screw	2	
18	AP8152298	Screw w/ flange M5x16	1	
19	248419	Spring plate m5	1	
20	AP8101594	Hose clamp D10,1*	2	
21	GU00823950050	Oil pipe	1	
22	AP8113241	Brake oil tank complete	1	
23	AP8113553	Tank cap	1	
24	887911	Brake lever pin	1	
25	GU01665410	Brake m.cyl.protection, black	1	
26	887908	Rubber pedal	1	
27	887952	Rear brake lever bush	1	
28	B063443	Screw M8x50	1	

Group	FRAME
Code	33.27
Description	Rear brake caliper
Service	1

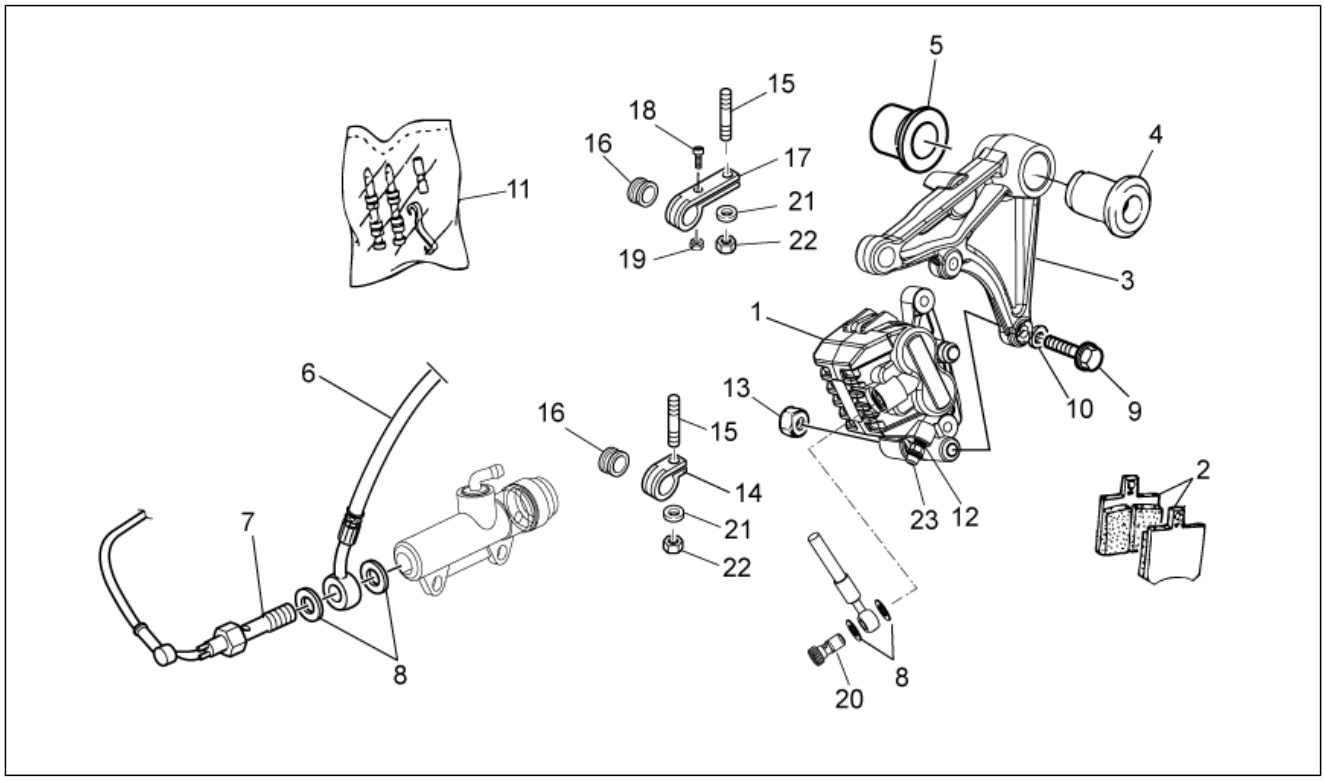

Pos.	Code	Description	Qty	Variants
1	887449	Rear brake caliper	1	
2	AP8133798	Pads pair	1	
3	887431	Brake caliper support plate	1	
4	GU31634281	Bushing	1	
5	GU32634160	Spacer	1	
6	B063750	Rear rubber brake pipe	1	
7	883192	Switch	1	
8	AP8121915	Gasket	4	
9	AP8152288	Screw w/ flange	2	
10	GU03270300	Washer 8,4x15	2	
11	AP8133799	Pins+Caliper springs	1	
12	AP8133800	Air bleed valve	1	
13	AP8152300	Self-locking nut M8	2	
14	GU03658430	Hose clamp	1	
15	GU96451316	Stud bolt	1	
16	GU03658201	Ring	2	
17	GU03658330	Hose clamp	1	
18	AP8152043	Hex socket screw M4x10	1	
19	AP8150204	Nut M4	1	
20	AP8113003	Oil pipe screw *	1	
21	GU95008306	Washer 6,4x12x1,2	2	
22	AP8152299	Self-locking nut M6	2	
23	AP8213575	Bleed valve cap	1	

Group	FRAME
Code	33.28
Description	Front lights
Service	1

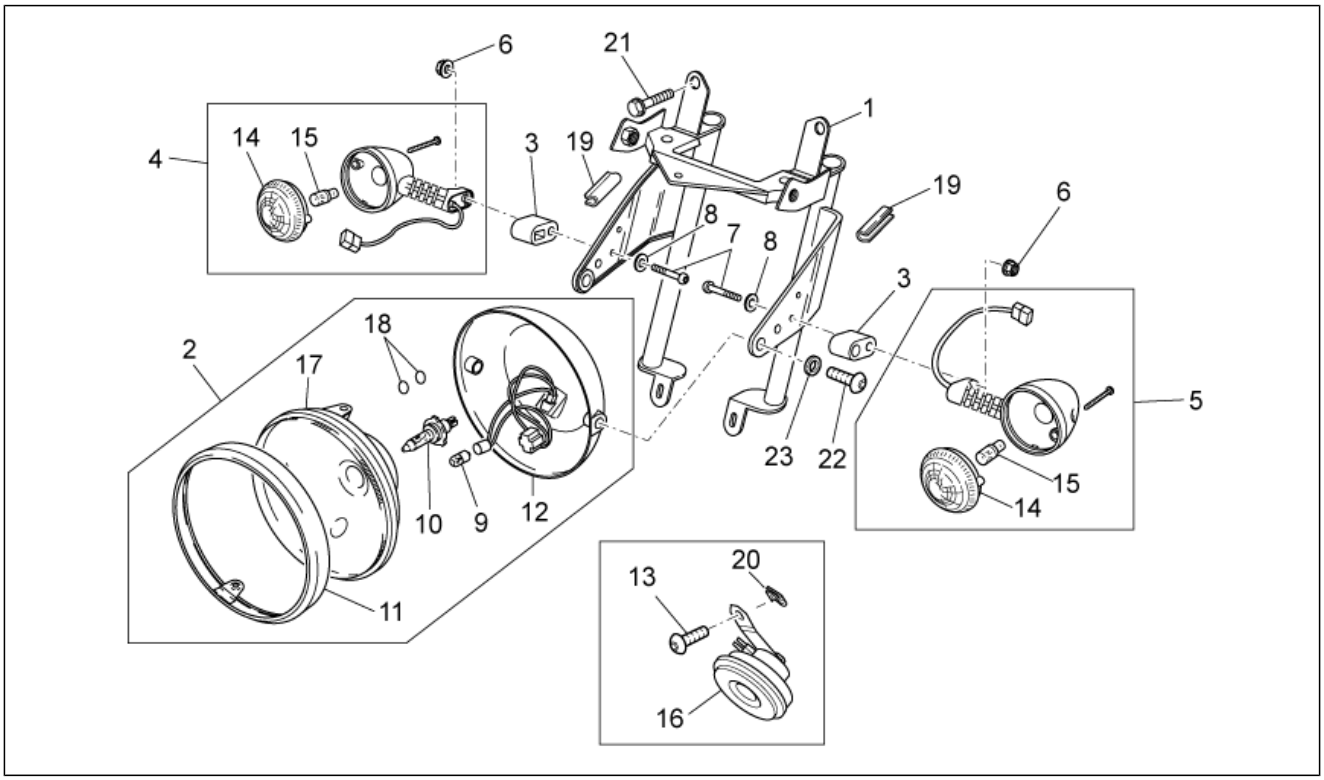

Pos.	Code	Description	Qty	Variants
1	GU32506360	Headlight support clamp	1	
2	978311	Headlight	1	
2	978662	Cpl headlightsteering headligh	1	**Country:**Australia[AUS], Japan[J]
3	GU32753410	Spacer	2	
4	887826	RH front/LH rear turn indic.	1	
5	887827	LH front/RH rear turn indic.	1	
6	GU92787006	Cap nut M6x1	2	
7	GU98370655	Hex socket screw	2	
8	GU95021206	Washer	2	
9	GU93450105	Lamp	1	
10	GU93450232	Lamp 12V-55/60W	1	
11	GU31740383	Chromed ring nut	1	
12	981149	Cap, black	1	
13	AP8150377	screw	2	
14	B063735	Turn indicator lens	2	
15	GU93450126	Lamp, orange	2	
16	890979	Horn	1	
17	GU06740400	Light assembly	1	
18	883417	O-ring	2	
19	GU00823931055	Gasket	1	
20	254485	Spring plate M6	2	
21	GU98880540	screw M10x40	2	
22	GU98692420	Hex socket screw M8x20	2	
23	GU95005308	Washer 8,4x14,57x1,6	2	

Group	FRAME
Code	33.29
Description	Rear lights
Service	1

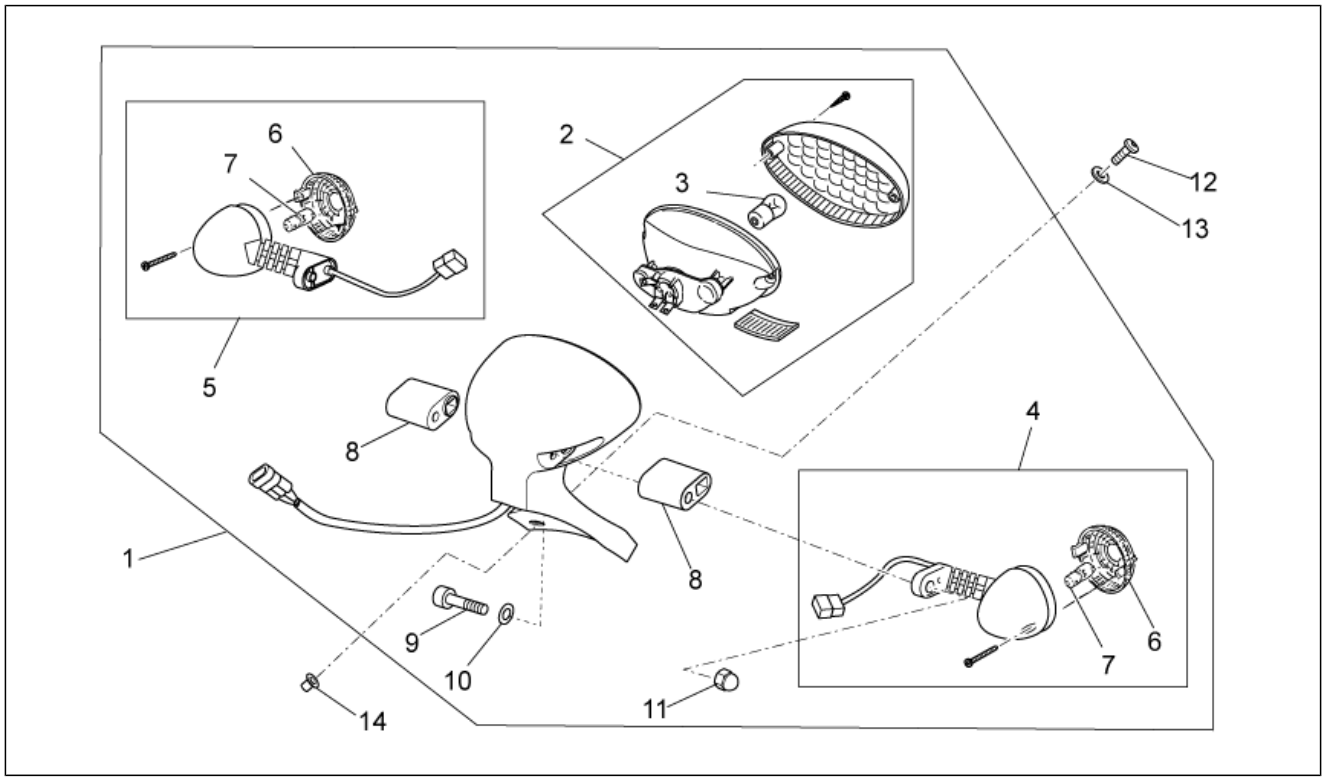

Pos.	Code	Description	Qty	Variants
1	887877	Taillight assy	1	
2	GU03740930	Taillight	1	
3	GU93450224	Lamp	1	
4	887826	RH front/LH rear turn indic.	1	
5	887827	LH front/RH rear turn indic.	1	
6	B063735	Turn indicator lens	2	
7	GU93450126	Lamp, orange	2	
8	GU32753410	Spacer	2	
9	GU98370655	Hex socket screw	2	
10	GU95021206	Washer	2	
11	GU92787006	Cap nut M6x1	2	
12	GU98350215	Hex socket screw	3	
13	GU30577800	Nylon washer 5,5X12X1	3	
14	GU93231605	Antivibration bush	3	

Group	FRAME
Code	33.30
Description	Electrical system I
Service	1

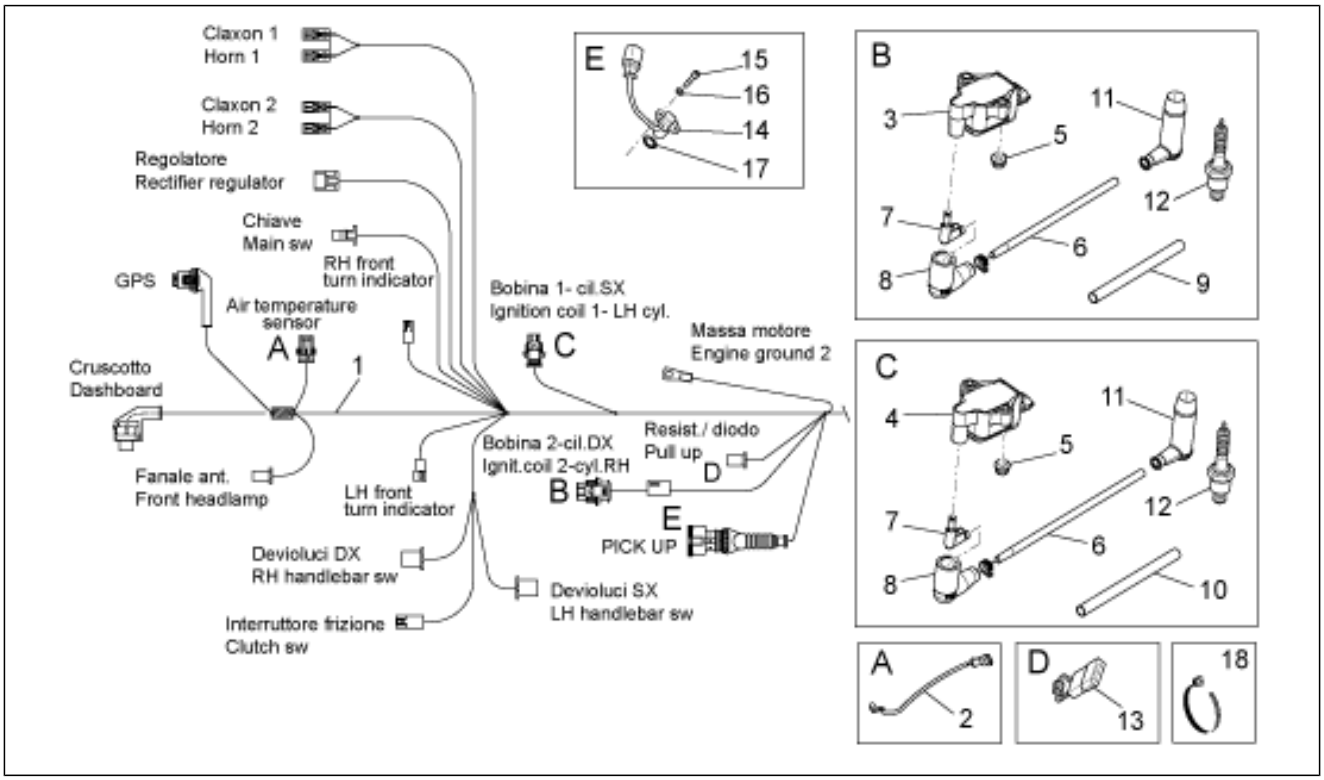

Pos.	Code	Description	Qty	Variants
1	887825	Main wiring harness	1	
2	AP8124936	Air temp. Sensor	1	
3	642034	HT coil DX	1	
4	641901	HT coil	1	
5	AP8152299	Self-locking nut M6	4	
6	080341	H.V. cable	2	
7	641725	HV terminal	2	
8	641040	Insulating cap	2	
9	CM0074D0	Sheath D.8-S.0,5-L.370	1	
10	CM0074C9	Grey cable casing D.8-S.0,5-L.435	1	
11	GU02717450	Sparkplug cap NGK	2	
12	887481	Spark plug NGK CPR8EB-9	2	
13	887948	Diode	1	
14	832029	Encoder sensor	1	
15	GU98682212	Hex socket screw M5x12	2	
16	GU95008205	Washer 5,3x10x0,8	2	
17	GU90706141	O-ring	1	
18	AP8120416	Black hose 178x4	1	
18	GU14609650	Hose clamp 3,6x20,6	31	
18	GU49609601	Hose clamp 2,4x92	1	

Group	FRAME
Code	33.31
Description	Electrical system II
Service	1

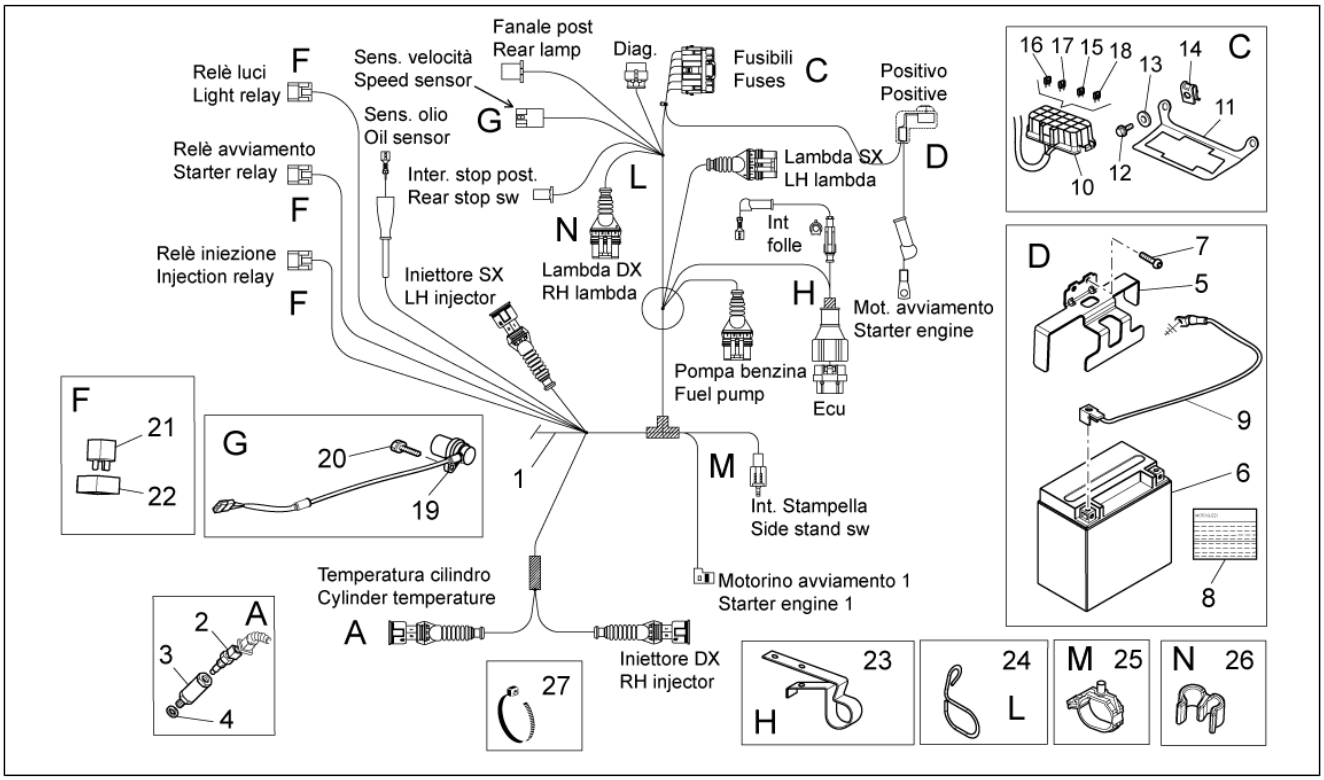

Pos.	Code	Description	Qty	Variants
1	887825	Main wiring harness	1	
2	GU29729461	Oil temperature sensor	1	
3	GU03163330	Sensor support	1	
4	GU95004210	Washer 10,2x18x2	1	
5	B063233	Battery bracket	1	
6	638733	Battery Yuasa 12V-12Ah (150x85x145)	1	
7	GU98370616	Hex socket screw M6x16 inox	2	
8	GU32517710	Decal "Battery service"	1	
9	GU32747910	Ground-battery lead	1	
10	584211	Fuse holder box	1	
11	883161	Fuse block support	1	
12	GU98682212	Hex socket screw M5x12	2	
13	GU95100059	Washer 5,25x14x1,5	2	
14	AP8102375	Clip m5	2	
15	CM225705	Fuse 5A	2	
16	CM225710	Fuse 10A	1	
17	CM225715	Fuse 15A	2	
18	CM225730	Fuse 30A	1	
19	893570	Speedometer sensor cpl.	1	
20	AP8150377	screw	1	
21	AP8224462	Relay 12V/30A	3	
22	AP8220283	Rubber spacer *	3	
23	B043850	Hose clamp	1	
24	AP8181140	Fairlead	1	
25	CM013202	Pipes/cables retainer spring	1	
26	894704	Fairlead	1	
27	AP8120416	Black hose 178x4	1	
27	GU14609650	Hose clamp 3,6x20,6	21	

Group	FRAME
Code	33.31
Description	Electrical system II
Service	1

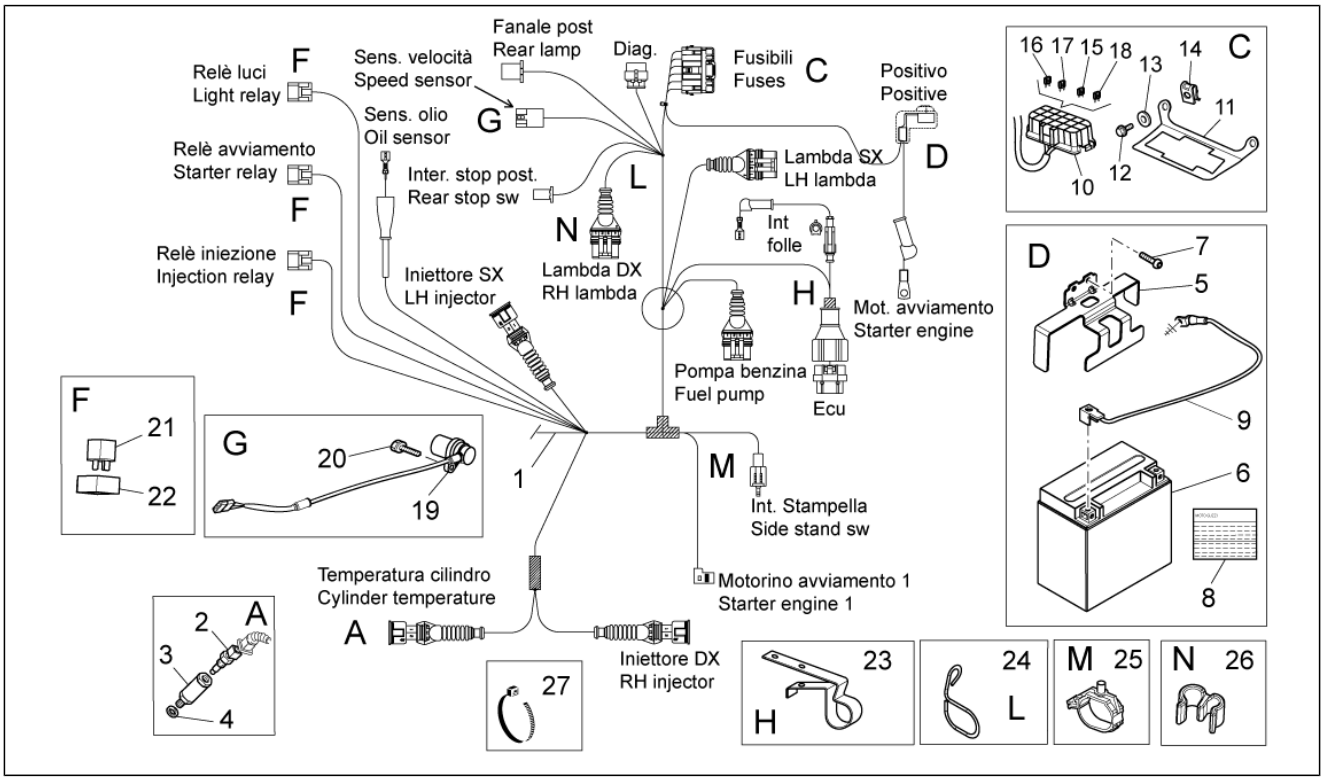

Pos.	Code	Description	Qty	Variants
27	GU49609601	Hose clamp 2,4x92	1	

Group	FRAME
Code	33.32
Description	Lock hardware kit
Service	1

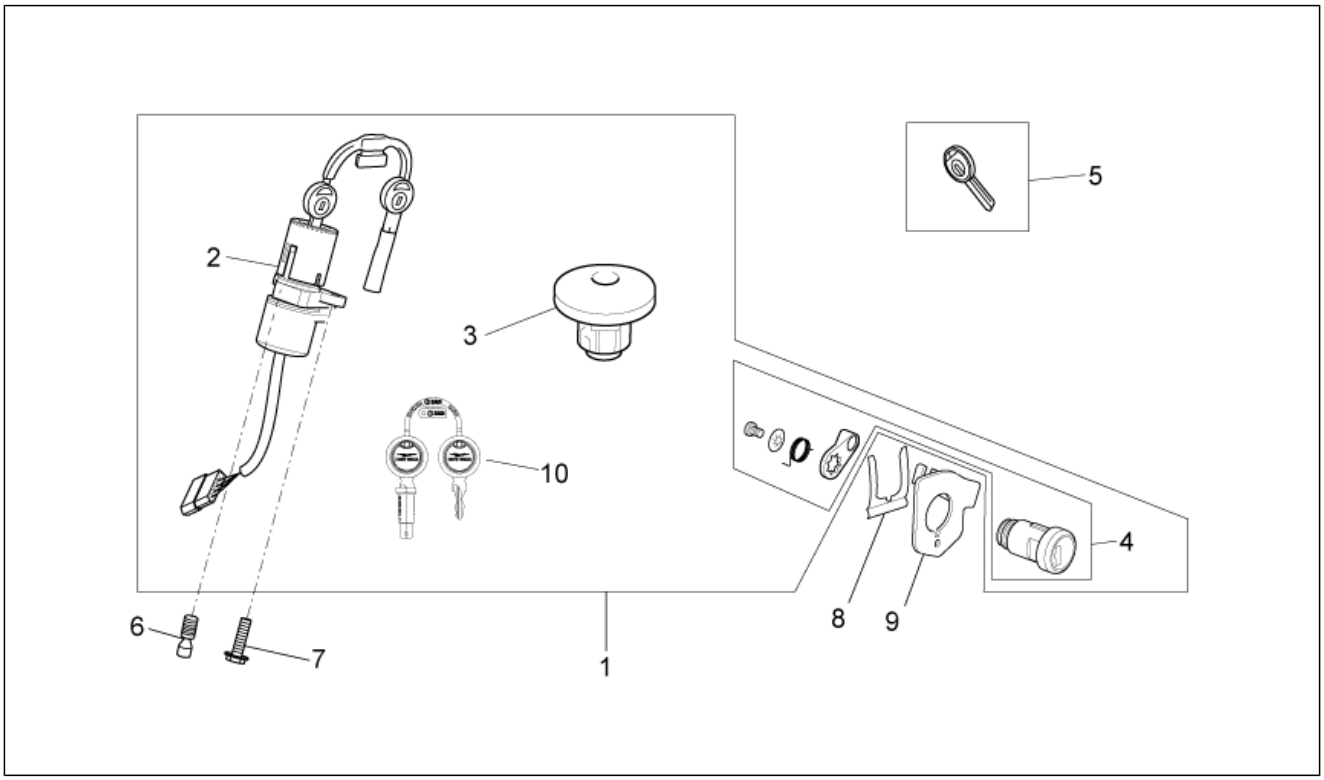

Pos.	Code	Description	Qty	Variants
1	883477	Lock kit	1	**Country:**China[CN]
1	887873	Lock kit	1	
2	GU32782510	Main switch - steering lock	1	
3	883476	Tank cap	1	**Country:**China[CN]
3	887874	Tank cap	1	
4	977527	Locking complete with keys	1	
5	GU32735510	Non indent.key blank-shell go	1	
6	AP8150349	Special screw M8x15	1	
7	GU98682416	Hex socket screw M8x16	1	
8	AP8121420	Fork spring	1	
9	978415	Cable fixing plate	1	
10	2D000006	Locking cylinder with key for fuel cap	1	

Group	FRAME
Code	33.33
Description	Decal and plate set
Service	1

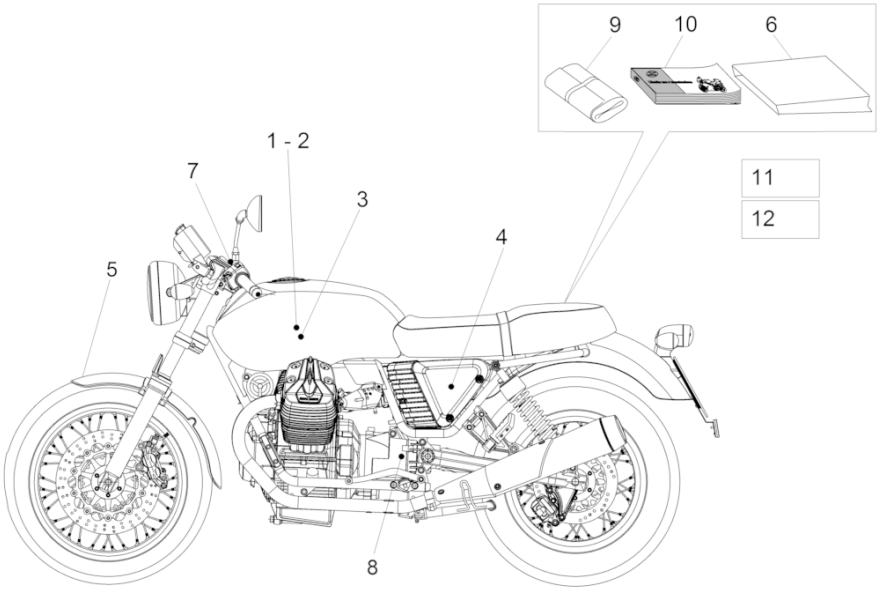

Pos.	Code	Description	Qty	Variants
1	886340	Name plate Aquila	1	**Vehicle colour:**Diablo Black[ND], Rosso Ventone[RV], Verde Raptor opaco [VR]
2	887930	LH Name plate Aquila	1	**Vehicle colour:**Diablo Black[ND], Rosso Ventone[RV], Verde Raptor opaco [VR]
3	2H000413	Decal Moto Guzzi dx-sx	2	**Vehicle colour:**Diablo Black[ND], Rosso Ventone[RV], Verde Raptor opaco [VR]
4	2H000389	Fairing decal dx-sx V7	2	**Vehicle colour:**Diablo Black[ND], Rosso Ventone[RV], Verde Raptor opaco [VR]
5	886141	Decal "Aquila"	1	**Vehicle colour:**Diablo Black[ND], Rosso Ventone[RV], Verde Raptor opaco [VR]
6	GU05900130	Bag for document	2	
7	883598	"Aquila" decal	1	**Vehicle colour:**Diablo Black[ND], Rosso Ventone[RV], Verde Raptor opaco [VR]
8	895839	"""Eni"" label"	2	
9	887443	Toolkit	1	
10	2Q000043	Operator's handbook I-F-D-NL-E-UK	1	
10	2Q000045	Libretto uso e manutenzione JP-EN	1	**Country:**Japan[J]
10	2Q000054	Libretto uso e manutenzione ZN-EN-IT-DE	1	**Country:**China[CN]
11	2G000013	Shed scheme decal	1	**Country:**China[CN]
11	GU03995730	Decal "Unleaded Fuelonly"	1	**Country:**Australia[AUS]
12	GU32944310	Guard decal	2	

Group	FRAME
Code	33.34
Description	Front wheel II
Service	1

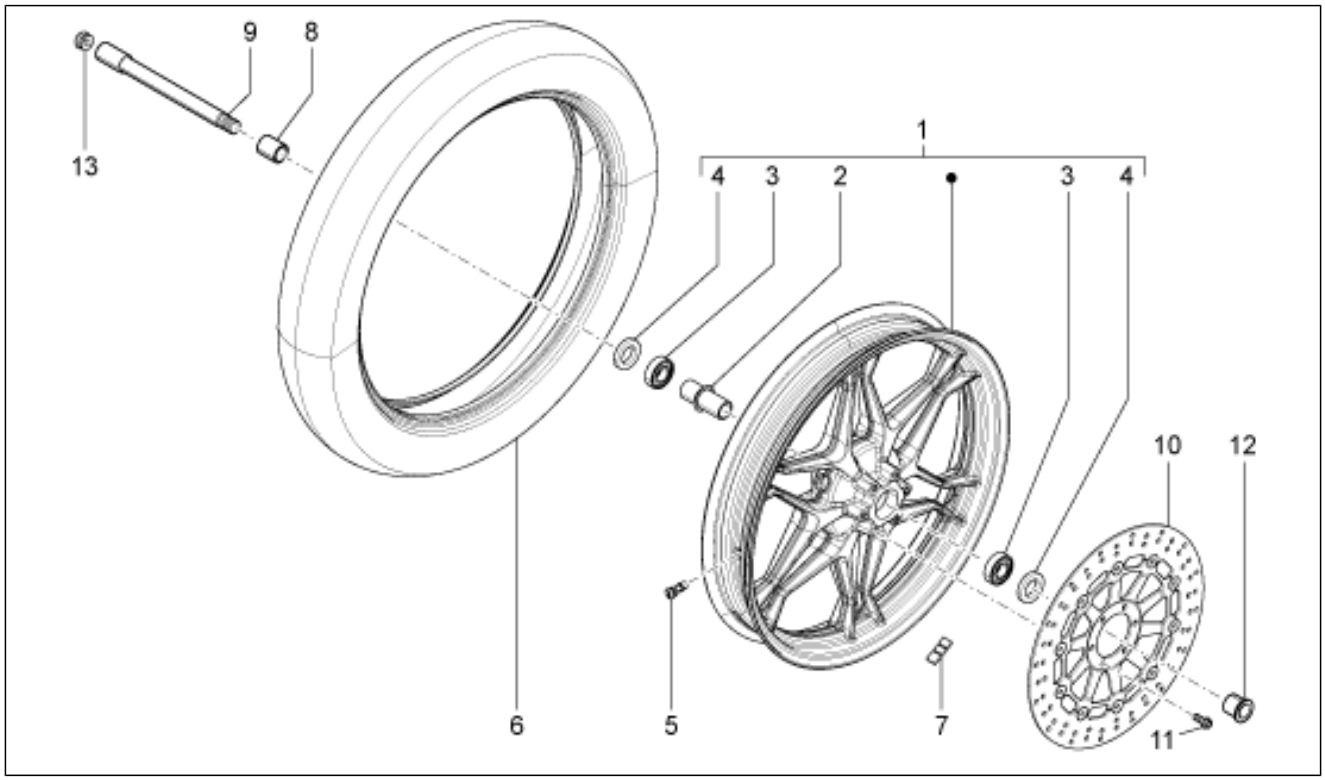

Pos.	Code	Description	Qty	Variants
1	887571	Wheel 2.5X18"	1	
2	GU31615283	Spacer	1	
3	GU92204221	Bearing	2	
4	GU90402642	Gasket ring	2	
5	GU03617710	Tubeless tyre valve	1	
6	886679	Tyre 100/90 18	1	
7	GU14616150	Counterweight	1	
8	GU32615660	RH spacer	1	
9	GU31614183	Front wheel spindle	1	
10	883688	Front brake disc 320	1	
11	AP8152286	Screw w/ flange M8x20	6	
12	GU31616384	LH spacer	1	
13	GU93180111	Cover 15 mm	1	

Group	FRAME
Code	33.35
Description	Rear wheel II
Service	1

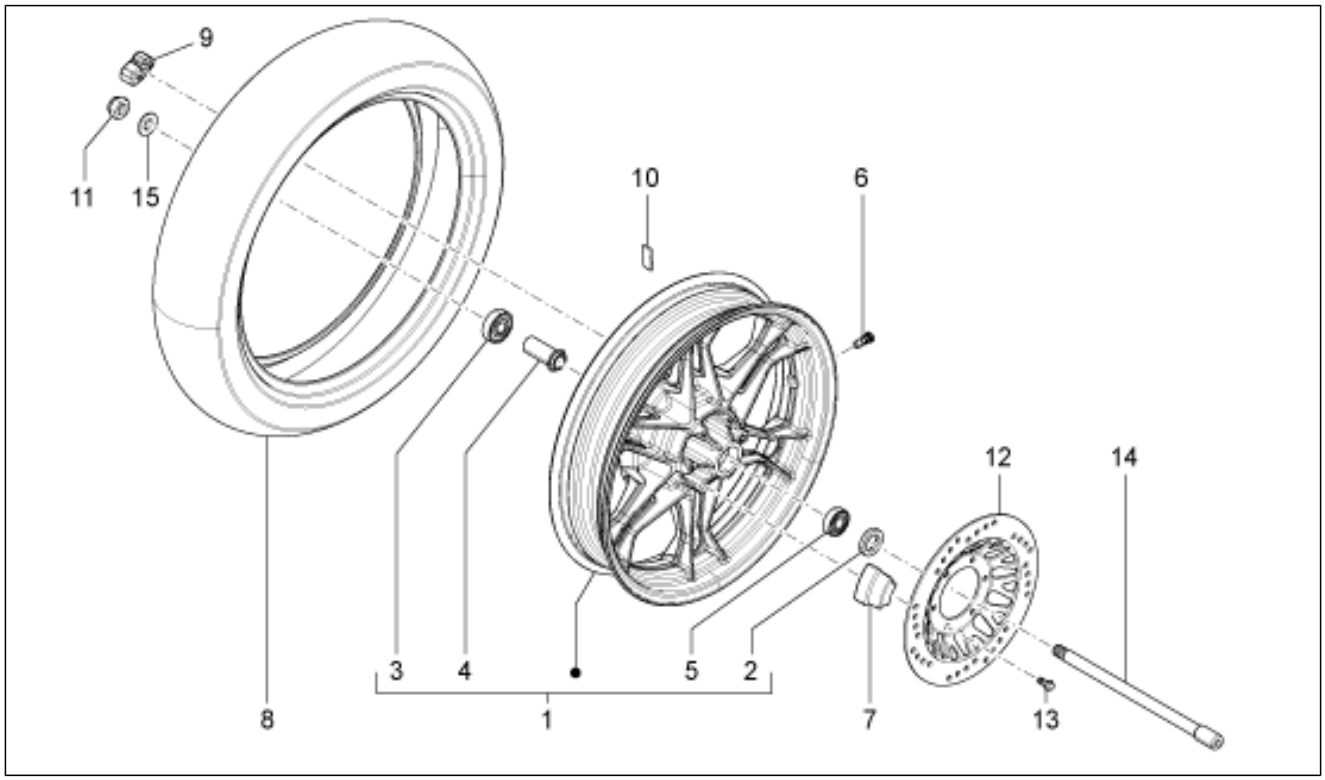

Pos.	Code	Description	Qty	Variants
1	887573	Wheel rim 3.5x17"	1	
2	GU90402538	Gasket ring 25x40x7	1	
3	GU92204218	Bearing	1	
4	GU27633910	Spacer	1	
5	GU92204217	Bearing	1	
6	GU03617710	Tubeless tyre valve	1	
7	GU32636160	Support rubber part	1	
8	886680	Tyre 130/80 17	1	
9	GU32632510	Rubber coupling	6	
10	GU14616150	Counterweight	1	
11	GU92606316	Nut M16x1,5	1	
12	887448	Brake disc	1	
13	894505	Screw w/ flange M8x18	6	
14	GU32633360	Rear wheel spindle	1	
15	GU31634481	Washer	1	

Group	FRAME
Code	33.48
Description	Fuel vapour recover system
Service	1

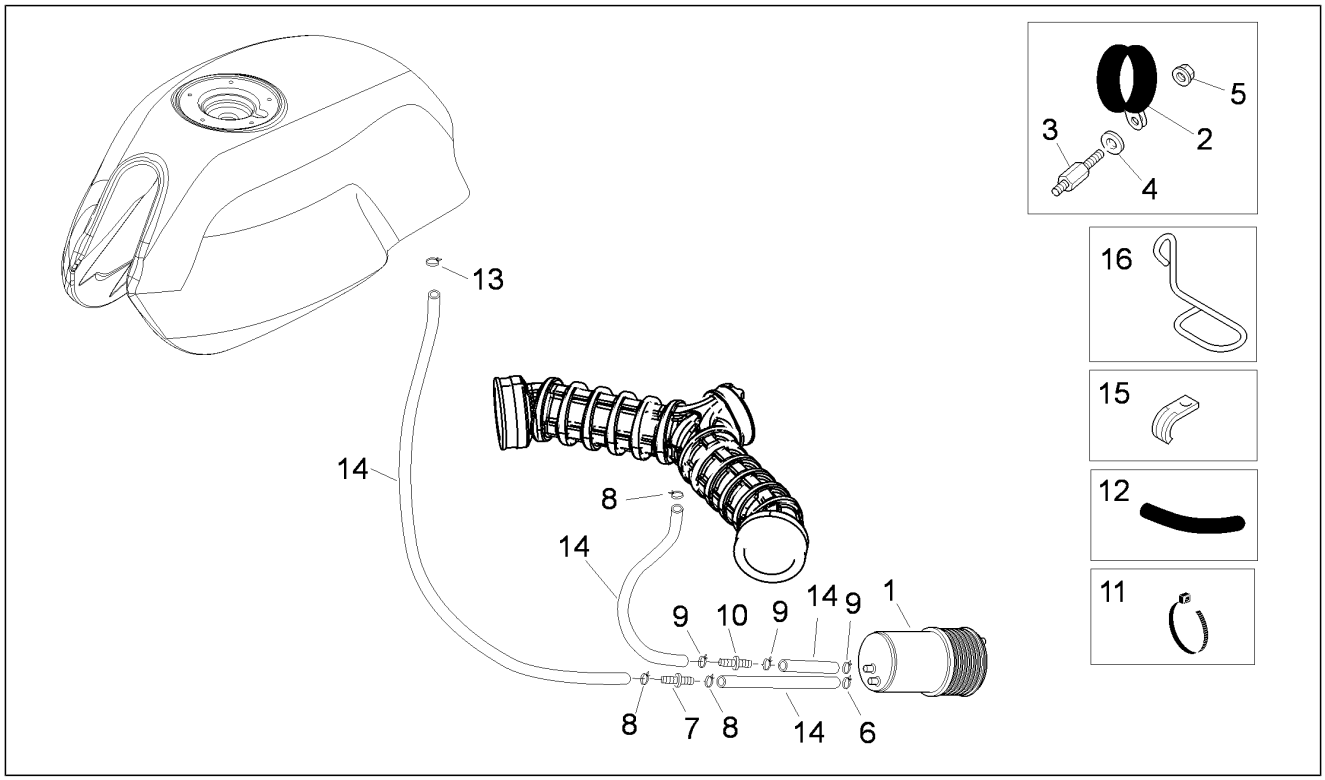

Pos.	Code	Description	Qty	Variants
1	AP8102678	Carbon filter	1	
2	AP8102688	Hose clamp d.76	1	
3	GU32439260	Canister support USA	1	
4	GU95005308	Washer 8,4x14,57x1,6	1	
5	AP8152299	Self-locking nut M6	1	
6	AP8102159	Hose clamp	1	
7	860138	Valve	1	
8	GU28157950	Hose clip 12,5x8	4	
9	AP8120446	Hose clip, green D11x6,6x1	2	
10	AP8121267	Choke hold	1	
11	AP8120416	Black hose 178x4	1	
12	GU00823923140	Thermal sheath	4	
13	AP8201358	Hose clamp D 11,9	1	
14	856063	pipe SAE 30 d.12,7x6,35	3	
15	GU93301313	U-bolt	1	
16	AP8221114	Cable-guide	2	

Group	ENGINE
Code	34.09
Description	Transmission complete I
Service	1

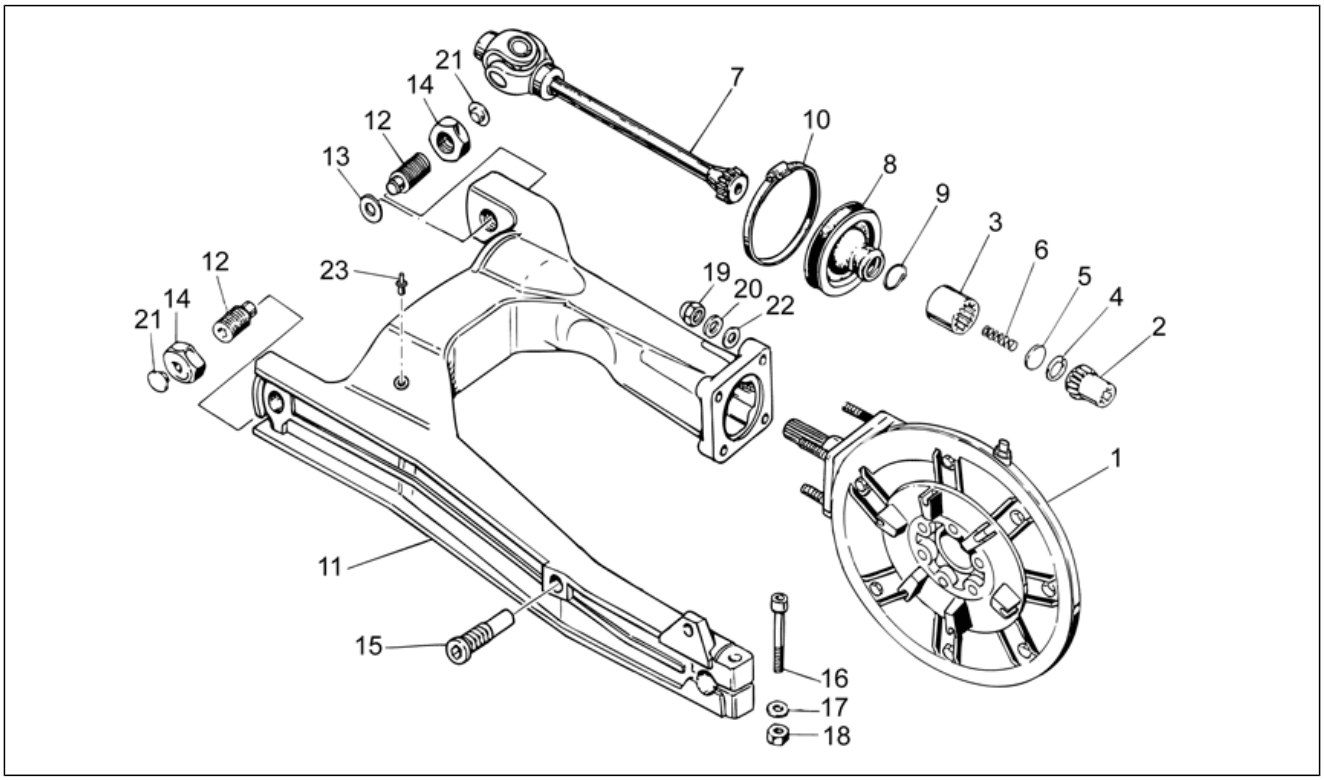

Pos.	Code	Description	Qty	Variants
1	976941	Transmission box assy., black	1	
2	GU31327783	Hose	1	
3	GU19328801	Hose	1	
4	GU90272023	Circlip	1	
5	GU19327601	Disc	1	
6	GU94321099	Spring	1	
7	GU23328081	Coupling	1	
8	GU23548080	Protection collar	1	
9	GU23548180	Spring	1	
10	AP8120246	Hose clamp D=60-80	1	
11	883011	Swing arm, black	1	
12	GU19547000	Pin	2	
13	GU35214300	Spacer	1	
14	GU31547882	Nut	2	
15	GU31544181	Pin	1	
16	GU98680545	screw M10x45	1	
17	GU95008210	Washer 10,2X18X2	1	
18	GU92606210	Nut M10x1,5	1	
19	860651	Cap nut M8x1,25	4	
20	GU14615901	Washer 8,4X13X0,8	4	
21	GU93180105	Cover	2	
22	GU95005308	Washer 8,4x14,57x1,6	4	
23	GU03922280	Cover 5x9	1	

Group	ENGINE
Code	34.10
Description	Transmission complete II
Service	1

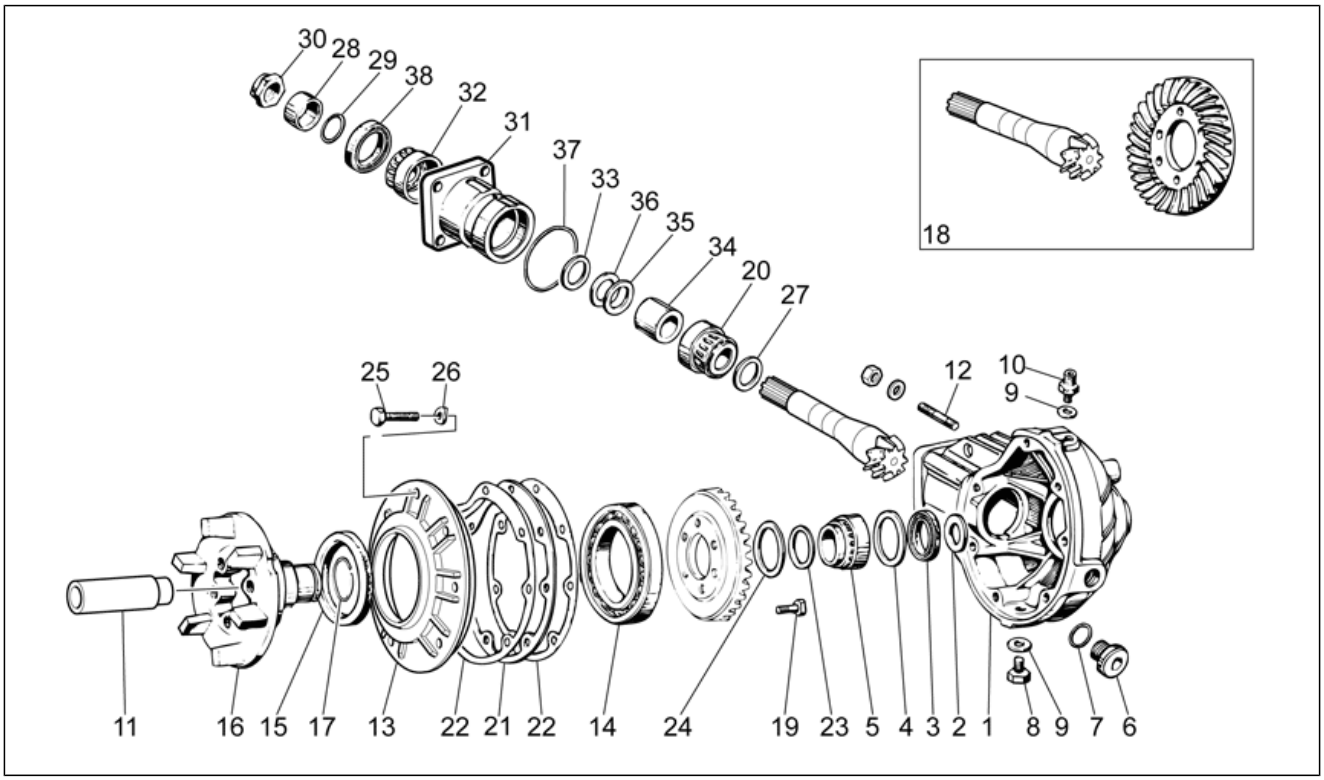

Pos.	Code	Description	Qty	Variants
1	976608	Transmission housingblack	1	
2	GU19351900	Clearance washer	1	
3	GU90403549	Gasket ring 35x47x7	1	
4	GU19351100	Clearance washer	1	
5	GU92252235	Roller bearing 35x50x17	1	
6	GU12022600	Oil plug	1	
7	GU90706203	O-ring 20,24X2,62	1	
8	GU31003766	Oil unload plug M10x1	1	
9	GU01528930	Gasket 10x18x1,5	2	
10	GU19206501	Breather plug	1	
11	GU32633560	Spacer	1	
12	GU96508055	Stud bolt	4	
13	GU32350410	Cover	1	
14	GU92201070	Ball bearing 70x110x13	1	
15	GU90407591	Gasket ring 75x95x10	1	
16	GU32351410	Pin	1	
17	GU90353030	Stop ring	1	
18	GU32354610	Bevel gear 8/33	1	
19	GU03067730	screw M8x25	6	
20	GU92249227	Tap.roller bearing 25x5	1	
21	GU19355400	Spacer 0,8 mm	1	
21	GU19355402	Spacer 0,9 mm	1	
21	GU19355404	Spacer 1 mm	1	
21	GU19355406	Spacer 1,1 mm	1	
21	GU19355408	Spacer 1,2 mm	1	
21	GU19355410	Spacer 1,3 mm	1	
21	GU19355411	Spacer 1,4 mm	1	
21	GU19355412	Spacer 1,5 mm	1	

Group	ENGINE
Code	34.10
Description	Transmission complete II
Service	1

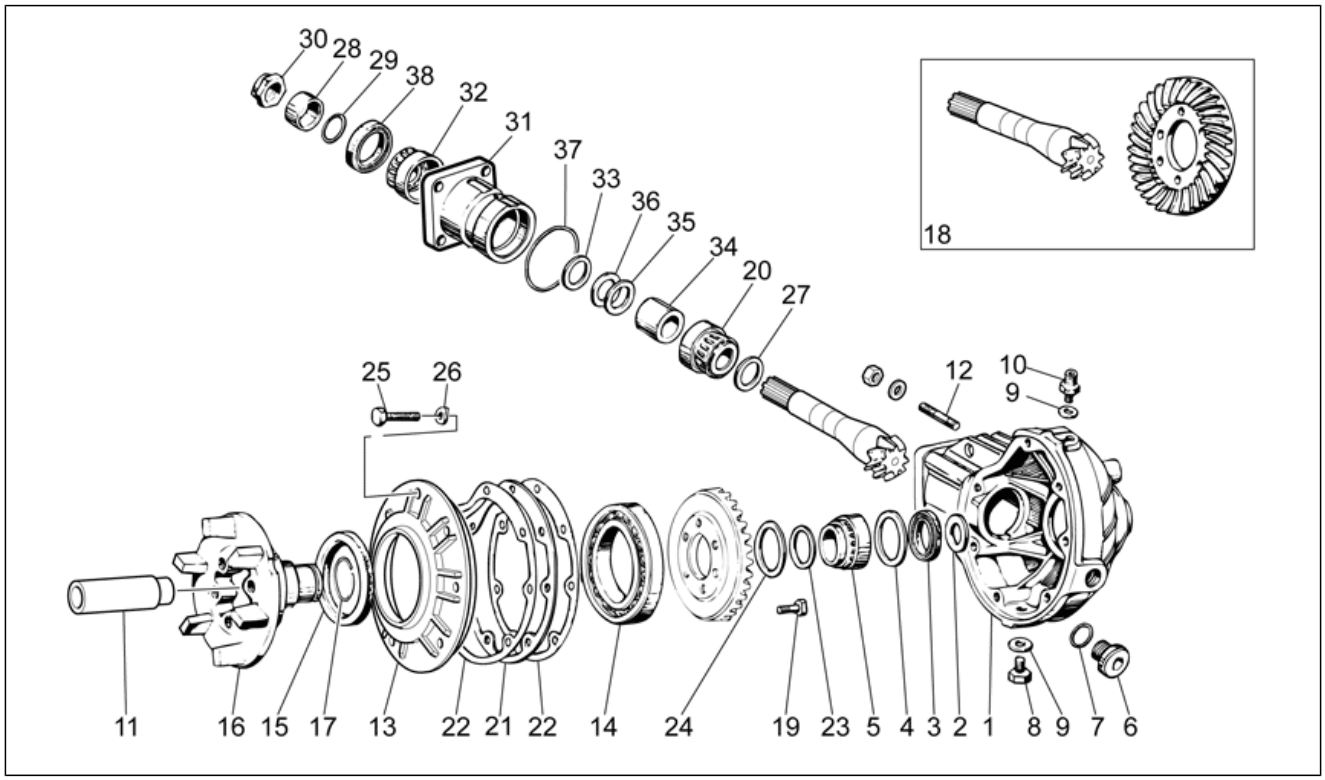

Pos.	Code	Description	Qty	Variants
21	GU19355413	Spacer 1,6 mm	1	
22	GU19350700	Gasket	2	
23	GU19352300	Thrust washer	1	
24	GU19353500	Thrust washer	1	
25	GU19357660	screw	7	
26	GU61270300	Spring washer 8x15x0,3	7	
27	GU19355320	Spacer 1 mm	1	
27	GU19355321	Spacer 1,1 mm	1	
27	GU19355322	Spacer 1,2 mm	1	
27	GU19355323	Spacer 1,3 mm	1	
27	GU19355324	Spacer 1,4 mm	1	
27	GU19355325	Spacer 1,5 mm	1	
27	GU19355326	Spacer 1,6 mm	1	
27	GU19355327	Spacer 1,7 mm	1	
27	GU19355328	Spacer 1,8 mm	1	
27	GU19355329	Spacer 1,9 mm	1	
28	GU19356801	Spacer	1	
29	GU90706188	Gasket ring 18,77X1,78	1	
30	GU19356700	Nut	1	
31	GU20352421	Flange	1	
32	GU92249220	Roller bearing 20x47x14	1	
33	GU19355300	Spacer 1 mm	1	
33	GU19355301	Spacer 1,1 mm	1	
33	GU19355302	Spacer 1,2 mm	1	
33	GU19355303	Spacer 1,3 mm	1	
33	GU19355304	Spacer 1,4 mm	1	
33	GU19355305	Spacer 1,5 mm	1	
33	GU19355306	Spacer 1,6 mm	1	

Group	ENGINE
Code	34.10
Description	Transmission complete II
Service	1

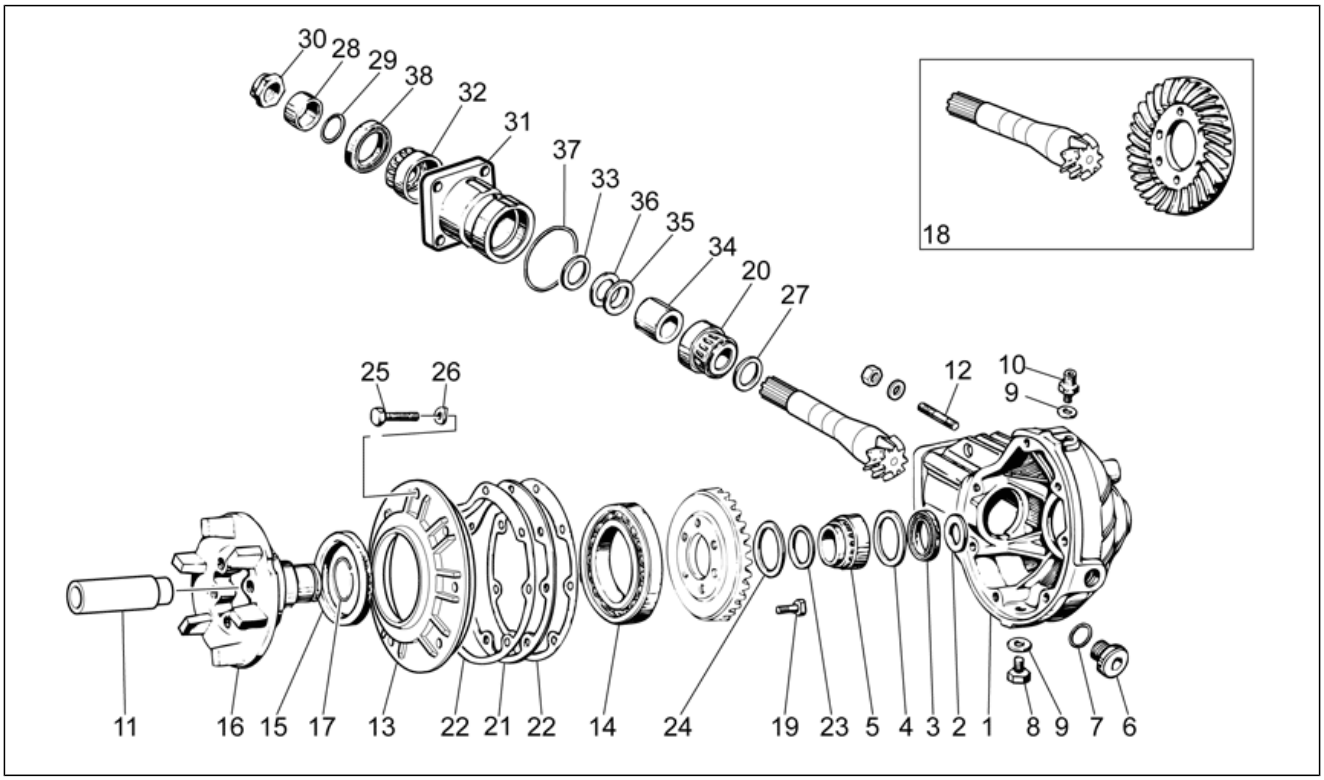

Pos.	Code	Description	Qty	Variants
33	GU19355307	Spacer 1,7 mm	1	
33	GU19355308	Spacer 1,8 mm	1	
33	GU19355309	Spacer 1,9 mm	1	
34	GU20355121	Spacer	1	
35	GU19355200	Shim 0,1 mm	1	
36	GU19355202	Shim 0,15 mm	1	
37	GU90706584	Gasket 58,42x2,62	1	
38	GU90403251	Gasket ring 32x47x10	1	

Group	ENGINE
Code	34.34
Description	Crank-case
Service	1

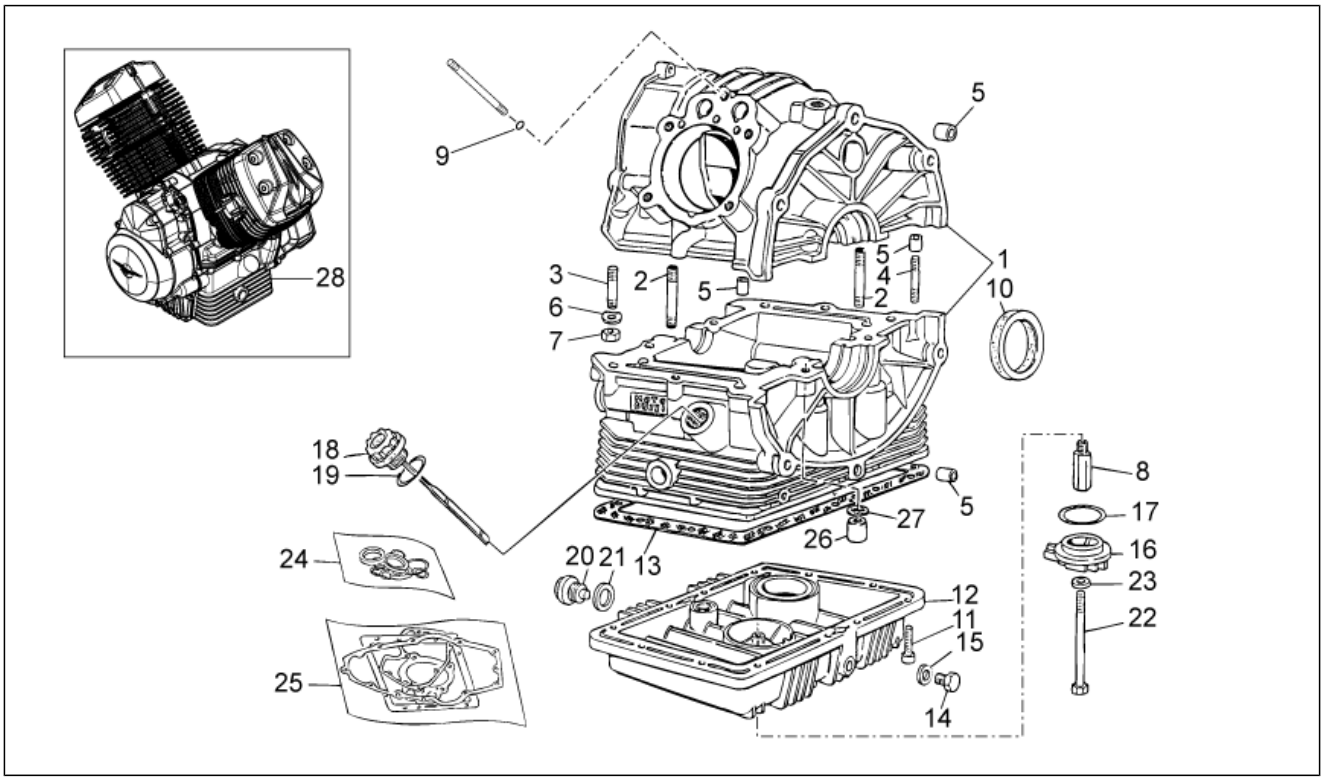

Pos.	Code	Description	Qty	Variants
1	2A0002355	Cranckcase assy	1	
2	GU96451560	Stud bolt	4	
3	GU96451430	Stud bolt	4	
4	GU96508055	Stud bolt	2	
5	GU19015020	Bushing	4	
6	GU61270300	Spring washer 8x15x0,3	6	
7	GU92606208	Nut M8x1,25	6	
8	GU19003800	Joint	1	
9	GU90706076	O-ring	2	
10	886365	Gasket ring	1	
11	GU98682325	Hex socket screw M6x25	12	
12	976604	Oil sump black	1	
13	887004	Sump gasket	1	
14	GU31003766	Oil unload plug M10x1	1	
15	GU10528900	Gasket	1	
16	976685	Plug	1	
17	GU90706444	O-ring	1	
18	883826	Oil load plug	1	
19	GU90706281	O-ring 28,24x2,62	1	
20	GU12003702	Oil unload plug	1	
21	GU95100709	Gasket 20,1x28x2	1	
22	GU27152885	Bolt	1	
23	GU12154200	Gasket 8,25x15x1	1	
24	GU32999510	Oil seals - set	1	
25	GU32999010	Gasket set	1	
26	GU13021900	Column nut	4	
27	GU95129180	Washer 10,5X18X0,8	4	
28	2L0001895	Engine assy w/hout transm.	1	

Group	ENGINE
Code	34.35
Description	Timing system cover
Service	1

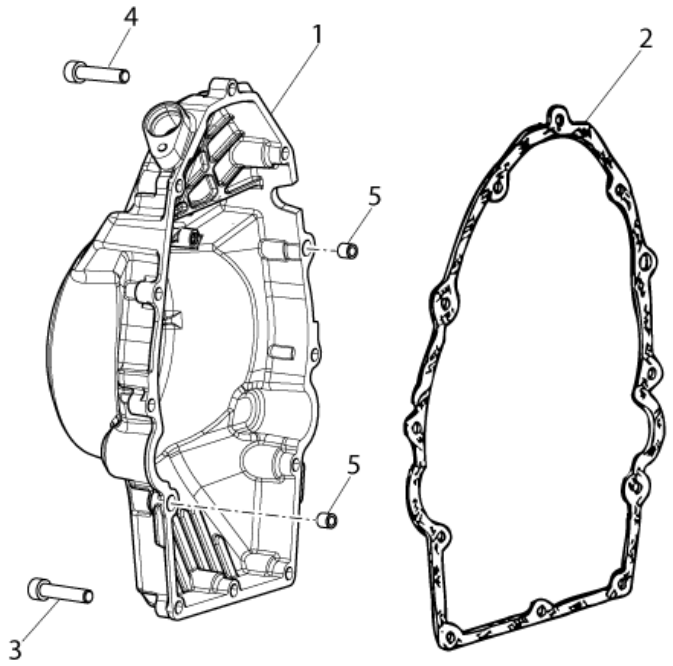

Pos.	Code	Description	Qty	Variants
1	2A000085	Cover	1	
2	887003	Cover gasket	1	
3	GU98682325	Hex socket screw M6x25	10	
4	GU98682330	Hex socket screw M6x20	2	
5	GU19002020	Bushing 6,6x9x13	2	

Group	ENGINE
Code	34.36
Description	Cylinder head
Service	1

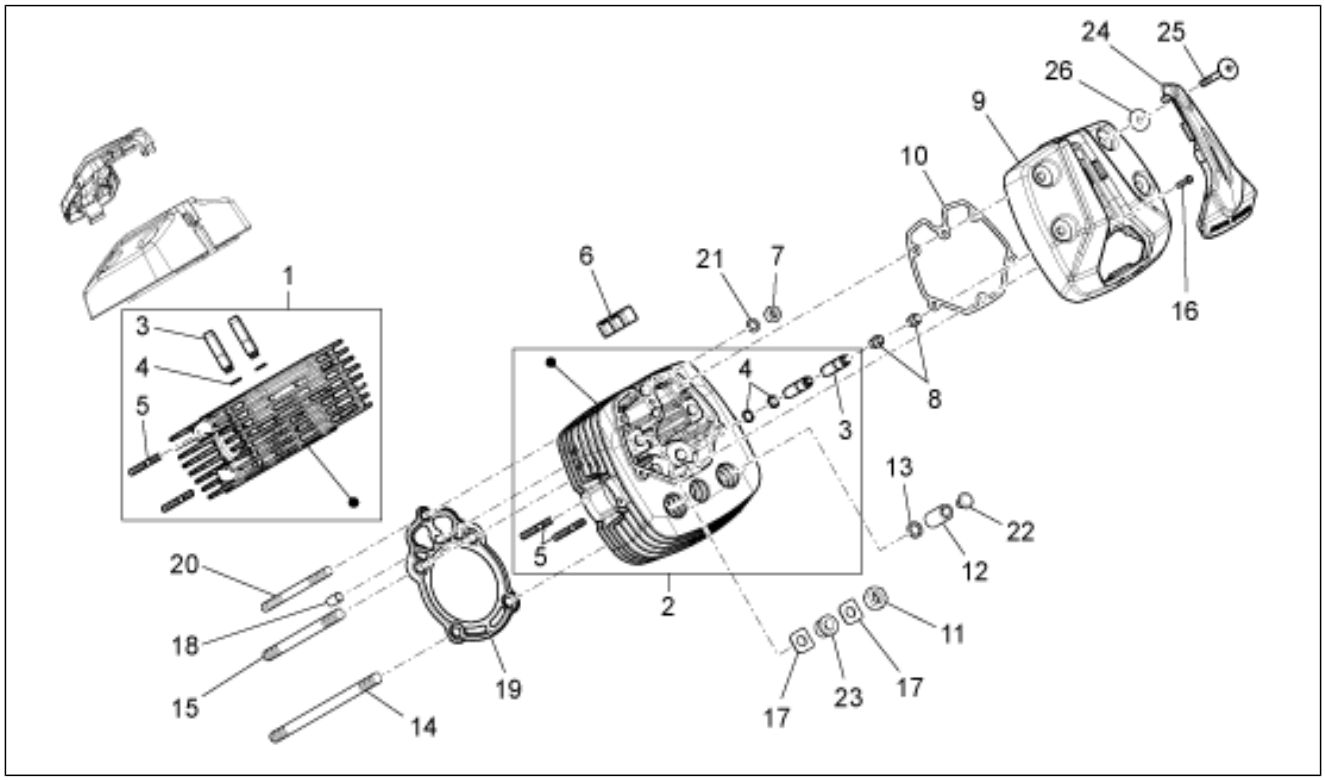

Pos.	Code	Description	Qty	Variants
1	8872724	RH head	1	
2	8872754	LH head	1	
3	GU61036801	Valve guide	4	
4	GU90353009	Snap ring	4	
5	GU96506042	Stud bolt	4	
6	B063111	Damping plug	4	
7	GU19021920	Nut	2	
8	GU19037820	Oil seal	4	
9	887523	Head cover	2	
10	887002	Head cover gasket	2	
11	GU92603010	Nut M10X1,5	4	
12	GU13021900	Column nut	4	
13	GU95129180	Washer 10,5X18X0,8	4	
14	GU96510214	Stud bolt M10x214	4	
15	GU96510181	Stud bolt M10x182	4	
16	GU98692325	Hex socket screw M6x25	4	
17	GU19032980	Spacer	8	
18	GU19021360	Bushing	2	
19	B063099	Cylinder head gasket	2	
20	976898	Stud bolt M8x140	2	
21	GU61270300	Spring washer 8x15x0,3	2	
22	GU93180245	Cover	4	
23	AP8144071	Rubber exhaust	1	
24	887279	Spark plug cover	2	
25	887483	Head cover screw M6x52.5	8	
26	969973	Washer	8	

Group	ENGINE
Code	34.37
Description	Crankshaft cpl.
Service	1

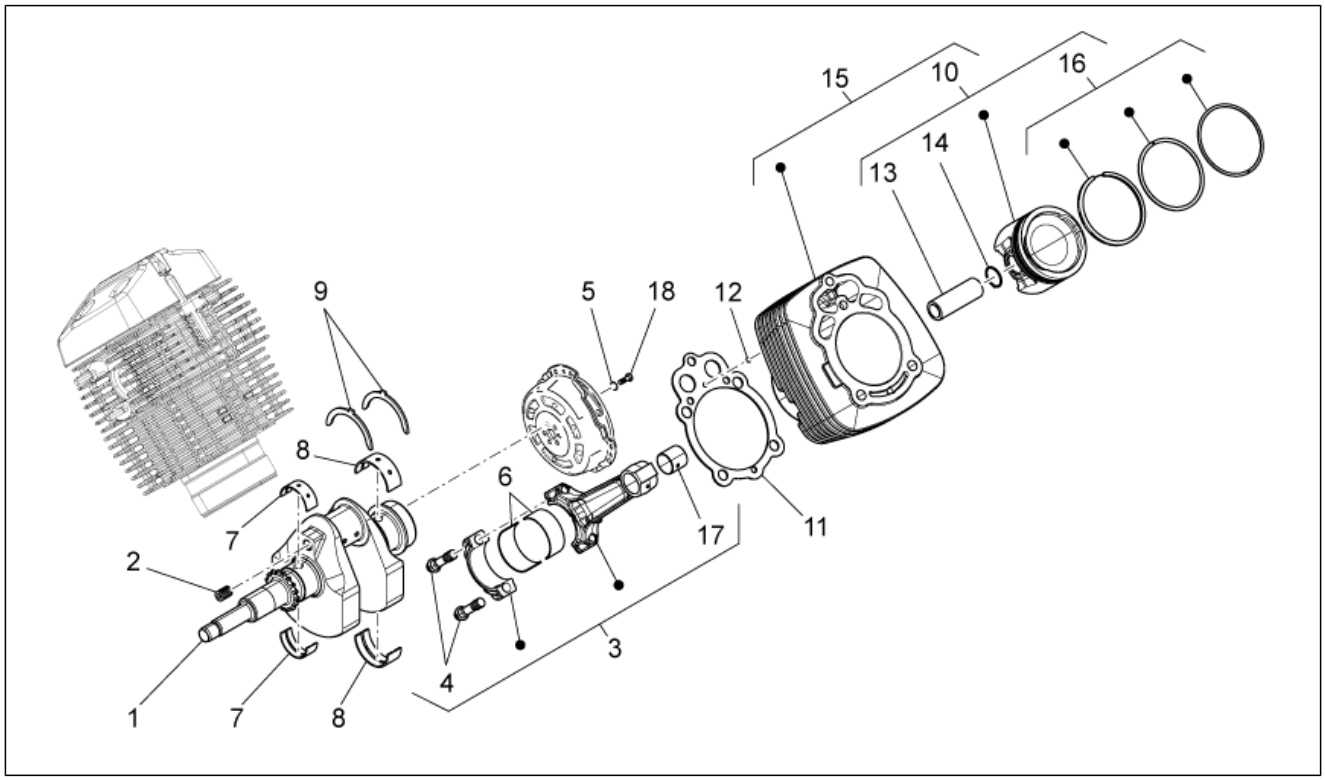

Pos.	Code	Description	Qty	Variants
1	2A0000995	Drive shaft	1	
2	GU19065400	Cover	1	
3	GU27061585	Connecting rod cpl.	2	
4	GU19062261	screw	4	
5	GU14615901	Washer 8,4X13X0,8	6	
6	GU27062060	Bearing half-shell	4	
7	GU27065660	Front main half-bearing	2	
8	GU27066560	Rear main half-bearing	2	
9	GU27066460	Half-clamp	2	
10	8872690001	Piston complete with 80 Cat. D	1	
10	8872690002	Piston complete with 80 Cat. E	1	
10	8872690003	Piston complete with 80 Cat. F	1	
11	886670	Cylinder gasket	2	
12	GU61027200	O-ring	2	
13	B063016	Piston pin	2	
14	874567	Stop ring	4	
15	B063465	Cylinder with piston	2	
16	B063466	Pistonring set	2	
17	GU27061885	Bushing	2	
18	GU19067700	screw	6	

Group	ENGINE
Code	34.38
Description	Timing system
Service	1

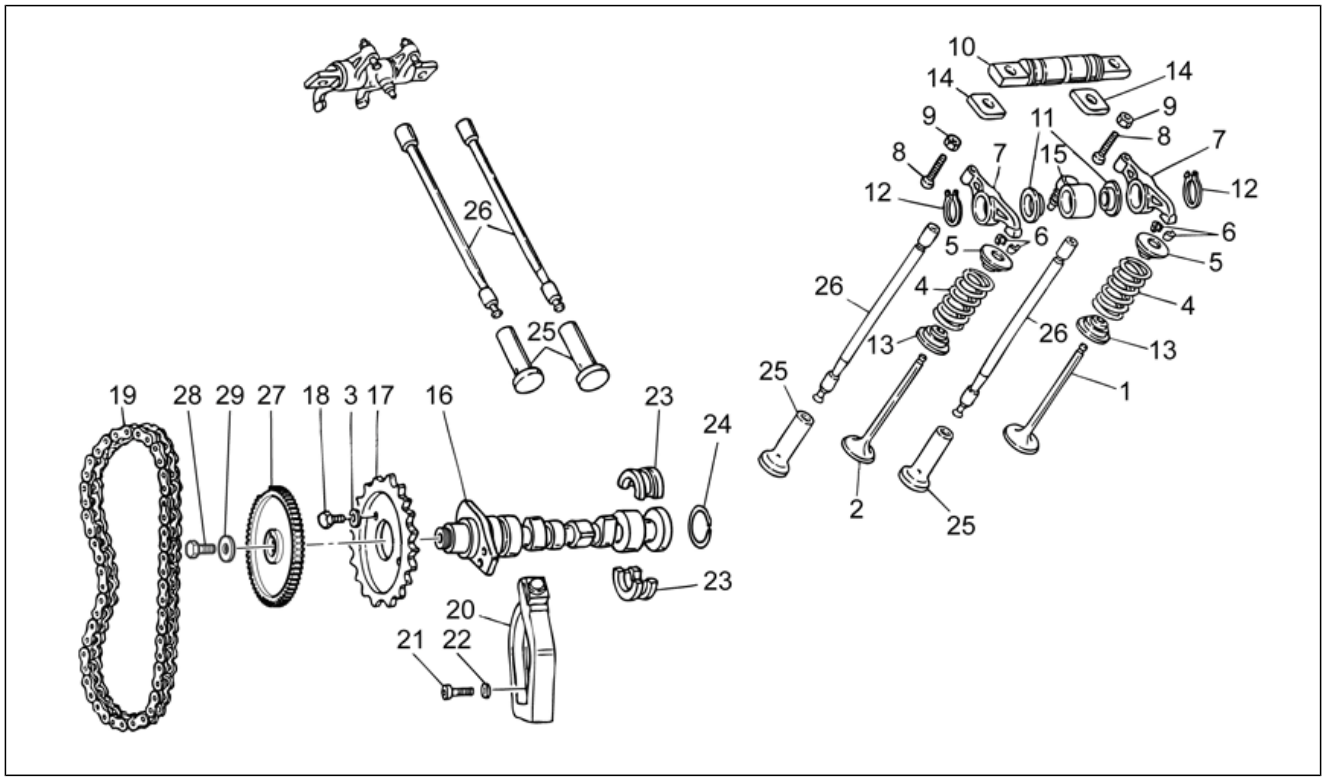

Pos.	Code	Description	Qty	Variants
1	2A000146	Valve, in	2	
2	2A000147	Exaust valve	2	
3	GU23217800	Safety washer	2	
4	GU27037521	Spring	4	
5	GU31038015	Upper cup	4	
6	GU61038100	Half-cone	8	
7	GU19030500	Rocker arm assy.	4	
8	GU19034000	screw	4	
9	GU92602406	Nut M6x1	4	
10	GU19032080	Rocker shaft	2	
11	GU32032310	Thrust washer	4	
12	GU90271018	Circlip	4	
13	GU31037015	Lower cup	4	
14	GU19032980	Spacer	4	
15	GU19027500	Hose	2	
16	GU32053410	Camshaft	1	
17	GU32054510	Timing system gear	1	
18	GU61054900	Bolt	2	
19	GU19058021	Camshaft chain	1	
20	GU19058220	Chain stretching drive	1	
21	GU98882316	screw	1	
22	GU95129115	Washer	1	
23	GU19055700	Sector	2	
24	GU90353029	Snap ring	1	
25	GU19045861	Tappet	4	
26	GU31045015	Rocker arm rod	4	
27	887528	Wheel speed sensor, left front	1	
28	GU98054422	screw M8x22	1	

Group	ENGINE
Code	34.38
Description	Timing system
Service	1

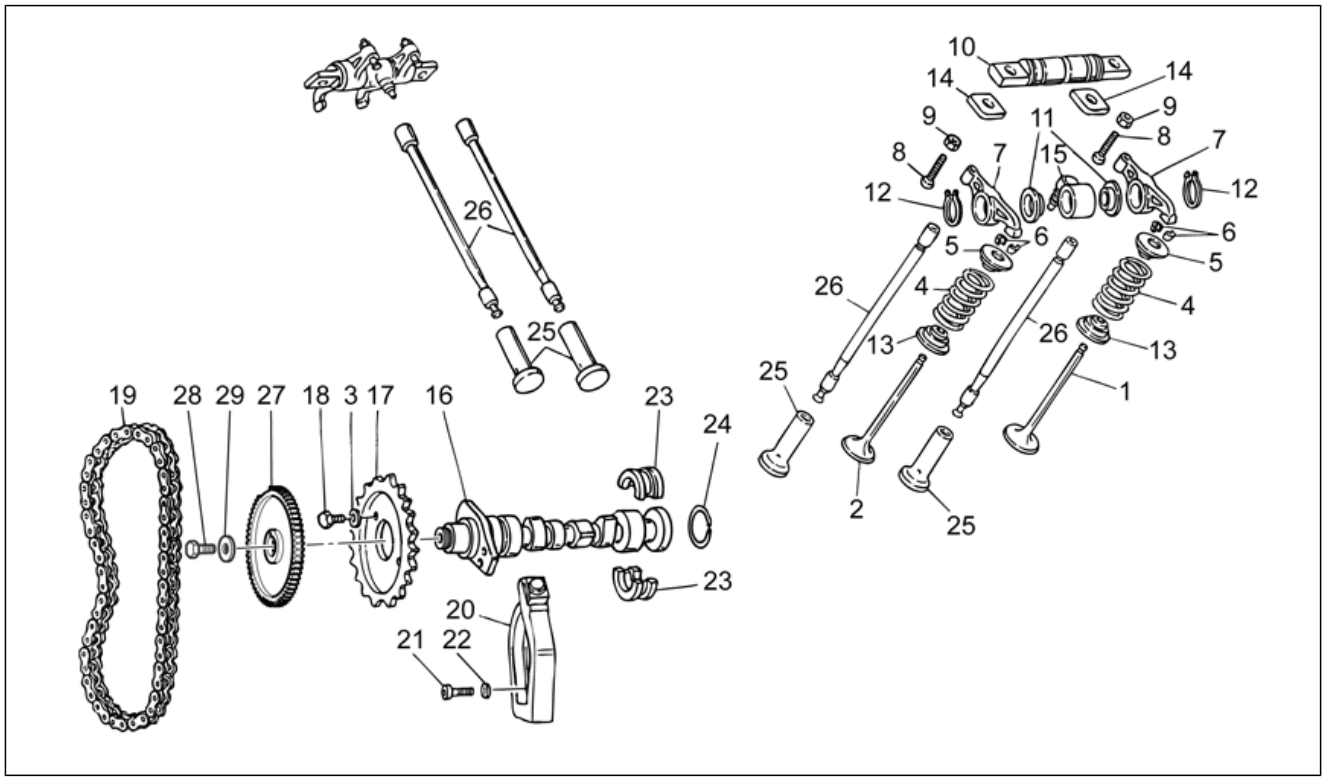

Pos.	Code	Description	Qty	Variants
29	GU95100244	Washer	1	

Group	ENGINE
Code	34.39
Description	Oil pump
Service	1

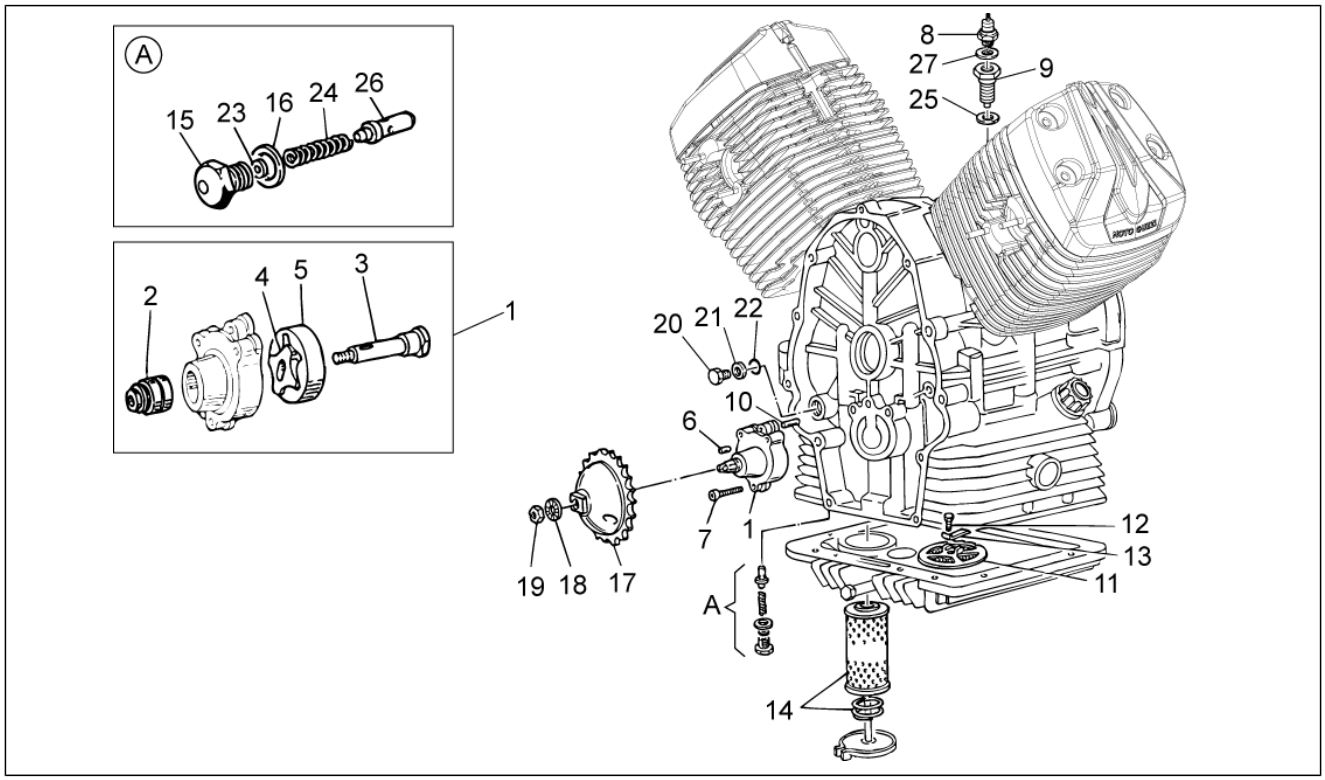

Pos.	Code	Description	Qty	Variants
1	GU19146422	Oil pump	1	
2	GU92252210	Roller bearing 10x22x20	1	
3	GU20147810	Oil pump shaft assy.	1	
4	GU20148410	Inner rotor	1	
5	GU20148610	Outer rotor	1	
6	GU92296723	Roller	1	
7	884039	Hex socket screw M6x35	3	
8	641541	Oil pressure sensor	1	
9	887093	Union	1	
10	GU19018920	Pin	2	
11	GU19152200	Oil filter	1	
12	GU98084314	Hex screw M6x14	1	
13	GU95187006	Plate	1	
14	GU27153085	Oil filter	1	
15	GU31159050	Cover	1	
16	GU18144350	Washer 18,25x24x1	3	
17	GU20147710	Pump gear	1	
18	AP8152220	Washer	1	
19	GU92602510	Nut M10x1,25	1	
20	GU31016050	Cover	1	
21	GU18161150	Gasket 14,25	1	
22	GU90706111	O-ring	1	
23	GU95008206	Washer 6,15x11x0,8	3	
24	GU94321079	Spring	1	
25	GU95100602	Gasket	1	
26	GU31150950	Piston	1	
27	GU95100309	Washer	1	

Group	ENGINE
Code	34.40
Description	Clutch I
Service	1

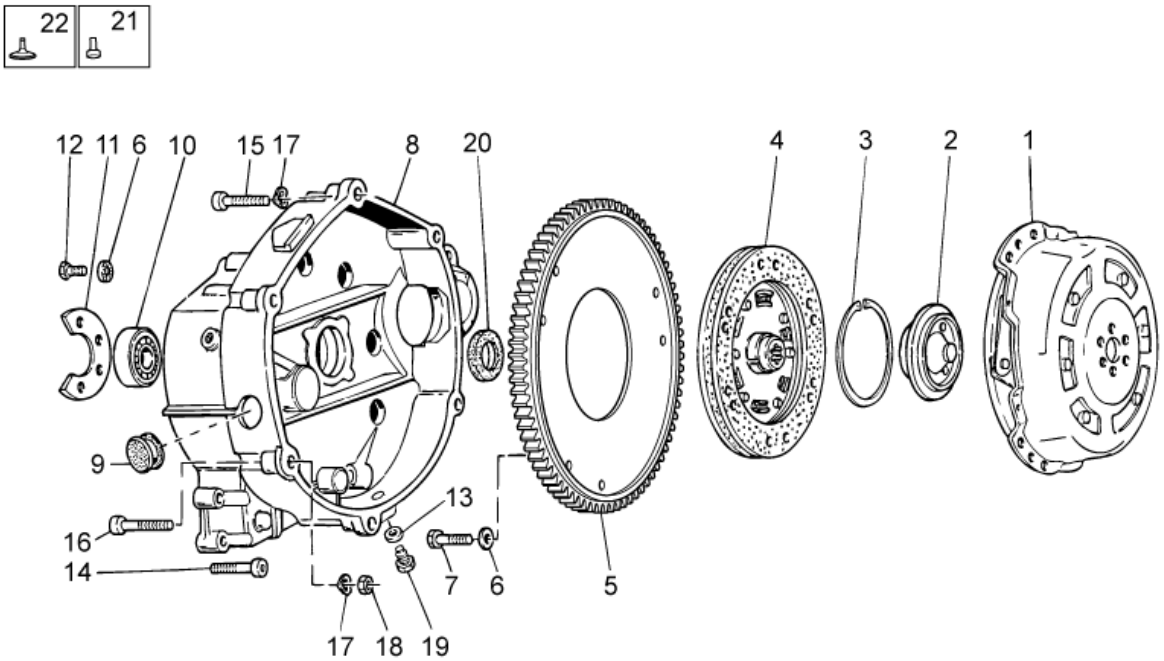

Pos.	Code	Description	Qty	Variants
1	GU32080310	Clutch	1	
2	GU19083462	New cup type	1	
3	GU90272075	Snap ring	1	
4	GU32084410	Driven clutch disc	1	
5	GU32067910	Chain ring	1	
6	GU14217901	Washer 6,4x10x0,7	9	
7	884038	Hex screw M6x16	6	
8	2A000106	Clutch drum	1	
9	GU93180220	Cover	1	
10	GU92201225	Bearing 25x52x15	1	
11	GU19203460	Bearing fixing plate	1	
12	GU98084314	Hex screw M6x14	3	
13	GU10528900	Gasket	1	
14	884032	Hex socket screw M6x30	11	
15	GU98680435	Hex socket screw M8x35	5	
16	GU98680450	Hex socket screw M8x50	1	
17	GU61270300	Spring washer 8x15x0,3	6	
18	GU92606208	Nut M8x1,25	1	
19	GU31003766	Oil unload plug M10x1	1	
20	886629	Gasket ring	1	
21	GU23204471	Jet	1	
22	GU23204571	Jet	1	

Group	ENGINE
Code	34.41
Description	Clutch II
Service	1

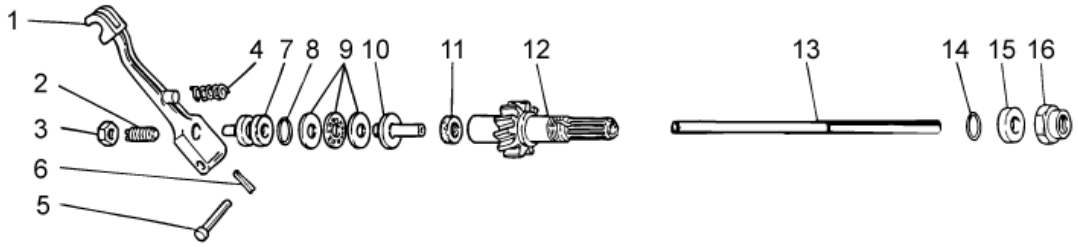

Pos.	Code	Description	Qty	Variants
1	GU14090201	Clutch relese shaft	1	
2	GU14090400	Adjuster screw	1	
3	GU92606508	Nut	1	
4	GU94321105	Lever return spring	1	
5	GU95780271	Pin 7x39	1	
6	GU95500222	Split pin	1	
7	GU14086100	Outer body	1	
8	GU90706170	O-ring 17,13x2,62	1	
9	GU12087001	Thrust bearing	1	
10	GU14086000	Inner body	1	
11	GU90400616	Gasket ring 6x16x7	1	
12	GU27210760	Transmission shaft Z=16	1	
13	GU20085720	Rod	1	
14	GU90706235	O-ring 23,52x1,78	1	
15	GU19213760	Spacer	1	
16	GU19356760	Nut	1	

Group	ENGINE
Code	34.42
Description	Transmission cage
Service	1

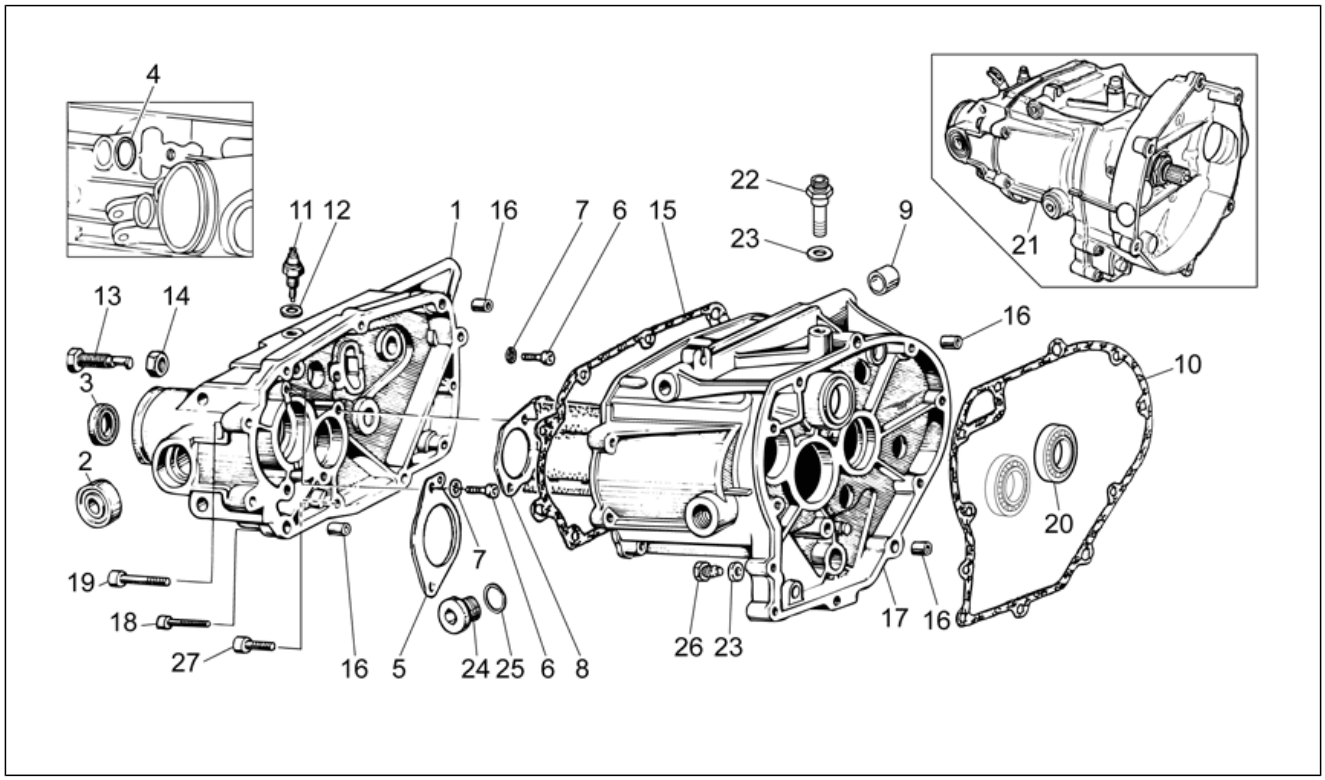

Pos.	Code	Description	Qty	Variants
1	2A000098	Gearbox cover	1	
2	2A000097	Ball bearing 6202-2RSH/C3 LHT23	2	
3	886364	Gasket ring 28x40x7	1	
4	GU90706140	O-ring 13,95x2,92	1	
5	GU32213810	Plate	1	
6	884031	Hex socket screw M6x14	4	
7	GU14217901	Washer 6,4x10x0,7	4	
8	GU32208210	Oil bulhead	1	
9	GU19202320	Bushing 10,25x15,7x8	2	
10	887005	Gasket	1	
11	B063269	Sensor	1	
12	GU12154200	Gasket 8,25x15x1	1	
13	GU19237800	Screw M12x1,25	1	
14	GU92606512	Low nut M12x1,25	1	
15	887006	Gasket	1	
16	GU19002020	Bushing 6,6x9x13	4	
17	887235	Transmission cage	1	
18	GU98682330	Hex socket screw M6x20	5	
19	GU98680435	Hex socket screw M8x35	4	
20	B063342	Ball bearing 6004/C3	1	
21	976992	Gear box assy	1	
22	GU32206510	Breather plug	1	
23	GU10528900	Gasket	2	
24	GU12022600	Oil plug	1	
25	GU90706203	O-ring 20,24X2,62	1	
26	GU31003766	Oil unload plug M10x1	1	
27	AP8150285	Hex socket screw M6x35	2	

Group	ENGINE
Code	34.43
Description	Gear box
Service	1

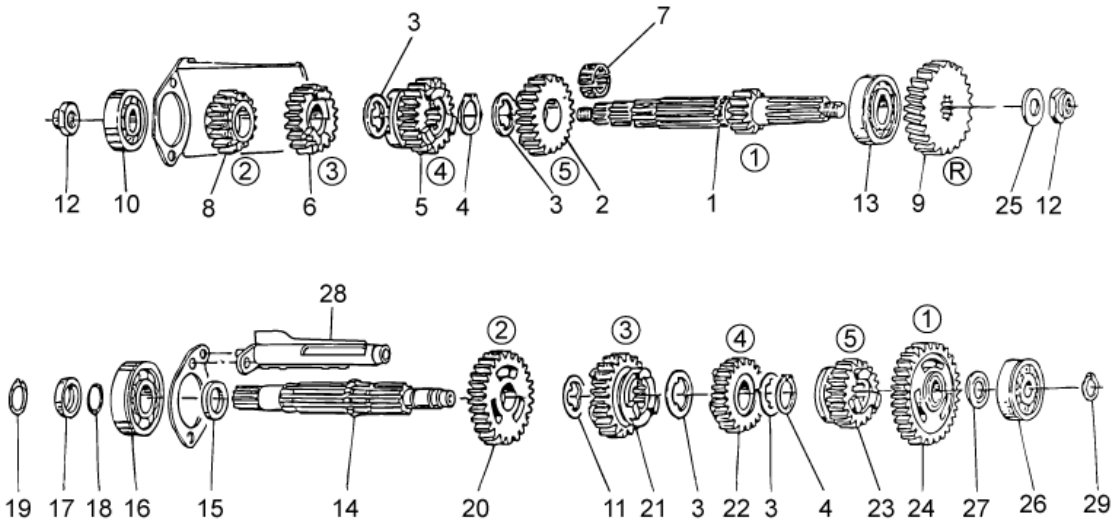

Pos.	Code	Description	Qty	Variants
1	GU32210510	Primary gear shaft Z=11	1	
2	GU32212011	Gear 5a AP Z=25	1	
3	GU19215460	Thrust washer	3	
4	GU90271124	Circlip	2	
5	GU32211810	Gear 4a AP Z=18	1	
6	GU32211410	Gear 3a AP Z=18	1	
7	GU92251028	Roller cage	1	
8	GU23211372	Gear 2a AP Z=14	1	
9	GU32211110	Idle gear AP Z=21	1	
10	GU92218417	Bearing AP 17x40x17,5	1	
11	GU19214660	Clearance washer	2	
12	GU10054100	Nut	2	
13	GU92230320	Bearing AP 20x37x17	1	
14	GU32213610	Driven shaft	1	
15	GU19212900	Spacer	1	
16	GU92201220	Bearing 20X47X14	1	
17	GU19213720	Spacer	1	
18	GU90706188	Gasket ring 18,77X1,78	1	
19	GU90271121	Circlip	1	
20	GU32214510	Gear 2a AS Z=23	1	
21	GU32214810	Gear 3a AS Z=23	1	
22	GU32215010	Gear 4a AS Z=19	1	
23	GU32215210	Gear 5a AS Z=22	1	
24	GU32214010	Gear 1a AS Z=26	1	
25	GU39238100	Clearance washer	1	
26	GU92234716	Bearing	1	
27	GU10214300	Spacer 1,5 mm	1	
27	GU10214301	Spacer 1,7 mm	1	

Group	ENGINE
Code	34.43
Description	Gear box
Service	1

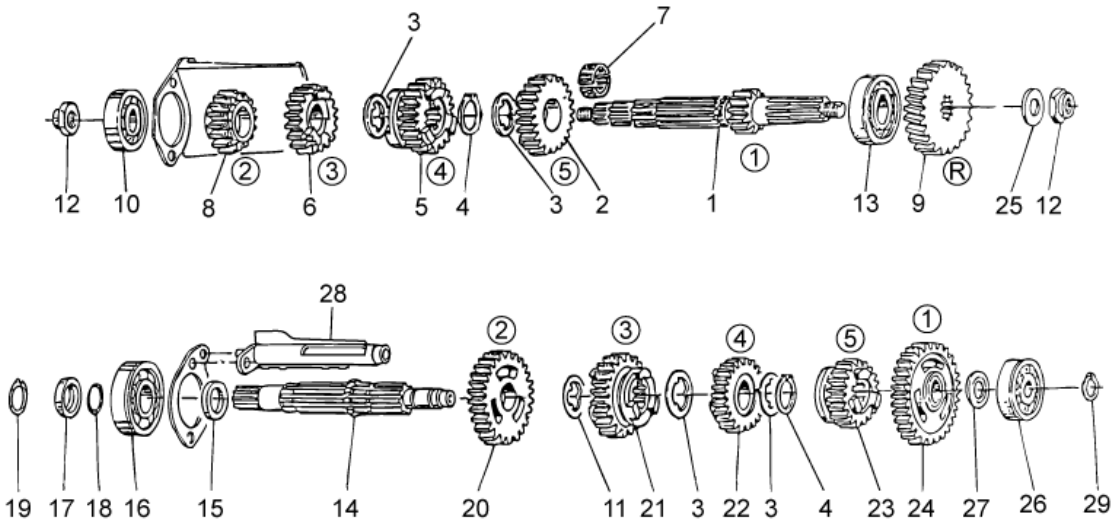

Pos.	Code	Description	Qty	Variants
27	GU10214302	Spacer 1,8 mm	1	
27	GU10214303	Spacer 1,9 mm	1	
27	GU10214304	Washer 2 mm	1	
27	GU10214305	Spacer 2,1 mm	1	
28	GU32202010	Gutter	1	
29	GU90271117	Circlip	1	

Group	ENGINE
Code	34.44
Description	Gear box selector
Service	1

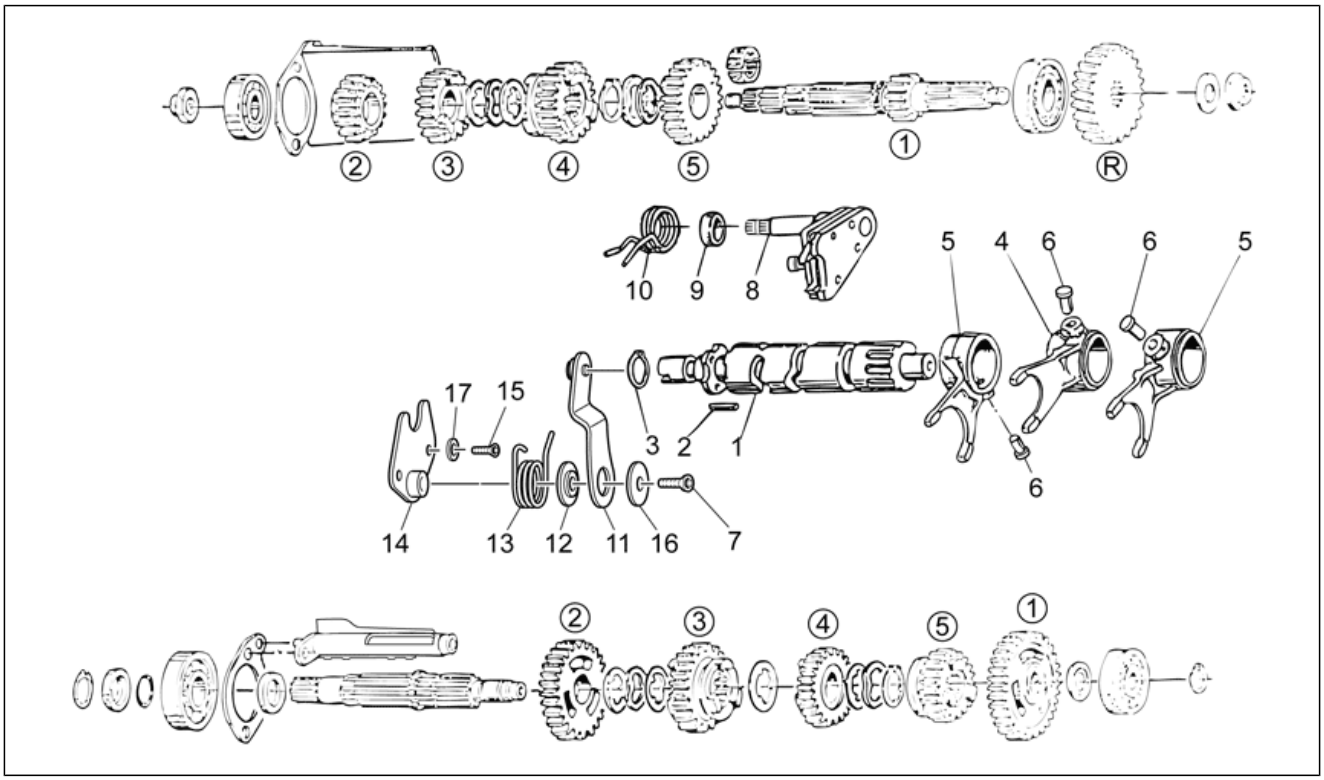

Pos.	Code	Description	Qty	Variants
1	GU32234410	Shift cam	1	
2	GU19234600	Pin	4	
3	GU90274026	Snap ring	1	
4	GU32231210	Fork AP	1	
5	GU32231010	Fork AS	2	
6	GU32233010	Roller	3	
7	GU98230612	screw	1	
8	887196	Preselection complete	1	
9	GU20208520	Spacer	1	
10	GU32238210	Spring	1	
11	GU32234710	Lever	1	
12	GU32234810	Washer	1	
13	GU32234110	Spring	1	
14	GU32235710	plate	1	
15	GU98257618	Screw M6x18	2	
16	GU32234910	Washer 6,4x20x1	1	
17	GU14217901	Washer 6,4x10x0,7	2	

Group	ENGINE
Code	34.45
Description	Generator - Regulator
Service	1

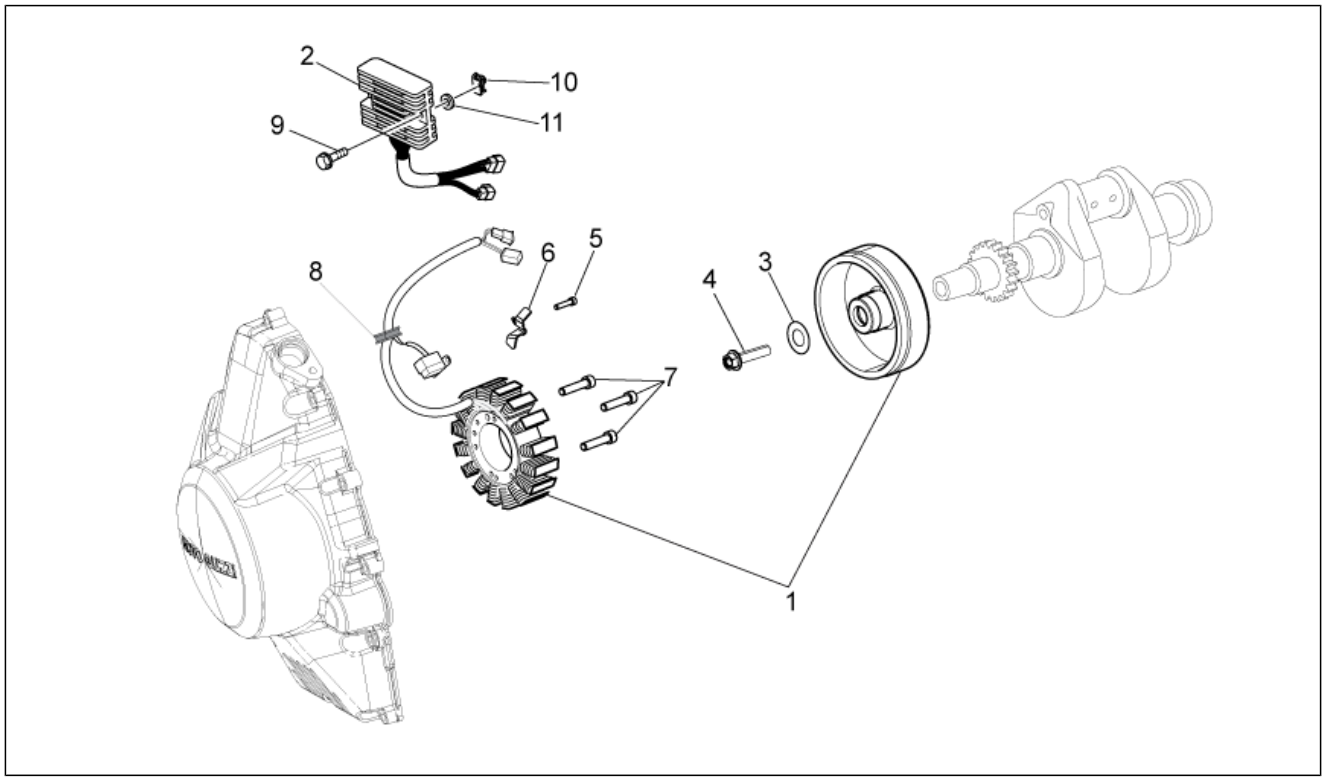

Pos.	Code	Description	Qty	Variants
1	2D000024	Cdi magneto assy	1	
2	2D000043	Voltage regulator	1	
3	897478	Washer 12x26.5x3	1	
4	857206	Screw w/ flange M12X1,25X50	1	
5	GU98682212	Hex socket screw M5x12	1	
6	2A000115	Plate	1	
7	2A000129	Low head socket screw M6x35	3	
8	GU19007700	Rubber spacer	1	
9	AP8152281	Screw w/ flange M6x30	2	
10	254485	Spring plate M6	2	
11	GU95100125	Washer	2	

Group	ENGINE
Code	34.46
Description	Starter motor
Service	1

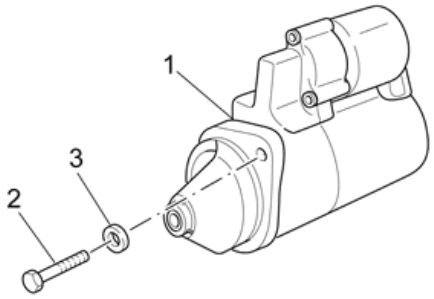

Pos.	Code	Description	Qty	Variants
1	GU05730730	Starter motor Bosch	1	
2	GU98682435	Hex socket screw	2	
3	GU95008208	Washer 8,4X15X1,5	2	

Group	ENGINE
Code	34.47
Description	Throttle body
Service	1

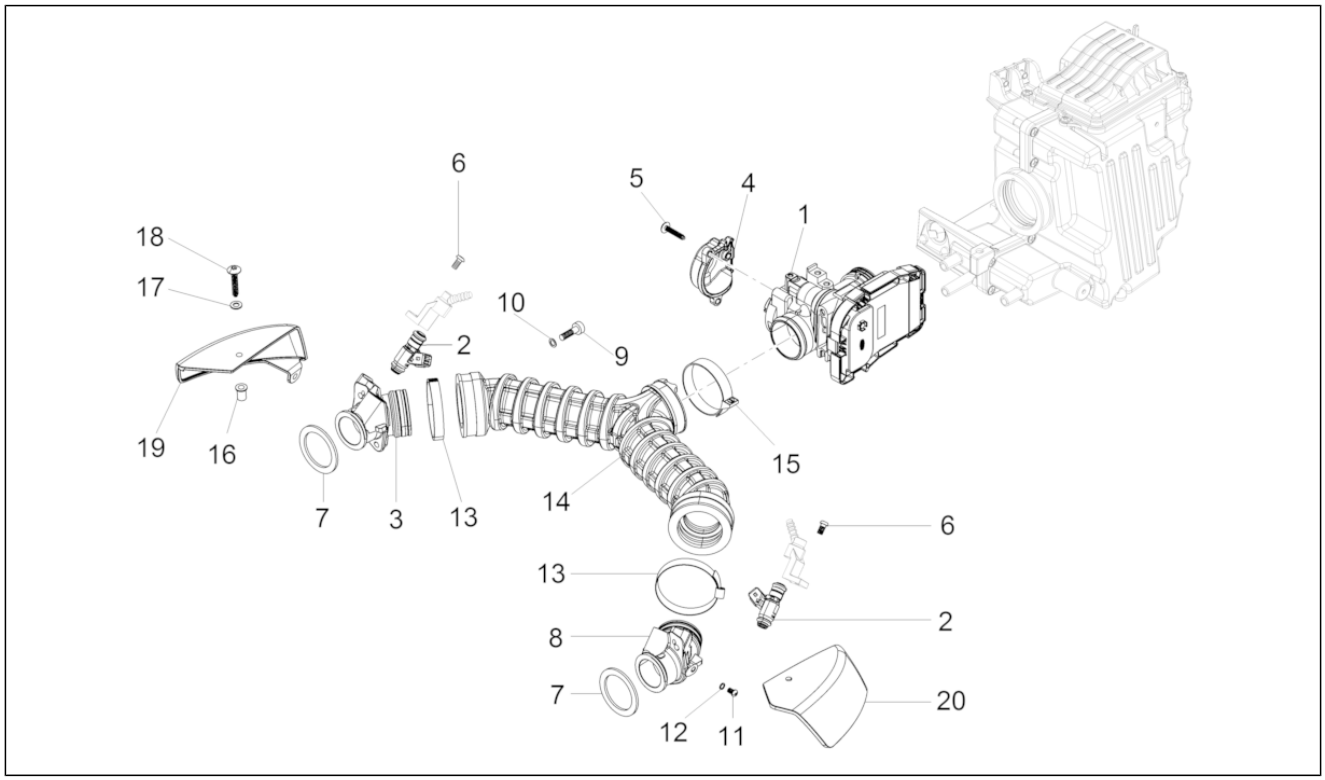

Pos.	Code	Description	Qty	Variants
1	CM228303	Electronic control unit ECU for injection	1	**Country:**Japan[J]
1	CM228304	Electronic control unit ECU for injection	1	
2	B063049	Injector	2	
3	GU32115010	RH manifold	1	
4	880260	Throttle body Protection	1	
5	B016796	Torx convex big end screw	3	
6	AP8152298	Screw w/ flange M5x16	2	
7	GU32115510	Gasket	2	
8	GU32115011	LH manifold	1	
9	GU98622322	screw	4	
10	GU03013800	Washer 6,4x12	4	
11	884029	Hex socket screw M6x10	2	
12	GU95100116	Washer 6,25x10x1,5	2	
13	884311	Hose clamp D.61	2	
14	887812	Throttle body hose	1	
15	884310	Hose clamp D.55	1	
16	GU93231605	Antivibration bush	4	
17	GU30577800	Nylon washer 5,5X12X1	4	
18	GU98370515	screw	4	
19	2B000971	RH cover	1	
20	2B000972	LH cover	1	