Carter Moteur	Crankcase	Tavola 1
Culasse - Cylindre	Head - Cylinders	Tavola 2
Équipage mobile - Ebrayage	Connecting system - Clutch	Tavola 3
Distribution	Timing system	Tavola 4
Alimentation - Échappement - Carburateur	Feeding - Exhaust - Carburetor	Tavola 5
Graissage	Lubrication	Tavola 6
Embrayage	Clutch	Tavola 7
Carter de Boite de Vitesses	Gearbox case	Tavola 8
Boite de vitesses	Gearbox	Tavola 9
Bras oscillant	Rear fork	Tavola 10
Pont	Rear transmission	Tavola 11
Cadre	Frame	Tavola 12
Carrosserie	Body	Tavola 13
Fourche Avant - Suspensions Arrière	Front fork - Rear suspension	Tavola 14
Roues	Wheels	Tavola 15
Freinage	Brake system	Tavola 16
Tableau de bord - Commandes	Instrument panel - Controls	Tavola 17
Allumage	Ignition	Tavola 18
Démarreur Bendix	Starter Bendix	Tavola 18A
Éclairage - Klaxon	Lights - Horn	Tavola 19
Variantes Allemagne	Modifications Germany	V35-D

Alimentation - Échappement - Carburateur	Tavola 5
Allumage	Tavola 18
Boite de vitesses	Tavola 9
Bras oscillant	Tavola 10
Cadre	Tavola 12
Carrosserie	Tavola 13
Carter de Boite de Vitesses	Tavola 8
Carter Moteur	Tavola 1
Culasse - Cylindre	Tavola 2
Démarreur Bendix	Tavola 18A
Distribution	Tavola 4
Éclairage - Klaxon	Tavola 19
Embrayage	Tavola 7
Équipage mobile - Ebrayage	Tavola 3
Fourche Avant - Suspensions Arrière	Tavola 14
Freinage	Tavola 16
Graissage	Tavola 6
Pont	Tavola 11
Roues	Tavola 15
Tableau de bord - Commandes	Tavola 17
Variantes Allemagne	V35-D

Body	Tavola 13
Brake system	Tavola 16
Clutch	Tavola 7
Connecting system - Clutch	Tavola 3
Crankcase	Tavola 1
Feeding - Exhaust - Carburetor	Tavola 5
Frame	Tavola 12
Front fork - Rear suspension	Tavola 14
Gearbox	Tavola 9
Gearbox case	Tavola 8
Head - Cylinders	Tavola 2
Ignition	Tavola 18
Instrument panel - Controls	Tavola 17
Lights - Horn	Tavola 19
Lubrication	Tavola 6
Modifications Germany	V35-D
Rear fork	Tavola 10
Rear transmission	Tavola 11
Starter Bendix	Tavola 18A
Timing system	Tavola 4
Wheels	Tavola 15

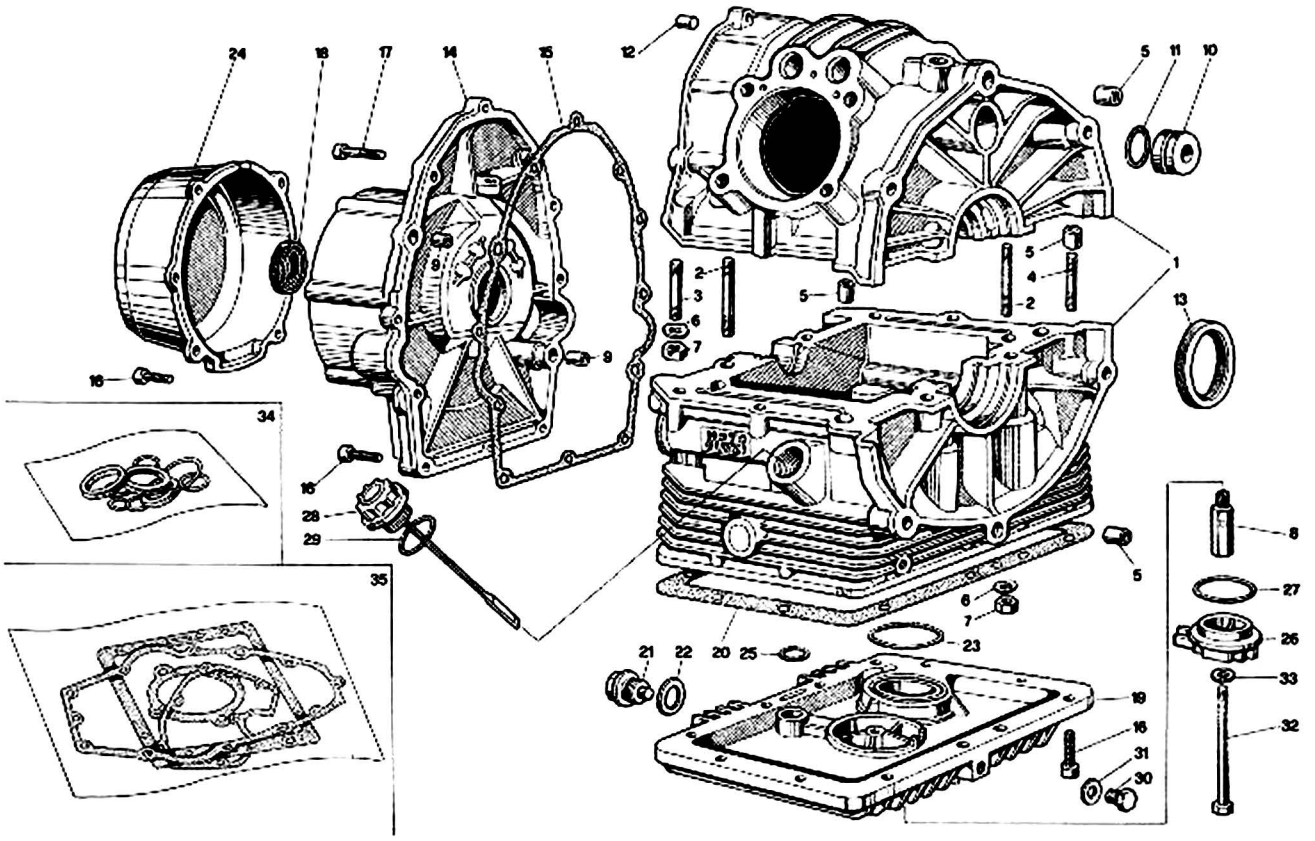

NOTE NOTES NOTES MARKE	POS. N.	N. COD. CODE No. Nr. CODE CODE Nr.	Q.tà Q.ty Q.té M.ge	DENOMINAZIONE	DESCRIPTION	DESIGNATION	BEZEICHNUNG
	1	19 00 01 00	1	Basamenti accoppiati	Coupled crankcase	Carters couplés	Gehäuse
	2	96 45 14 55	4	Prig. lungo chius. bas.	Stud bolt	Goujon	Stiftschraube
	3	96 45 14 30	4	Prigioniero corto	Short stud bolt	Goujon court	Kurzstiftschraube
	4	96 45 14 35	2	Prigioniero medio	Middle stud bolt	Goujon moyen	Mittelstiftschraube
	5	61 00 20 00	4	Boccola di riferimento	Bush	Douille	Buchse
	6	61 27 03 00	10	Rosetta elast. ondul.	Washer	Rondelle	Unterlegscheibe
	7	92 60 22 08	10	Dado per prigionieri	Nut	Ecrou	Mutter
	8	19 00 38 00	1	Raccordo sul basam.	Union	Raccord	Verbindung
	9	61 00 21 00	2	Boccola di riferimento	Bush	Douille	Buchse
	10	19 01 63 00	1	Tappo chiusura foro	Plug	Bouchon	Stopfen
	11	90 70 62 52	1	Guarnizione per tappo	Gasket	Joint	Dichtung
	12	19 01 60 00	1	Tappo su semibas. sup.	Plug	Bouchon	Stopfen
	13	90 40 53 67	1	Anello di tenuta	Seal ring	Bague d'étanchéité	Dichtring
	14	19 00 14 00	1	Coperchio distribuz.	Cover	Couvercle	Deckel
	15	19 00 12 00	1	Guarnizione per cop.	Gasket	Joint	Dichtung
	16	98 62 03 25	26	Vite per cop. e coppa	Screw	Vis	Schraube
	17	98 62 03 30	2	Vite lunga fiss. coper.	Screw	Vis	Schraube
	18	90 40 28 39	1	Anello di tenuta	Seal ring	Bague d'étanchéité	Dichtring
	19	19 00 35 00	1	Coppa olio	Oil sump	Carter inférieur	Ölwanne
	20	19 00 36 00	1	Guarnizione	Gasket	Joint	Dichtung
	21	95 98 02 12	1	Tappo scarico olio	Oil drain plug	Bouchon d'éch. huile	Auslassölstopfen
	22	10 52 89 00	1	Guarnizione alluminio	Gasket	Joint	Dichtung
	23	90 70 65 23	1	Anello di tenuta	Seal ring	Bague d'étanchéité	Dichtring
	24	14 00 16 00	1	Coperchio generatore	Cover	Couvercle	Deckel
	25	90 70 61 70	1	Anello di tenuta	Seal ring	Bague d'étanchéité	Dichtring
	26	19 00 34 00	1	Coperchietto	Cover	Couvercle	Deckel
	27	90 70 64 60	1	Anello di tenuta	Seal ring	Bague d'étanchéité	Dichtring
	28	19 00 49 00	1	Tappo carico olio	Oil filling plug	Bouchon de rempl. h.	Öleinfüllstutzen
	29	90 70 62 82	1	Anello di tenuta	Seal ring	Bague d'étanchéité	Dichtring
	30	12 00 37 02	1	Tappo scarico olio	Oil drain plug	Bouchon d'éch. huile	Auslassölstopfen
	31	95 10 07 09	1	Guarnizione	Gasket	Joint	Dichtung
	32	98 05 24 90	1	Bullone fiss. filtro	Bolt	Boulon	Bolzen
	33	12 15 42 00	1	Ranella	Washer	Rondelle	Unterlegscheibe
	34	19 99 95 00	1	Serie paraolio	Oil seal set	Jeu retour d'huile	Ölspritzringsatz
●	35	19 99 90 00	1	Serie guarnizioni	Gasket set	Jeu de joints	Dichtung Satz
●	–	19 99 10 01	1	Motore com. di carb.	Engine with carbur.	Moteur avec carburat.	Motor mit Vergaser

Seimm Moto Guzzi · 22054 Mandello del Lario (Co) · Tel. 731112 - 732512 - Tx: 38095 · 6/77 2500 K · Printed in Italy

Dati indicativi soggetti a modifiche senza impegno di preavviso · All data are subject to modification without notice · Scanzorosciate (Bg)

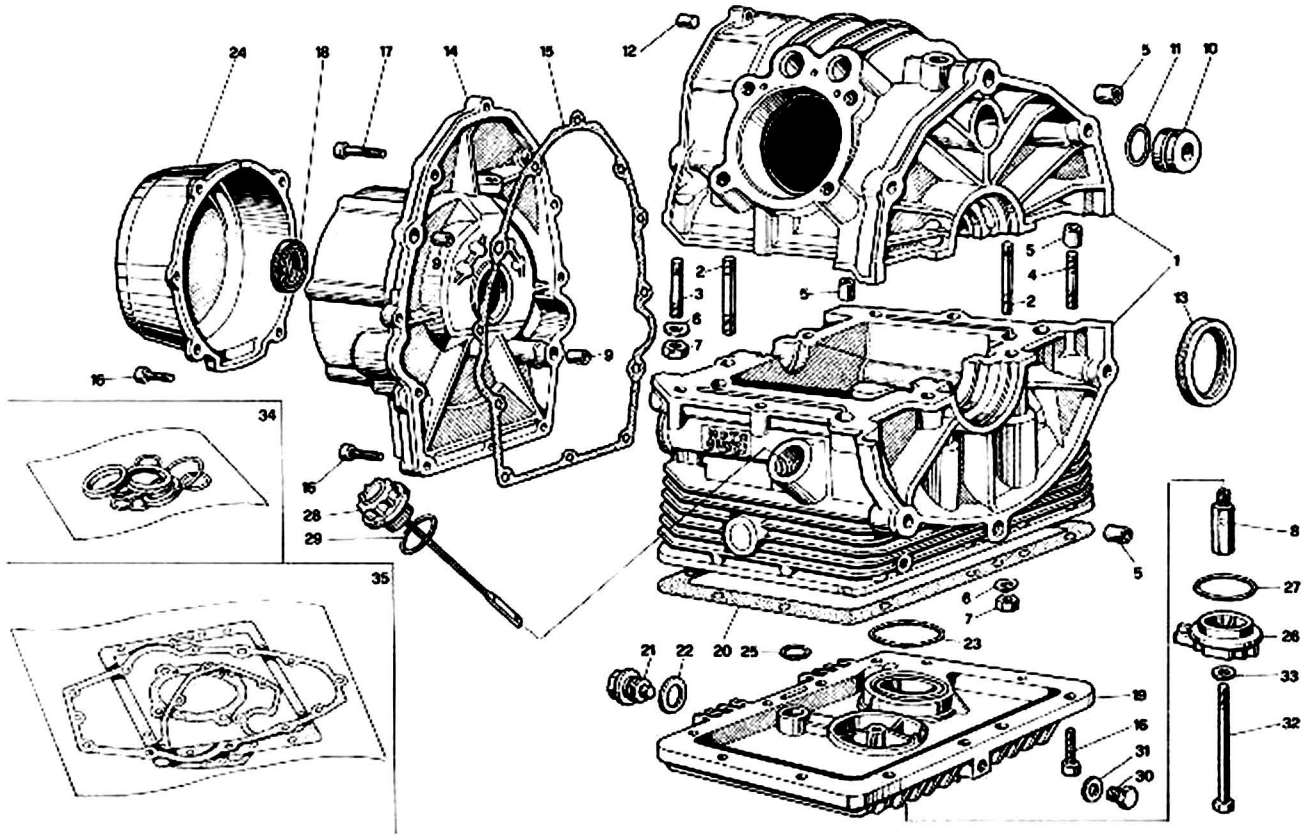

NOTE NOTES NOTES MARKE	POS. N.	N. COD. CODE No. Nr. CODE CODE Nr.	Q.tà Q.ty Q.té M.ge	DENOMINAZIONE	DESCRIPTION	DESIGNATION	BEZEICHNUNG
●	–	19 99 14 01	1	Motore e cambio com.	Engine & transm. com.	Moteur et boite à vit.	Motor und Schaltg.

● **Varianti per modello V50**
Modifications for V50 model
Variantes pour modèle V50
Umänderungen für Modell V50

35	19 99 90 50	1	Serie guarnizioni	Gasket set	Jeu de joints	Dichtung Satz
–	19 99 10 50	1	Motore completo senza cambio	Engine assy, without transmission	Moteur complet sans boite à vitesses	Motor, kpl. ohne Schaltgetriebe
–	19 99 14 50	1	Motore e cambio com.	Engine & transm. com.	Moteur et boite à vit.	Motor und Schaltg.

SEIMM MOTO GUZZI	TESTA E CILINDRO HEAD AND CYLINDER CULASSE ET CYLINDRE KOPF UND ZYLINDER		V35-V50 Tavola - Drawing Table - Bild 2

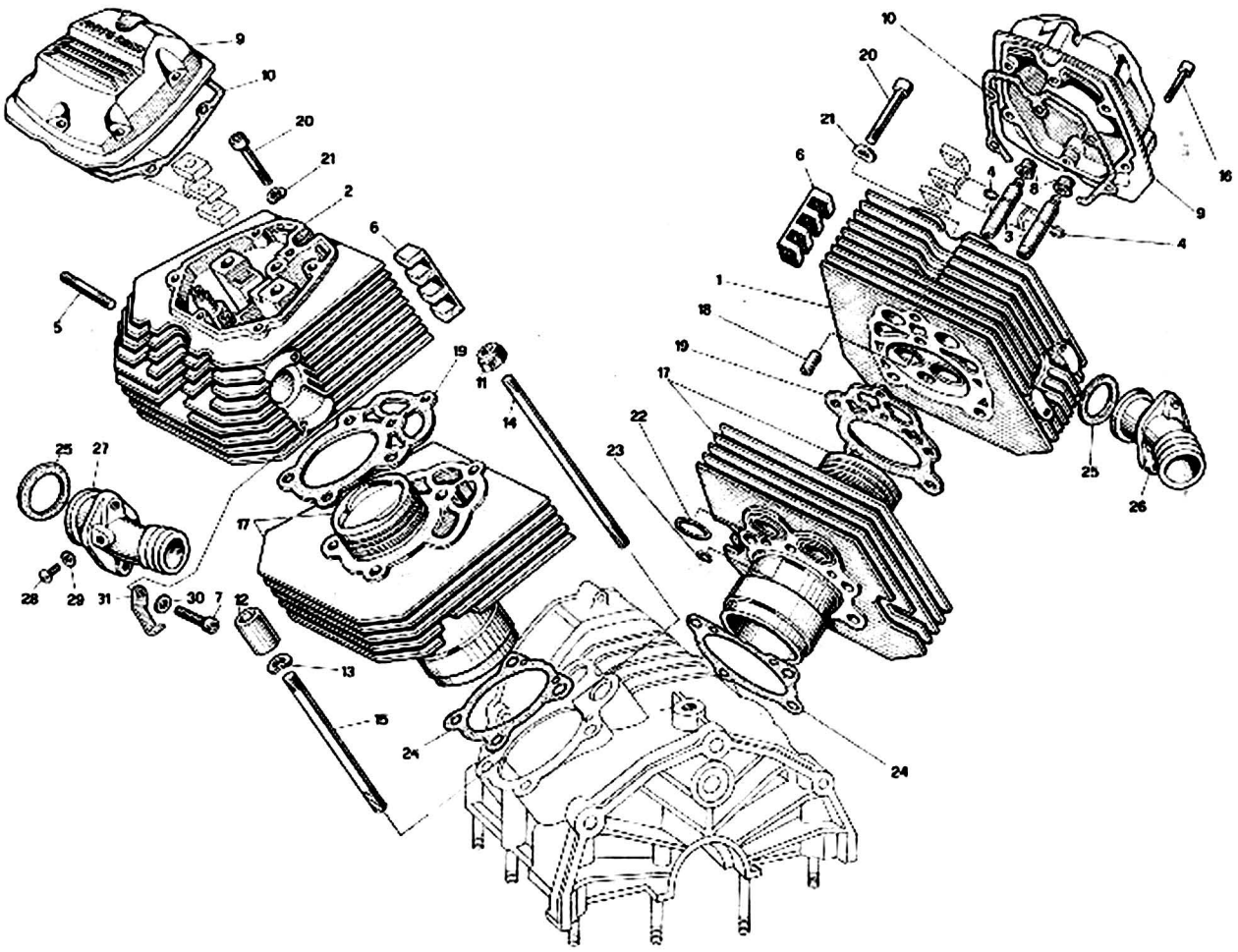

NOTE NOTES NOTES MARKE	POS. N.	N. COD. CODE No. Nr. CODE CODE Nr.	Q.tà Q.ty Q.té M.ge	DENOMINAZIONE	DESCRIPTION	DESIGNATION	BEZEICHNUNG
●	1	19 02 21 10	1	Testa destra compl.	R.H. cylinder head	Culasse D compl.	Zylinderkopf, R.
●	2	19 02 22 10	1	Testa sinistra compl.	L.H. cylinder head	Culasse G compl.	Zylinderkopf, L.
	3	61 03 68 01	4	Guidavalvole	Valve guide	Guide de soupape	Ventilführung
	4	90 35 30 09	4	Anello elastico	Circlip	Jonc élastique	Sperring
	5	96 50 60 42	4	Prigioniero	Stud bolt	Goujon	Stiftschraube
	6	19 02 53 00	4	Tassello antivibrante	Vibration damp. piece	Anti-vibrant	Schwingungdämpfer
	7	98 82 23 25	4	Vite	Screw	Vis	Schraube
	8	61 03 78 01	4	Cappellotto tenuta olio	Cap	Capuchon	Kappe
	9	19 02 35 00	2	Coperchio testa	Head cover	Couvercle culasse	Zylinderkopfdeckel
	10	19 02 37 00	2	Guarnizione per coper.	Gasket	Joint	Dichtung
	11	92 60 20 10	4	Dado prig. lungo	Nut	Ecrou	Mutter
	12	13 02 19 00	4	Dado a colonnetta	Nut	Ecrou	Mutter
	13	95 12 91 80	4	Ranella	Washer	Rondelle	Unterlegscheibe
	14	96 51 01 82	4	Tirante lungo	Long tie rod	Tirant long	Lange Tragstange
	15	96 51 01 25	4	Tirante corto	Short tie rod	Tirant court	Kurze Tragstange
	16	98 62 03 25	12	Vite fiss. coperchio	Screw	Vis	Schraube
●	17	19 06 01 00	2	Cilindro e pistone	Cylinder & piston	Cylindre et piston	Zylinder und Kolben
	18	61 00 21 00	2	Boccola di riferimento	Bush	Douille	Buchse
●	19	19 02 20 00	2	Guarnizione	Gasket	Joint	Dichtung
	20	98 62 04 45	2	Vite	Screw	Vis	Schraube
	21	61 27 03 00	2	Ranella	Washer	Rondelle	Unterlegscheibe
	22	90 70 62 52	4	Guarnizione OR	Gasket	Joint	Dichtung
	23	61 02 72 00	2	Guarnizione OR	Gasket	Joint	Dichtung
	24	19 02 08 00	2	Guarnizione	Gasket	Joint	Dichtung
	25	19 11 55 00	2	Guarnizione per pipe	Gasket	Joint	Dichtung
	26	19 11 50 50	1	Pipa aspirazione destra	R.H. manifold	Pipe D	Ansaugkrümmer, R.
	27	19 11 50 51	1	Pipa aspirazione sin.	L.H. manifold	Pipe G	Ansaugkrümmer, L.
	28	98 31 06 10	2	Vite chiusura foro	Screw	Vis	Schraube
	29	95 10 01 16	2	Ranella	Washer	Rondelle	Unterlegscheibe
	30	61 01 38 00	2	Ranella per vite	Washer	Rondelle	Unterlegscheibe
	31	19 71 80 00	2	Fascetta	Clamp	Collier	Schelle

Seimm Moto Guzzi 22054 Mandello del Lario (Co) Tel. 731112 - 732512 - Tx: 38095 - 6/77 - 2500 K Printed in Italy

Dati indicativi soggetti a modifiche senza impegno di preavviso All data are subject to modification without notice

Scanzorosciate (Bg)

V35-V50	TESTA E CILINDRO HEAD AND CYLINDER CULASSE ET CYLINDRE KOPF UND ZYLINDER		SEIMM MOTO GUZZI
Tavola - Drawing Table - Bild **2**			

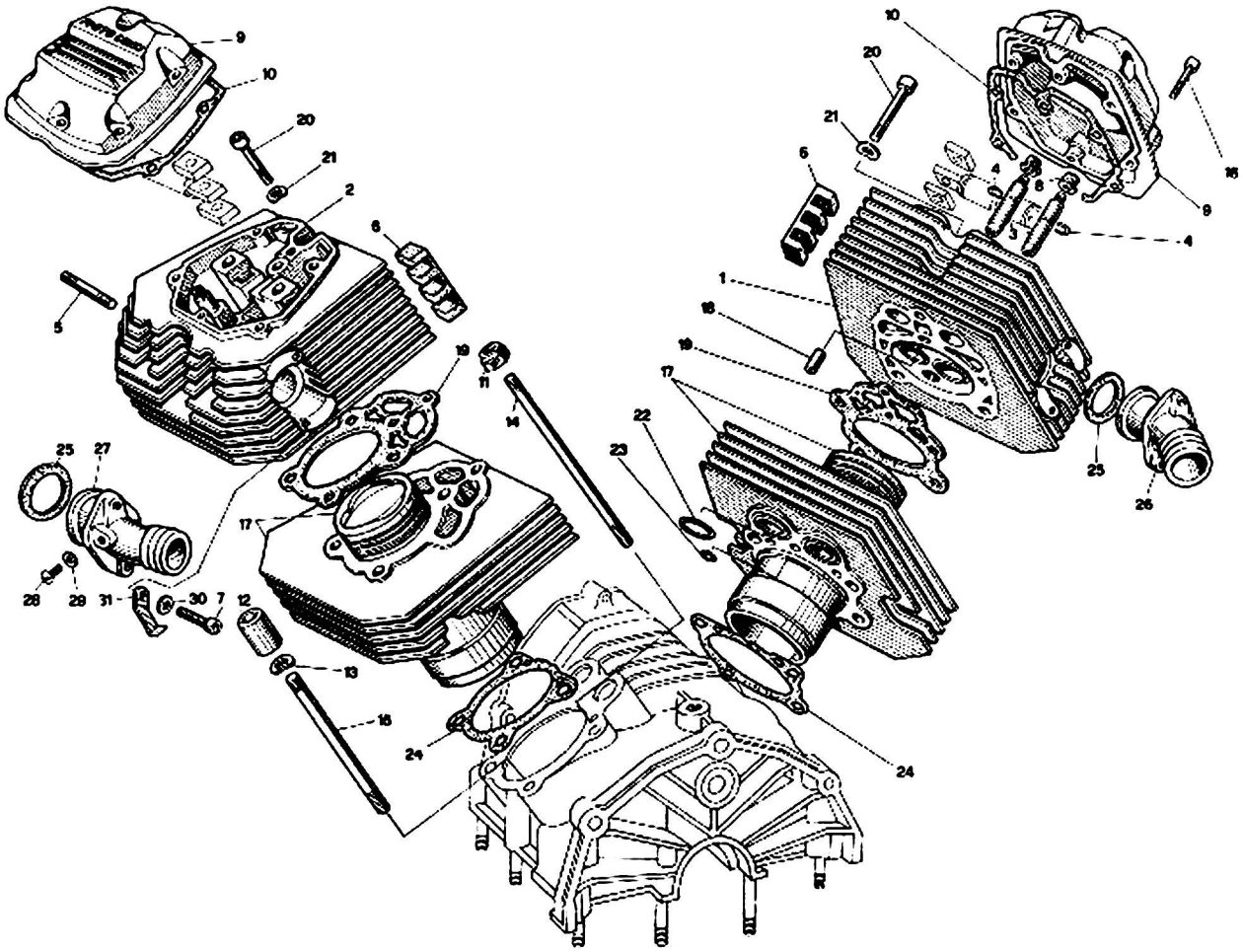

NOTE NOTES NOTES MARKE	POS. N.	N. COD. CODE No. Nr. CODE CODE Nr.	Q.tà Q.ty Q.té M.ge	DENOMINAZIONE	DESCRIPTION	DESIGNATION	BEZEICHNUNG

● **Varianti per modello V50**
Modifications for V50 model
Variantes pour modèle V50
Umänderungen für Modell V50

1	19 02 21 50	1	Testa destra compl.	R.H. cylinder head	Culasse D compl.	Zylinderkopf, R.
2	19 02 22 50	1	Testa sinistra compl.	L.H. cylinder head	Culasse G compl.	Zylinderkopf, L.
17	19 06 01 50	2	Cilindro e pistone	Cylinder & piston	Cylindre et piston	Zylinder und Kolben
19	19 02 20 50	2	Guarnizione	Gasket	Joint	Dichtung

Dati indicativi soggetti a modifiche senza impegno di preavviso All data are subject to modification without notice Stamperosciate (Rg)

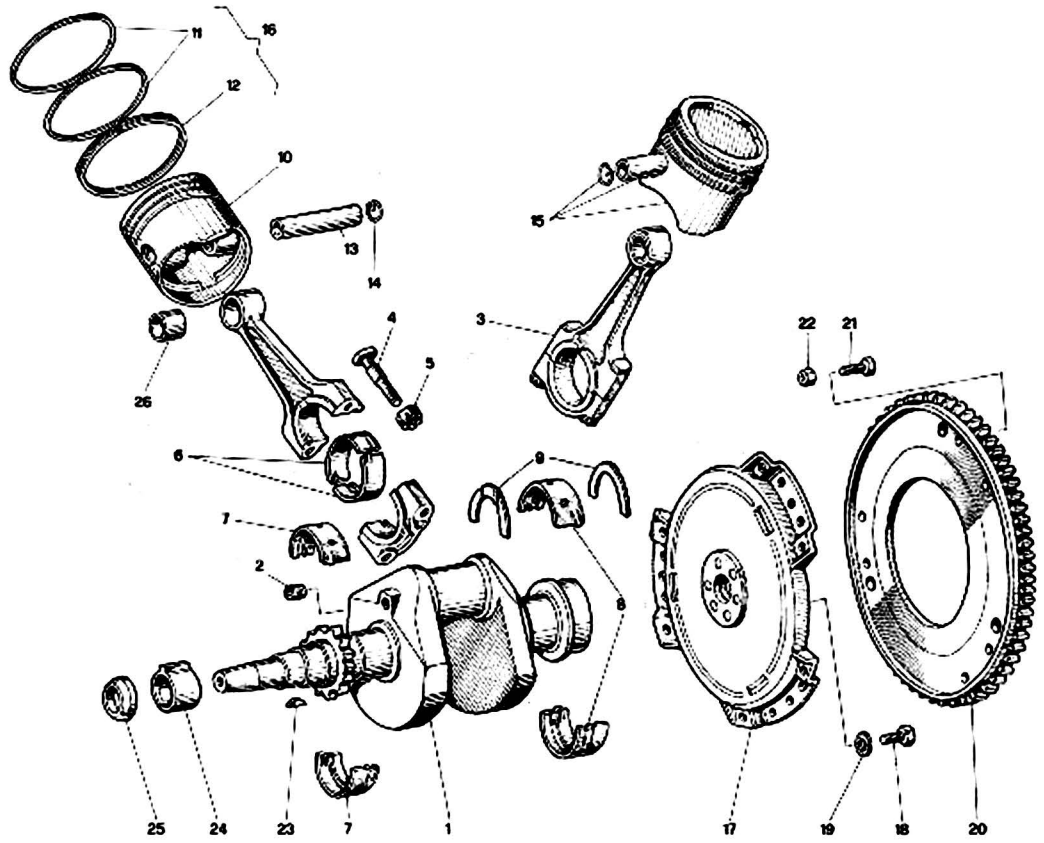

NOTE NOTES NOTES MARKE	POS. N.	N. COD. CODE No. Nr. CODE CODE Nr.	Q.tè Q.ty Q.té M.ge	DENOMINAZIONE	DESCRIPTION	DESIGNATION	BEZEICHNUNG
●	1	19 06 42 00	1	Albero motore	Crankshaft	Vilebrequin	Kurbelwelle
	2	19 06 54 00	1	Tappo	Plug	Bouchon	Stopfen
	3	19 06 15 00	2	Biella completa	Connecting rod, assy	Bielle complète	Pleuelstange, kpl.
	4	61 06 22 01	4	Vite fiss. cappello	Screw	Vis	Schraube
	5	61 06 24 01	4	Dado	Nut	Ecrou	Mutter
	6	61 06 20 10	4	Semicuscinetti di biella	Big-end half bearing	Demi-couss. de tête biel.	Pleuellagerschale
	6	61 06 20 12	4	Semicuscinetto (magg. mm 0,254)	Half-bearing (over-size mm 0.254)	Demi-coussinet majoré mm 0,254)	Lagerschale (Obergr. mm 0,254)
	7	61 06 56 00	2	Semicuscin. di banco	Main half-bearing	Demi-couss. de vilebr.	Hauptlager
	7	61 06 56 02	2	Semicuscinetto (magg. mm 0,254)	Half-bearing (over-size mm 0.254)	Demi-coussinet (majoré mm 0,254)	Lagerschale (Obergr. mm 0,254)
	8	19 06 65 00	2	Semicuscin. di banco posteriore	Rear main half-bearing	Demi-couss. de vilebr. AR	Hint. Hauptlager
	8	19 06 65 01	2	Semicuscinetto (magg. mm 0,254)	Half-bearing (over-size mm 0.254)	Demi-coussinet (majoré mm 0,254)	Lagerschale (Obergr. mm 0,254)
	9	19 06 64 00	2	Semirosetta di spall.	Half-washer	Demi-rondelle	Halb-Unterlegscheibe
	9	19 06 64 01	2	Semirosetta (magg. mm 0,2)	Half washer (over-size mm 0.2)	Demi-rondelle (majorée mm 0,2)	Halb-Unterlegscheibe (Obergr. mm 0,2)
●	10	19 06 04 00	2	Pistone nudo	Piston	Piston	Kolben
●	11	19 06 07 00	4	Fascia elastica di ten.	Piston ring	Segment d'étanchéité	Kolbenring
●	12	19 06 10 00	2	Fascia raschiaolio	Scraper ring	Segment racleur	Olabstreifring
●	13	62 06 12 00	2	Spinotto per pistone	Wrist pin	Axe du piston	Kolbenbolzen
	14	61 06 13 00	4	Anello di fermo	Retaining ring	Bague de serrage	Verschlussring
●	15	19 06 02 00	2	Pistone completo	Piston assy	Piston complet	Kolben, kpl.
●	16	19 06 06 00	1	Gruppo fascie elastiche	Piston ring set	Ensemble de seg. d'ét.	Kolbenringsatz
	17	19 08 03 00	1	Campana volano friz.	Clutch housing	Carter d'embrayage	Kupplungsgehäuse
	18	19 06 77 00	6	Vite	Screw	Vis	Schraube
	19	14 61 59 01	6	Rosetta	Washer	Rondelle	Unterlegscheibe
	20	19 06 79 00	1	Corona dentata	Crown gear	Couronne dentée	Anlasszahnkranz
	21	98 05 43 18	6	Vite fiss. corona	Screw	Vis	Schraube
	22	92 63 01 06	6	Dado autobloccante	Self-locking nut	Ecrou à autoblocage	Selbstklemmutter
	23	91 70 13 50	1	Chiavetta per rotore	Key	Languette	Keil
	24	19 72 10 00	1	Rotore d'accensione	Starter rotor	Rotor	Rotor
	25	61 06 68 00	1	Gommino	Rubber block	Caoutchouc	Gummistück
	26	19 06 18 00	2	Boccola biella	Connecting rod bush	Douille bielle	Pleuelbuchse

Dati indicativi soggetti a modifiche senza impegno di preavviso All data are subject to modification without notice

Scanzorosciate (Bg)

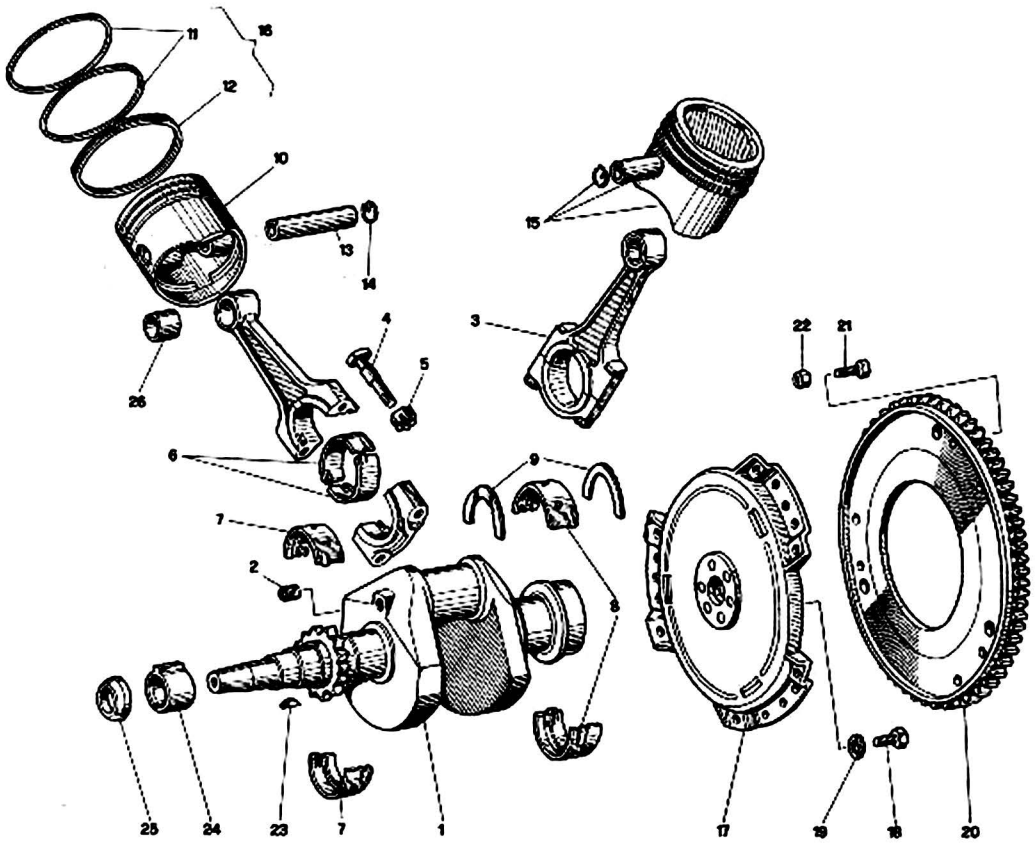

NOTE NOTES NOTES MARKE	POS. N.	N. COD. CODE No. Nr. CODE CODE Nr.	Q.tà Q.ty Q.té M.ge	DENOMINAZIONE	DESCRIPTION	DESIGNATION	BEZEICHNUNG

● **Varianti per modello V50**
Modifications for V50 model
Variantes pour modèle V50
Umänderungen für Modell V50

1	19 06 42 50	1	Albero motore	Crankshaft	Vilebrequin	Kurbelwelle
10	19 06 04 50	2	Pistone nudo	Piston	Piston	Kolben
11	19 06 07 50	4	Fascia elastica	Piston ring	Segment d'étanchéité	Kolbenring
12	19 06 10 50	2	Fascia raschiaolio	Scraper ring	Segment racleur	Olabstreifring
13	19 06 12 50	2	Spinotto	Wrist pin	Axe du piston	Kolbenbolzen
15	19 06 02 50	2	Pistone completo	Piston assy	Piston complet	Kolben, kpl.
16	19 06 06 50	1	Gruppo fascie elastiche	Piston ring set	Ensemble de seg. d'ét.	Kolbenringsatz

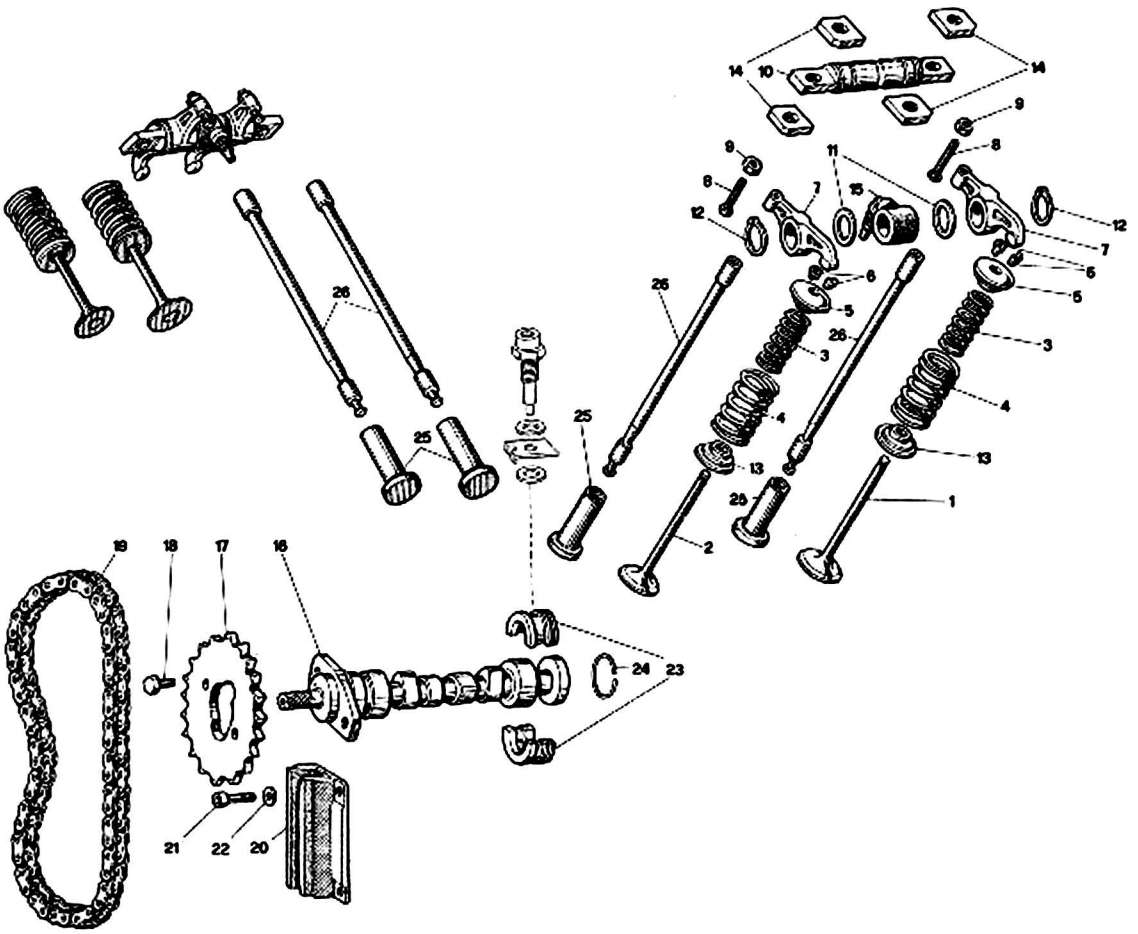

NOTE NOTES NOTES MARKE	POS. N.	N. COD. CODE No. Nr. CODE CODE Nr.	Q.tà Q.ty Q.té M.ge	DENOMINAZIONE	DESCRIPTION	DESIGNATION	BEZEICHNUNG
●	1	19 03 60 10	2	Valvola aspirazione	Intake valve	Soupape d'admission	Einlassventil
	2	19 03 61 50	2	Valvola scarico	Exhaust valve	Soupape d'échapp.	Auslassventil
	3	61 03 76 00	4	Molla interna	Inside spring	Ressort intér.	Feder
	4	61 03 75 00	4	Molla esterna	Outside spring	Ressort extér.	Feder
	5	61 03 80 00	4	Piattello superiore	Upper plate	Plaque supér.	Oberteller
	6	61 03 81 00	8	Semiconi	Cotter	Demi-cône	Kegelstück
	7	19 03 05 00	4	Bilanciere aspir. scar.	Int. & exh. rocker arm	Culbut. d'asp. et échap.	Einlass-Auslasskipphebel
	8	19 03 40 00	4	Vite	Screw	Vis	Schraube
	9	92 60 24 06	4	Dado	Nut	Ecrou	Mutter
	10	19 03 20 00	2	Perno bilancieri	Rocker arm pin	Goujon de culbuteur	Kipphebelstift
	11	19 03 23 00	4	Rosetta di rasamento	Washer	Rondelle	Unterlegscheibe
	12	90 27 10 18	4	Anello Seeger	Ring	Bague	Seegerring
	13	61 03 70 00	4	Piattello inferiore	Lower plate	Plaque infér.	Unterteller
	14	19 03 29 00	8	Spessore	Spacer	Epaisseur	Distanzstück
	15	19 02 75 00	2	Manicotto	Sleeve	Manchon	Manschette
	16	19 05 33 00	1	Albero a camme	Cam shaft	Arbre à cames	Verteilwelle
	17	19 05 44 00	1	Ingranaggio distribuz.	Timing gear	Pignons de distrib.	Nockenwellenrad
	18	61 05 49 00	2	Bullone	Bolt	Boulon	Bolzen
	19	19 05 80 00	1	Catena com. distribuz.	Timing chain	Chaine de distribution	Steuerkette
	20	19 05 84 00	1	Guida catena	Chain guide	Guide de la chaine	Kettenführung
	21	98 62 23 16	2	Vite fiss. guida	Screw	Vis	Schraube
	22	95 00 42 06	2	Rondella per vite	Washer	Rondelle	Unterlegscheibe
	23	19 05 57 00	2	Settore fermo	Sector	Secteur	Sektor
	24	90 35 30 29	1	Anello elastico	Spring ring	Bague élastique	Federring
	25	19 04 58 01	4	Punteria	Valve tappet	Poussoir de soupape	Ventilstossel
	26	19 04 50 01	4	Astina com. bilancieri	Rod	Tige	Stange

● **Varianti per modello V50**
Modifications for V50 model
Variantes pour modèle V50
Umänderungen für Modell V50

1	19 03 60 50	2	Valvola aspirazione	Intake valve	Soupape d'admission	Einlassventil

Dati indicativi soggetti a modifiche senza impegno di preavviso All data are subject to modification without notice - Scanzorosciate (Bg)

SEIMM MOTO GUZZI

ALIMENTAZIONE - SCARICO
FEEDING - EXHAUST
ALIMENTATION - ECHAPPEMENT
ZUFÜHRUNG - AUSPUFF

V35-V50

Tavola - Drawing
Table - Bild **5**

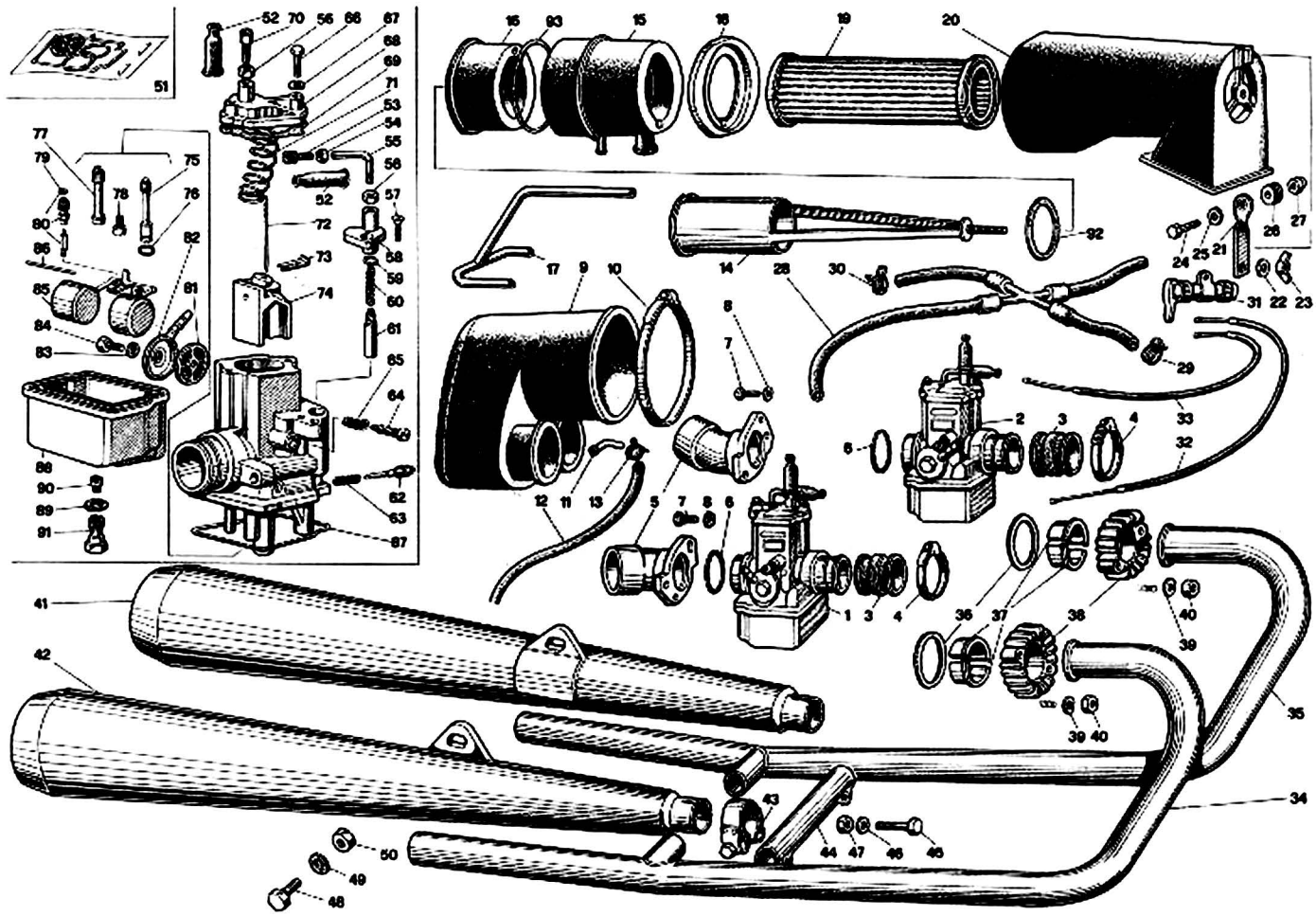

NOTE NOTES NOTES MARKE	POS. N.	N. COD. CODE No. Nr. CODE CODE Nr.	Q.tà Q.ty Q.té M.ge	DENOMINAZIONE	DESCRIPTION	DESIGNATION	BEZEICHNUNG
●	1	19 11 26 10	1	Carbur. dx. VHB 24	R.H. carbur. VHB 24	Carbur. D VHB 24	Vergaser R. VHB 24
●	2	19 11 26 11	1	Carbur. sx. VHB 24	L.H. carbur. VHB 24	Carbur. G VHB 24	Vergaser L. VHB 24
	3	61 11 43 00	2	Manicotto	Sleeve	Manchon	Manschette
	4	93 30 50 25	4	Fascetta	Clamp	Collier	Schelle
	5	19 11 44 00	2	Cornetto presa aria	Air intake	Prise d'eau	Lufteinlassrohr
	6	90 70 63 15	2	Anello di tenuta	Seal ring	Bague d'étanchéité	Dichtring
	7	98 05 42 14	4	Vite	Screw	Vis	Schraube
	8	95 00 42 05	4	Ranella	Washer	Rondelle	Unterlegscheibe
	9	19 11 43 00	1	Collettore aspirazione	Induction manifold	Collecteur d'admission	Ansaugsammler
	10	93 30 50 92	1	Fascetta	Clamp	Collier	Schelle
	11	17 11 46 50	1	Tubetto	Pipe	Tuyau	Rohr
	12	95 98 55 32	1	Tubo sfiato	Breather pipe	Tuyau de décharge	Entlufterrohr
	13	14 60 96 50	1	Fascetta per tubo	Clamp	Collier	Schelle
	14	19 15 57 00	1	Supporto filtro	Filter support	Support filtre	Filterhalter
	15	19 15 67 00	1	Elemento anter. sfiato	Front breather element	Elément AV décharge	Entlufterteil, Vord.
	16	19 15 69 00	1	Elemento post. sfiato	Rear breather element	Elément AR décharge	Entluftertail, Hint.
	17	19 15 60 00	1	Tubo sfiato interno	Inside vent hose	Tuyau de reniflard int.	Entluftungsschlauch
	18	17 11 34 50	1	Fondello di guida	Ring	Anneau	Ring
	19	17 11 36 50	1	Filtro aria	Filter cartridge	Cartouche filtre	Luftfilterpatrone
	20	17 11 40 50	1	Custodia filtro	Air filter chamber	Chambre de filtre air	Luftfilterkamer
	21	19 11 41 00	1	Piastra di supporto	Plate	Plaque	Platte
	22	95 10 00 59	1	Ranella	Washer	Rondelle	Unterlegscheibe
	23	92 67 03 05	1	Dado ad alette	Wing nut	Ecrou-papillon	Flügelmutter
	24	98 05 22 22	1	Vite	Screw	Vis	Schraube
	25	95 10 00 59	1	Ranella	Washer	Rondelle	Unterlegscheibe
	26	91 55 10 85	1	Gommino	Rubber block	Caoutchouc	Gummistück
	27	92 63 01 05	1	Dado nylon	"nylon" nut	Ecrou en nylon	Nylonmütter
	28	19 10 65 50	1	Tubazione benzina	Fuel pipe	Tuyau d'alim. essence	Kraftstoffleitung
	29	61 10 84 00	2	Fascetta	Clamp	Collier	Schelle
	30	61 10 85 00	2	Fascetta	Clamp	Collier	Schelle
	31	19 13 31 00	1	Dispositivo com. starter	Starter device	Dispositif de démarr.	Startvorrichtung
	32	19 13 35 00	1	Trasm. starter destro	R.H. starter cable	Fil de démarr. D	Startkabel, R.
	33	19 13 40 00	1	Trasm. starter sinistro	L.H. starter cable	Fil de démarr. G	Startkabel, L.
	34	19 12 07 00	1	Tubo di scarico destro	R.H. exhaust pipe	Tuyau d'échapp. D	Auspuffrohr, R.
	35	19 12 07 05	1	Tubo di scarico sin.	L.H. exhaust pipe	Tuyau d'échapp. G	Auspuffrohr, L.
	36	61 02 52 00	2	Guarnizione	Gasket	Joint	Dichtung

Seimm Moto Guzzi - 22054 Mandello del Lario (Co) Tel. 731112 - 732512 - Tx: 38095 - 6/77 - 2500 K Printed in Italy

Dati indicativi soggetti a modifiche senza impegno di preavviso All data are subject to modification without notice Scanzorosciate (Bg)

V35-V50	ALIMENTAZIONE - SCARICO FEEDING - EXHAUST ALIMENTATION - ECHAPPEMENT ZUFÜHRUNG - AUSPUFF		SEIMM MOTO GUZZI
Tavola - Drawing Table - Bild **5**			

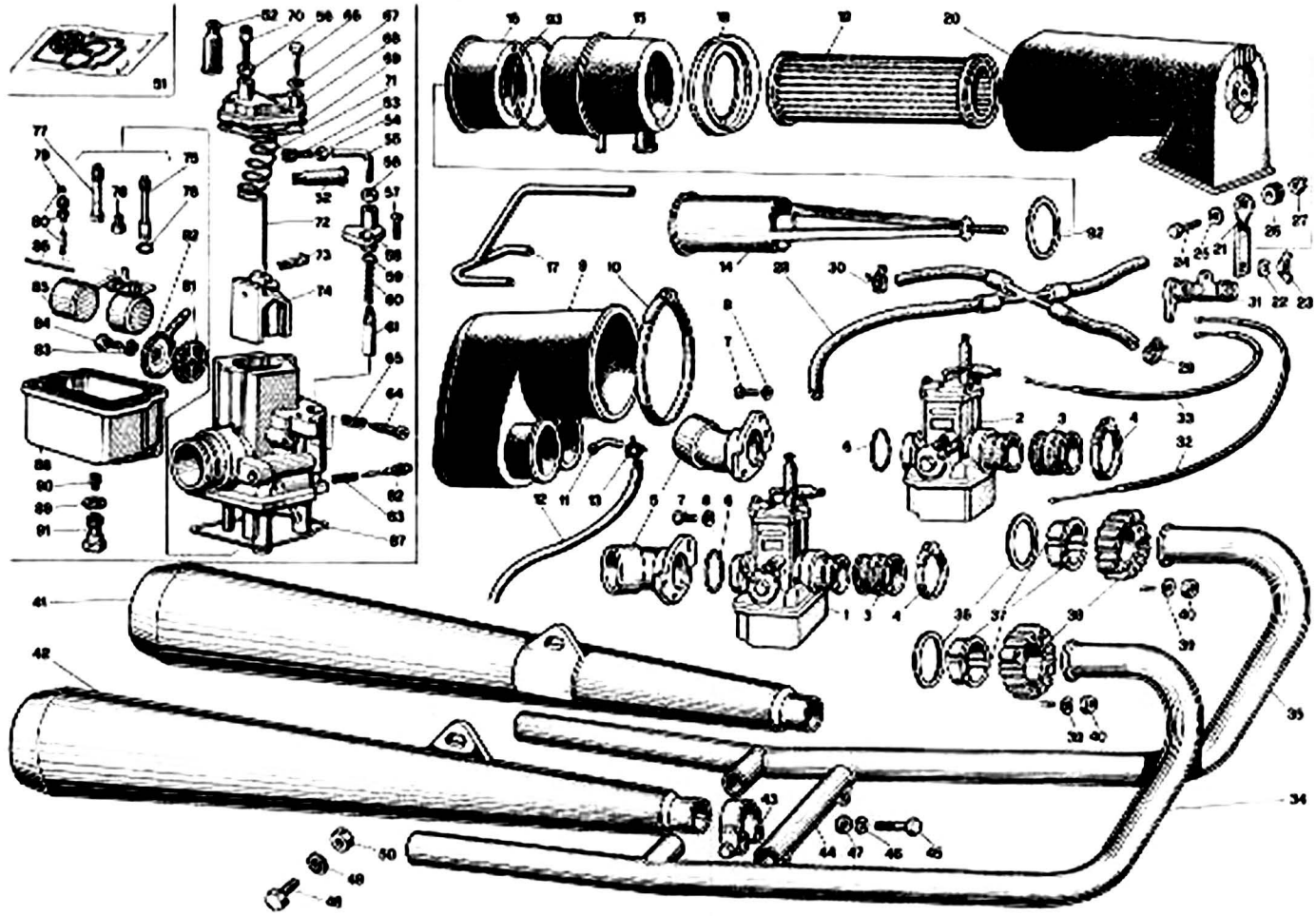

NOTE NOTES NOTES MARKE	POS. N.	N. COD. CODE No. Nr. CODE CODE Nr.	Q.te Q.ty Q.té M.ge	DENOMINAZIONE	DESCRIPTION	DESIGNATION	BEZEICHNUNG
	37	61 02 54 00	4	Distanziale	Spacer	Entretoise	Distanzstück
	38	61 02 51 00	2	Ghiera	Ring nut	Collier	Ring
	39	61 01 38 00	4	Ranella	Washer	Rondelle	Unterlegscheibe
	40	92 70 10 62	4	Dado	Nut	Ecrou	Mutter
	41	19 12 29 00	1	Silenziatore sin.	L.H. silencer	Silencieux G	Schalldämpfer, L.
	42	19 12 30 00	1	Silenziatore destro	R.H. silencer	Silencieux D	Schalldämpfer, R.
	43	19 12 34 00	2	Fascetta	Clamp	Collier	Schelle
	44	19 12 11 00	1	Tubo di collegamento	Connecting pipe	Tuyau de liaison	Verbindungsrohr
	45	98 05 23 30	2	Vite	Screw	Vis	Schraube
	46	95 00 02 06	2	Ranella	Washer	Rondelle	Unterlegscheibe
	47	92 60 22 06	2	Dado	Nut	Ecrou	Mutter
	48	98 05 45 22	2	Vite	Screw	Vis	Schraube
	49	95 02 11 10	2	Rondella elastica	Spring washer	Rondelle élastique	Federscheibe
	50	92 60 24 10	2	Dado	Nut	Ecrou	Mutter
•	51	39 93 99 00	2	Busta guarnizioni carb.	Gasket set	Jeu de joints	Dichtungsatz
	52	13 93 70 00	4	Cappuccio	Cap	Capuchon	Kappe
	53	49 93 87 00	2	Vite tendifilo	Screw	Vis	Schraube
	54	49 93 88 00	2	Dado	Nut	Ecrou	Mutter
	55	49 93 89 00	2	Tubetto deviatore	Pipe	Tuyau	Rohr
	56	12 93 73 00	4	Dado	Nut	Ecrou	Mutter
	57	13 93 79 00	2	Vite	Screw	Vis	Schraube
	58	17 93 74 50	2	Coperchio dispos. avv.	Starter device cover	Couvercle dispos. dém.	Startvorr. Deckel
•	59		2	Guarnizione	Gasket	Joint	Dichtung
	60	25 93 76 00	2	Molla	Spring	Ressort	Feder
	61	13 93 78 00	2	Valvola avviamento	Starter valve	Soupape de démarr.	Startventil
	62	13 93 62 00	2	Vite reg. minimo	Screw	Vis	Schraube
	63	13 93 63 00	2	Molla	Spring	Ressort	Feder
	64	13 93 66 00	2	Vite reg. valvola gas	Screw	Vis	Schraube
	65	13 93 67 00	2	Molla	Spring	Ressort	Feder
	66	13 93 28 00	4	Vite fiss. cop. valv.	Screw	Vis	Schraube
	67	55 93 29 00	4	Rondella elastica	Spring washer	Rondelle élastique	Federscheibe
	68	53 93 50 00	2	Coperchio valvola	Valve cover	Couvercle soupape	Ventildeckel
•	69		2	Guarnizione	Gasket	Joint	Dichtung
	70	12 93 72 00	2	Vite tendifilo	Screw	Vis	Schraube
	71	53 93 71 00	2	Molla	Spring	Ressort	Feder
	72	19 93 49 00	2	Spillo conico	Needle	Pointeau conique	Kon. Nadel

Seimm Moto Guzzi - 22054 Mandello del Lario (Co) - Tel. 731112 - 732512 - Tx: 38095 - 6/77 - 2500 K

Printed in Italy

Dati indicativi soggetti a modifiche senza impegno di preavviso - All data are subject to modification without notice

Scanzorosciate (Bg)

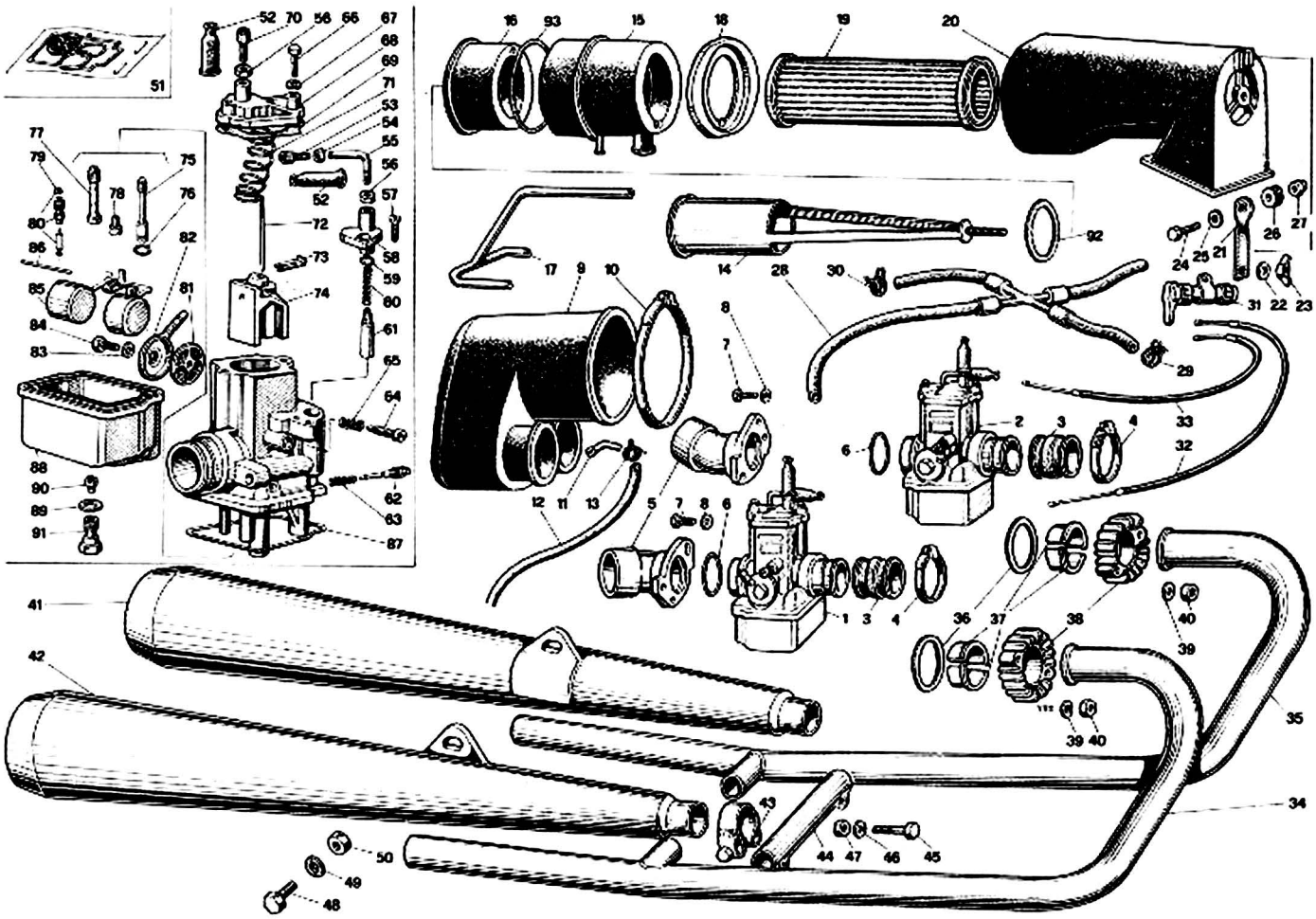

NOTE NOTES NOTES MARKE	POS. N.	N. COD. CODE No. Nr. CODE CODE Nr.	Q.tà Q.ty Q.té M.ge	DENOMINAZIONE	DESCRIPTION	DESIGNATION	BEZEICHNUNG
	73	55 93 85 85	2	Fermaglio	Fastener clip	Goujon	Klemme
	74	61 93 48 00	2	Valvola gas	Gas valve	Soupape de gaz	Gasventil
	75	19 93 60 00	2	Getto avviamento	Starting jet	Gicleur démarreur	Anlassvergasung
*	76		2	Guarnizione	Gasket	Joint	Dichtung
	77	19 93 55 00	2	Polverizzatore (AH)	Fuel nozzle (AH)	Pulvérisateur (AH)	Einspritzdüse (AH)
	78	19 93 59 00	2	Getto minimo	Slow running jet	Gicleur ralenti	Mind. Vergasung
	79	14 93 17 50	2	Guarnizione	Gasket	Joint	Dichtung
	80	19 93 46 00	2	Valvola spillo	Needle valve	Soupape à aiguilles	Nadelventil
*	81		2	Filtro benzina	Fuel filter	Filtre essence	Benzinfilter
	82	35 93 46 70	2	Pipetta racc. tubo	Union	Tuyau de raccord	Pipette
*	83		2	Guarnizione	Gasket	Joint	Dichtung
	84	13 93 49 00	2	Vite	Screw	Vis	Schraube
	85	61 93 43 00	2	Galleggiante	Float	Flotteur	Schwimmer
	86	13 93 31 00	2	Perno galleggiante	Pin	Pivot	Stift
*	87		2	Guarnizione	Gasket	Joint	Dichtung
	88	10 93 44 00	2	Vaschetta	Chamber	Cuvette	Becken
*	89		2	Guarnizione tappo	Gasket	Joint	Dichtung
●	90	19 93 57 00	2	Getto massimo	Main jet	Gicleur principal	Max. Vergasung
	91	10 93 37 00	2	Tappo fiss. vaschetta	Chamber plug	Bouchon cuvette	Beckenzapfen
	92	19 11 39 00	1	Guarnizione	Gasket	Joint	Dichtung
	93	90 70 65 72	1	Anello di tenuta	Seal ring	Bague d'étanchéité	Dichtring

*** I particolari contrassegnati con (*) sono componenti della Busta Guarnizioni carburatore - Items marked with (*) belong to Carburetor Gasket Set - Les pièces marquées avec (*) composent le jeu de joints carburateur - Die mit (*) gezeichneten Teile gehören dem Vergaserdichtungssatz.**

● **Varianti per modello V50**
Modifications for V50 model
Variantes pour modèle V50
Umänderungen für Modell V50

1	19 11 26 50	1	Carbur. dx. VHB 24	R.H. carbur. VHB 24	Carbur. D VHB 24	Vergaser R. VHB 24
2	19 11 26 51	1	Carbur. sx. VHB 24	L.H. carbur. VHB 24	Carbur. G VHB 24	Vergaser L. VHB 24
90	19 93 57 50	1	Getto massimo	Main jet	Gicleur principal	Max. Vergasung

Seimm Moto Guzzi 22054 Mandello del Lario (Co) Tel. 731112 - 732512 - Tx: 38095 - 6/77 - 2500 K Printed in Italy

Dati indicativi soggetti a modifiche senza impegno di preavviso All data are subject to modification without notice Scanzorosciate (Bg)

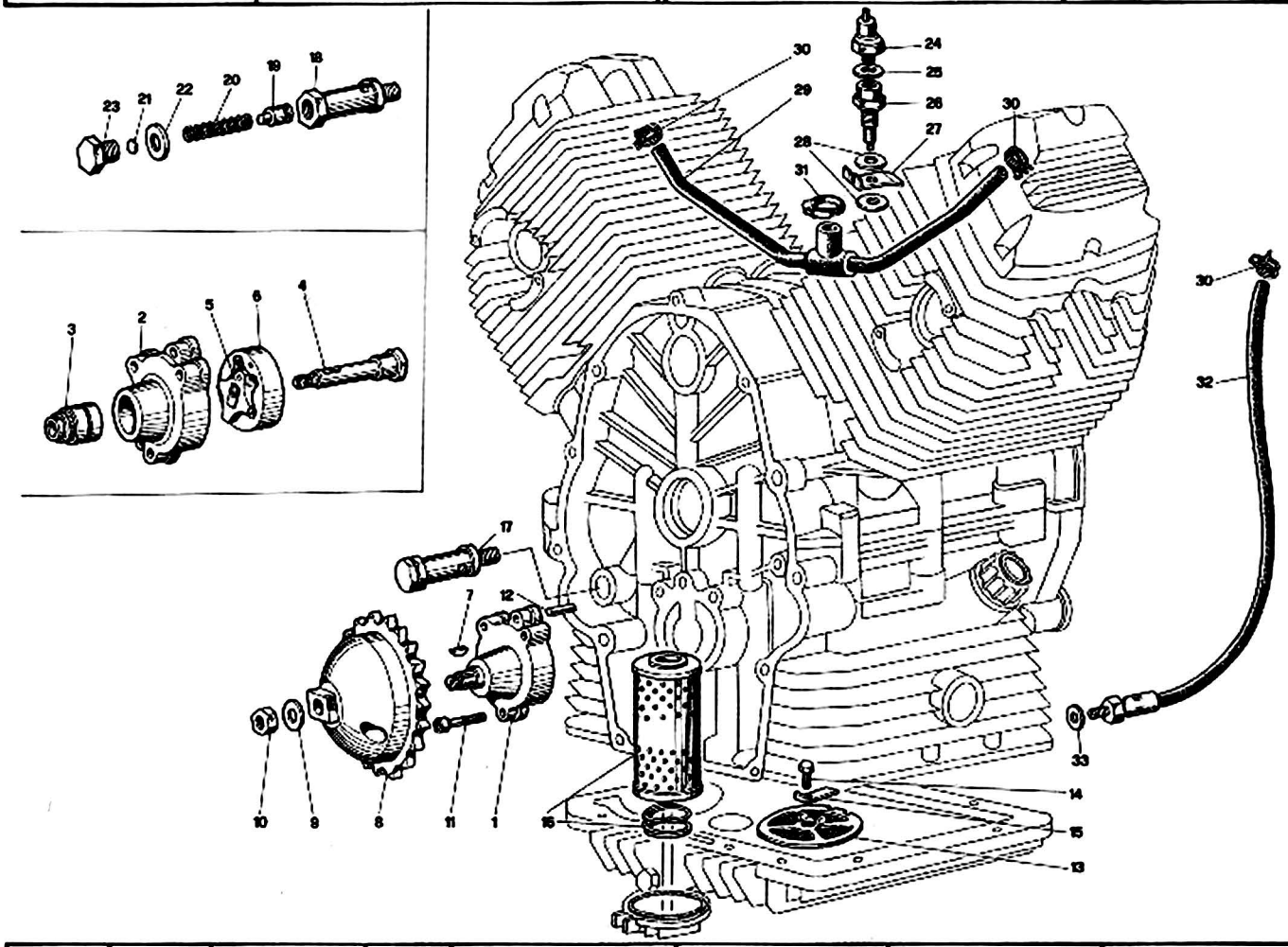

NOTE NOTES NOTES MARKE	POS. N.	N. COD. CODE No. Nr. CODE CODE Nr.	Q.tà Q.ty Q.té M.ge	DENOMINAZIONE	DESCRIPTION	DESIGNATION	BEZEICHNUNG
	1	19 14 64 00	1	Pompa olio con rot.	Oil pump with rotor	Pompe à huile avec rot.	Olpumpe mit Rotor
	2	19 14 65 00	1	Corpo pompa olio	Oil pump housing	Corps de pompe à huile	Olpumpegehäuse
	3	92 25 22 10	1	Cuscinetto a rullini	Needle bearing	Roulement à aiguilles	Nadellager
	4	19 14 78 00	1	Albero ingr. pompa	Pump gear shaft	Arbre engr. pompe	Pumpezahnradwelle
	5	19 14 84 00	1	Rotore interno	Inside rotor	Rotor intérieur	Innerrotor
	6	19 14 86 00	1	Rotore esterno	Outside rotor	Rotor extérieur	Aussenrotor
	7	13 14 83 00	1	Chiavetta	Key	Clavette	Keil
	8	19 14 77 00	1	Ingranaggio com. pom.	Pump driving gear	Engr. d'entr. pompe	Pumpezahnrad
	9	19 14 98 00	1	Rondella di sicurezza	Washer	Rondelle	Unterlegscheibe
	10	92 60 25 10	1	Dado	Nut	Ecrou	Mutter
	11	98 62 03 30	3	Vite	Screw	Vis	Schraube
	12	95 51 20 62	2	Spina di riferimento	Pin	Clavette	Stift
	13	19 15 22 00	1	Filtro olio a rete	Gauze	Tamis	Sieb
	14	98 05 43 14	1	Vite	Screw	Vis	Schraube
	15	95 18 70 06	1	Piastrina di sicurezza	Lock plate	Plaquette frein	Schliessblech
	16	19 15 30 00	1	Cartuccia filtro olio	Cartridge	Cartouche	Patrone
	17	10 15 82 01	1	Valvola reg.press. olio	Control valve	Clapet de décharge	Drucksteuerventil
	18	10 15 87 01	1	Corpo per valvola	Valve housing	Corps de clapet	Ventilgehäuse
	19	12 15 09 00	1	Pistone con valvola	Valve piston	Piston de clapet	Ventilkolben
	20	94 32 10 72	1	Molla	Spring	Ressort	Feder
	21	12 15 07 00	1	Fondello	Bottom disc	Rondelle butée	Verschlussscheibe
	22	95 10 05 22	1	Guarnizione	Gasket	Joint	Dichtung
	23	12 15 90 00	1	Tappo	Plug	Bouchon	Stopfen
	24	17 76 87 50	1	Trasmettitori segnali	Oil indicator	Mano-contact	Ölanzeige
	25	12 00 64 00	1	Rondella in alluminio	Washer	Rondelle	Unterlegscheibe
	26	19 05 58 00	1	Raccordo	Union	Raccord	Rohrverbindung
	27	19 05 59 00	1	Piastrina di sicurezza	Lock plate	Plaquette frein	Schliessblech
	28	12 00 64 00	2	Guarnizione	Gasket	Joint	Dichtung
	29	19 15 96 00	1	Tubazione sfiato	Breather	Reniflard	Entluftungsschlauch
	30	61 10 84 00	3	Fascetta	Clamp	Collier	Schelle
	31	12 15 78 00	1	Fascetta	Clamp	Collier	Schelle
	32	19 15 93 00	1	Tubaz. recupero olio	Return pipe	Tuyau de retour	Rücklaufrohr
	33	12 15 42 00	1	Rondella	Washer	Rondelle	Unterlegscheibe

Seimm Moto Guzzi - 22054 Mandello del Lario (Co) Tel. 731112 - 732512 - Tx: 38095 - 6/77 - 2500 K Printed in Italy

Dati indicativi soggetti a modifiche senza impegno di preavviso All data are subject to modification without notice Scanzorosciate (Bg)

SEIMM MOTO GUZZI	FRIZIONE CLUTCH EMBRAYAGE KUPPLUNG		V35-V50 Tavola - Drawing Table - Bild 7

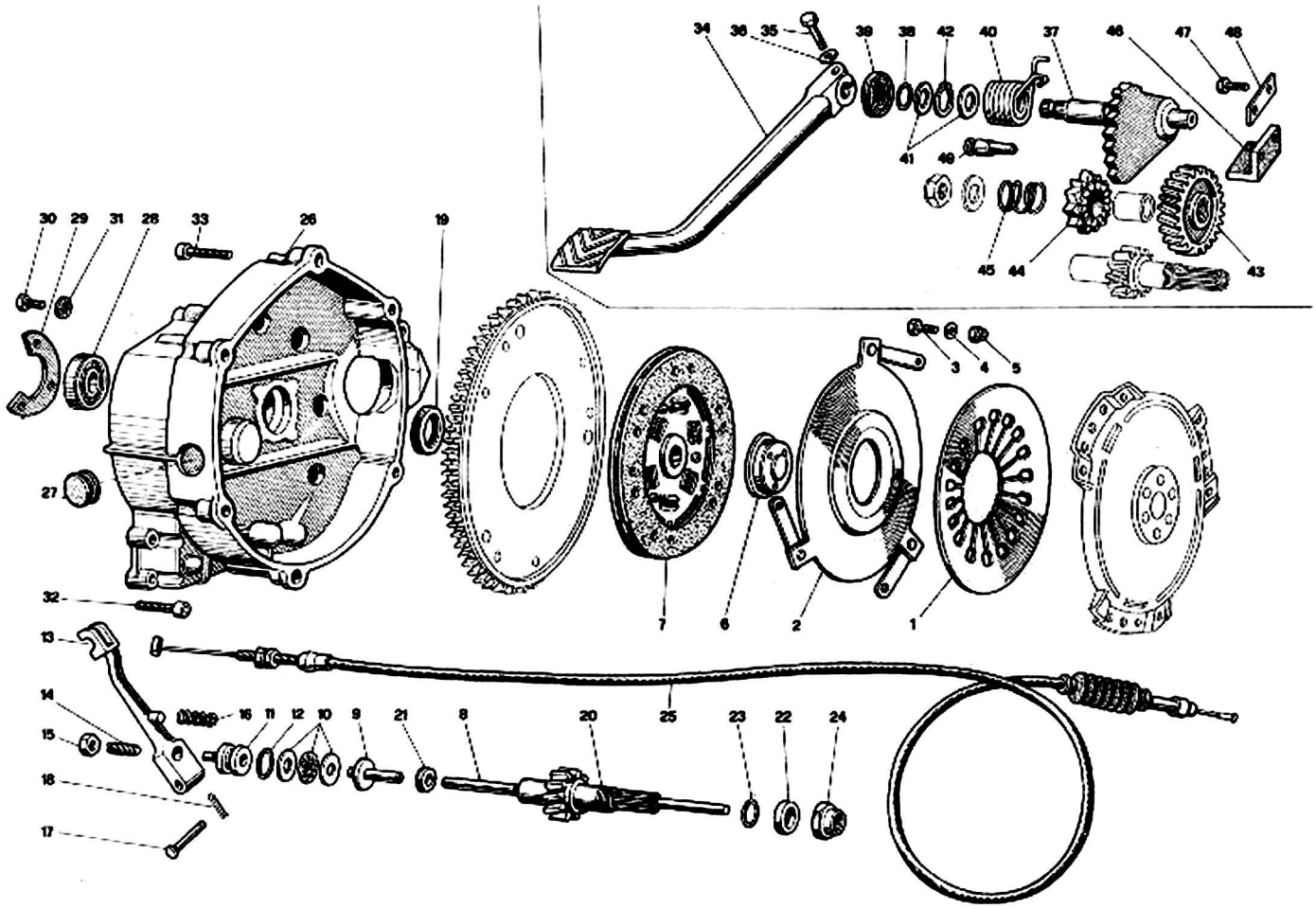

NOTE NOTES NOTES MARKE	POS. N.	N. COD. CODE No. Nr. CODE CODE Nr.	Q.tà Q.ty Q.tè M.ge	DENOMINAZIONE	DESCRIPTION	DESIGNATION	BEZEICHNUNG
	1	19 08 41 00	1	Molla a diaframma	Spring	Ressort	Feder
	2	19 08 26 00	1	Piattello spingimolla	Pressure plate	Plateau de pression	Druckplatte
	3	98 05 42 14	3	Vite	Screw	Vis	Schraube
	4	95 00 42 05	3	Rondella piana	Washer	Rondelle	Unterlegscheibe
	5	92 63 01 05	3	Dado autobloccante	Self-locking nut	Ecrou à autoblocage	Selbstklemmutter
	6	19 08 34 00	1	Scodellino	Cup	Coupelle	Manschette
	7	19 08 23 50	1	Disco condotto	Driven disc	Disque conduit	Angetriebene Scheibe
	8	19 08 57 00	1	Asta spingipiattello	Rod	Tige	Stift
	9	14 08 60 00	1	Corpo interno	Inner body	Corps intérieur	Innengehäuse
	10	12 08 70 01	1	Cuscinetto reggispinta	Thrust bearing	Butée d'embrayage	Drucklager
	11	14 08 61 00	1	Corpo esterno	Outer body	Corps extérieur	Aussengehäuse
	12	90 70 61 70	1	Anello di tenuta	Seal ring	Bague d'étanchéité	Dichtring
	13	14 09 02 01	1	Leva disinnesto friz.	Operating lever	Levier de dégagement	Ausrückhebel
	14	14 09 04 00	1	Vite registro leva	Adjusting screw	Vis de réglage	Stellschraube
	15	92 60 25 08	1	Dado	Nut	Ecrou	Mutter
	16	94 32 11 05	1	Molla	Spring	Ressort	Feder
	17	95 78 02 71	1	Spina	Pin	Axe	Stift
	18	95 50 02 22	1	Copiglia	Cotter pin	Goupille	Splint
	19	90 40 27 36	1	Anello di tenuta	Seal ring	Bague d'étanchéité	Dichtring
●	20	19 21 07 00	1	Albero di rinvio (Z 13)	Countershaft (Z 13)	Arbre interm. (Z 13)	Vorgelegewelle (Z 13)
	21	90 40 06 16	1	Anello di tenuta	Seal ring	Bague d'étanchéité	Dichtring
	22	19 21 37 00	1	Distanziale	Spacer	Entretoise	Distanzstück
	23	90 70 61 88	1	Anello di tenuta	Seal ring	Bague d'étanchéité	Dichtring
	24	19 35 67 00	1	Dado di sicurezza	Nut	Ecrou	Mutter
	25	19 09 30 51	1	Trasmiss. com. friz.	Clutch cable	Câble d'embrayage	Kupplungskabel
	26	19 20 04 00	1	Campana frizione	Clutch housing	Boitier d'embrayage	Kupplungslocke
	27	93 18 02 20	1	Tappo	Plug	Bouchon	Propfen
	28	92 20 11 20	1	Cuscinetto	Bearing	Roulement	Lager
	29	19 20 34 00	1	Piastra fiss. cuscin.	Plate	Plaque	Platte
	30	98 05 43 14	3	Vite	Screw	Vis	Schraube
	31	14 21 79 01	3	Rosetta di sicurezza	Washer	Rondelle	Unterlegscheibe
	32	98 62 03 30	11	Vite	Screw	Vis	Schraube
	33	98 62 04 35	6	Vite	Screw	Vis	Schraube
*	34	19 26 04 00	1	Leva com. avviamento	Starter control lever	Levier comm. démarr.	Starthebel
*	35	98 05 24 30	1	Vite fiss. leva	Screw	Vis	Schraube
*	36	95 00 42 08	1	Rondella	Washer	Rondelle	Unterlegscheibe

Seimm Moto Guzzi - 22054 Mandello del Lario (Co) - Tel. 731112 - 732512 - Tx: 38095 - 6/77 - 2500 K Printed in Italy

Dati indicativi soggetti a modifiche senza impegno di preavviso All data are subject to modification without notice Scanzorosciate (Bg)

V35-V50	FRIZIONE CLUTCH EMBRAYAGE KUPPLUNG		SEIMM MOTO GUZZI
Tavola - Drawing Table - Bild 7			

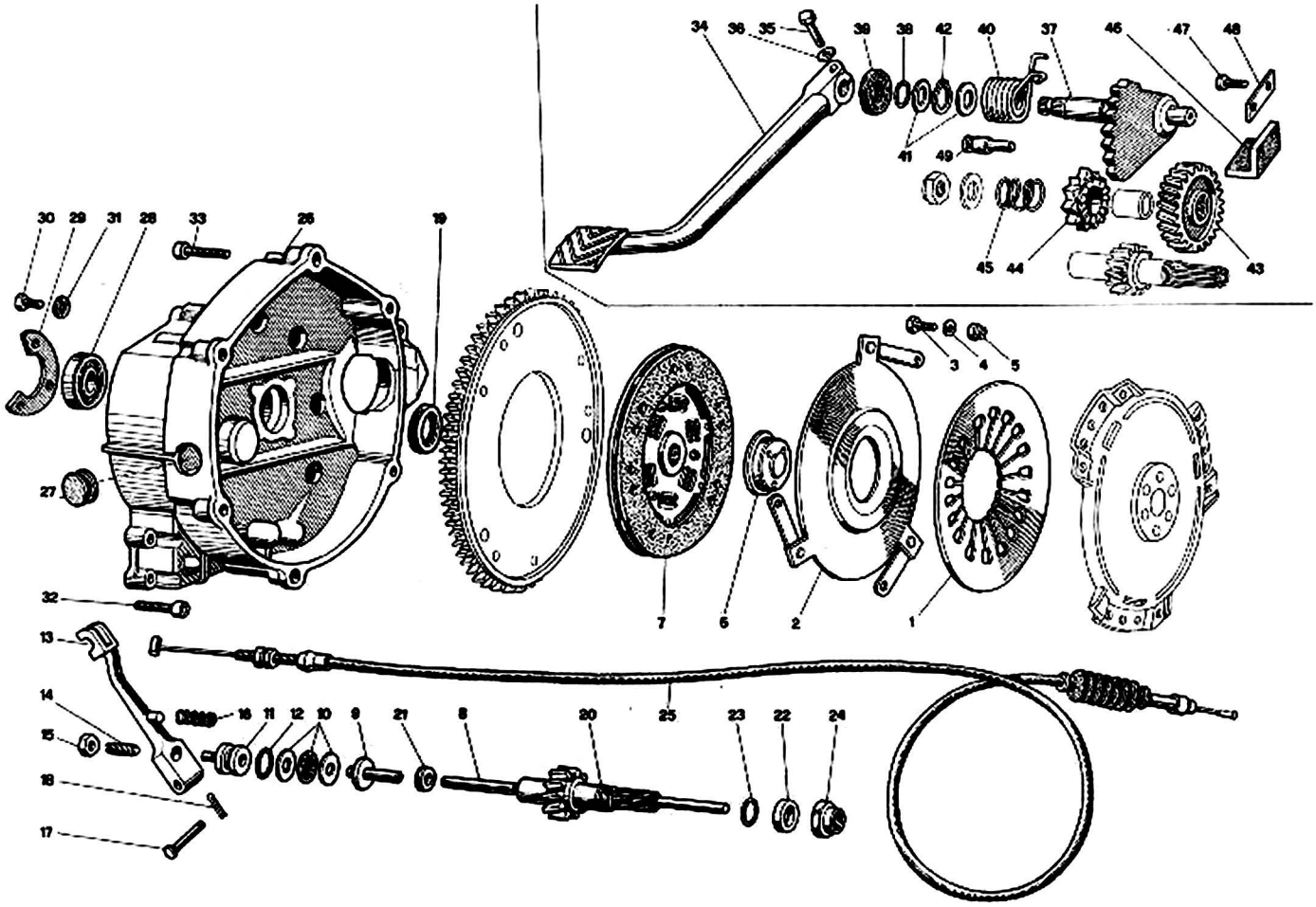

NOTE NOTES NOTES MARKE	POS. N.	N. COD. CODE No. Nr. CODE CODE Nr.	Q.tà Q.ty Q.tè M.ge	DENOMINAZIONE	DESCRIPTION	DESIGNATION	BEZEICHNUNG
*	37	19 26 40 00	1	Settore per messa in m.	Startersector	Secteur pour démarr.	Anlasssektor
*	38	90 70 61 88	1	Anello di tenuta OR	Seal ring	Bague d'étanchéité	Dichtring
*	39	90 40 18 32	1	Anello di tenuta	Seal ring	Bague d'étanchéité	Dichtring
*	40	61 26 57 00	1	Molla	Spring	Ressort	Feder
*	41	19 03 23 00	2	Rosetta di rasamento	Washer	Rondelle	Unterlegscheibe
*	42	90 27 10 18	1	Anello seeger	Snap ring	Jonc d'arrêt	Seegerring
*	43	19 21 11 00	1	Ingran. rinvio A.P. (V 35 Z = 24)	O.S. intermediate gear (V 35 Z = 24)	Engren. de renvoi A. P. (V 35 Z = 24)	Zahnradvorgel. H.W. (V 35 Z = 24)
*	43	19 21 11 50	1	Ingran. rinvio A.P. (V 50 Z = 23)	O.S. intermediate gear (V 50 Z= 23)	Engren. de renvoi A.P. (V 50 Z = 23)	Zahnradvorgel. H.W. (V 50 Z = 23)
*	44	19 26 66 00	1	Ingran. per messa in m.	Startergear	Engrenage pour démarr.	Anlasszahnrad
*	45	19 26 62 00	1	Molla	Spring	Ressort	Feder
*	46	19 26 33 00	1	Tassello	Block	Goujon	Stück
*	47	98 05 43 14	2	Vite	Screw	Vis	Schraube
*	48	19 23 59 00	1	Piastrina di sicurezza	Lock plate	Plaquette frein	Schliessblech
*	49	19 20 26 00	1	Perno	Pin	Axe	Stift
**	–	19 20 02 01	1	Scatola cambio	Transmission case	Carter de boite à vit.	Getriebegehäuse
**	–	19 20 04 01	1	Campana frizione	Clutch housing	Boitier d'embrayage	Kupplungslocke

* Particolari forniti a richiesta - Items available on request - Les pièces sont fournies sur demande - Teile geliefert auf Verlangen

** Sostituisce il particolare 19 20 02 00 e 19 20 04 00 - Substitutes item 19 20 02 00 and 19 20 04 00 - Remplace la pièce 19 20 02 00 et 19 20 04 00 - Diese Teile ersetzt 19 20 02 00 und 19 20 04 00

● Varianti per modello V50
Modifications for V50 model
Variantes pour modèle V50
Umänderungen für Modell V50

20	19 21 07 50	1	Albero di rinvio (Z 14)	Countershaft (Z 14)	Arbre interm. (Z 14)	Vorgelegewelle (Z 14)

Seimm Moto Guzzi - 22054 Mandello del Lario (Co) - Tel. 731112 - 732512 - Tx: 38095 - 6/77 - 2500 K - Printed in Italy

Dati indicativi soggetti a modifiche senza impegno di preavviso - All data are subject to modification without notice - Scanzorosciate (Bg)

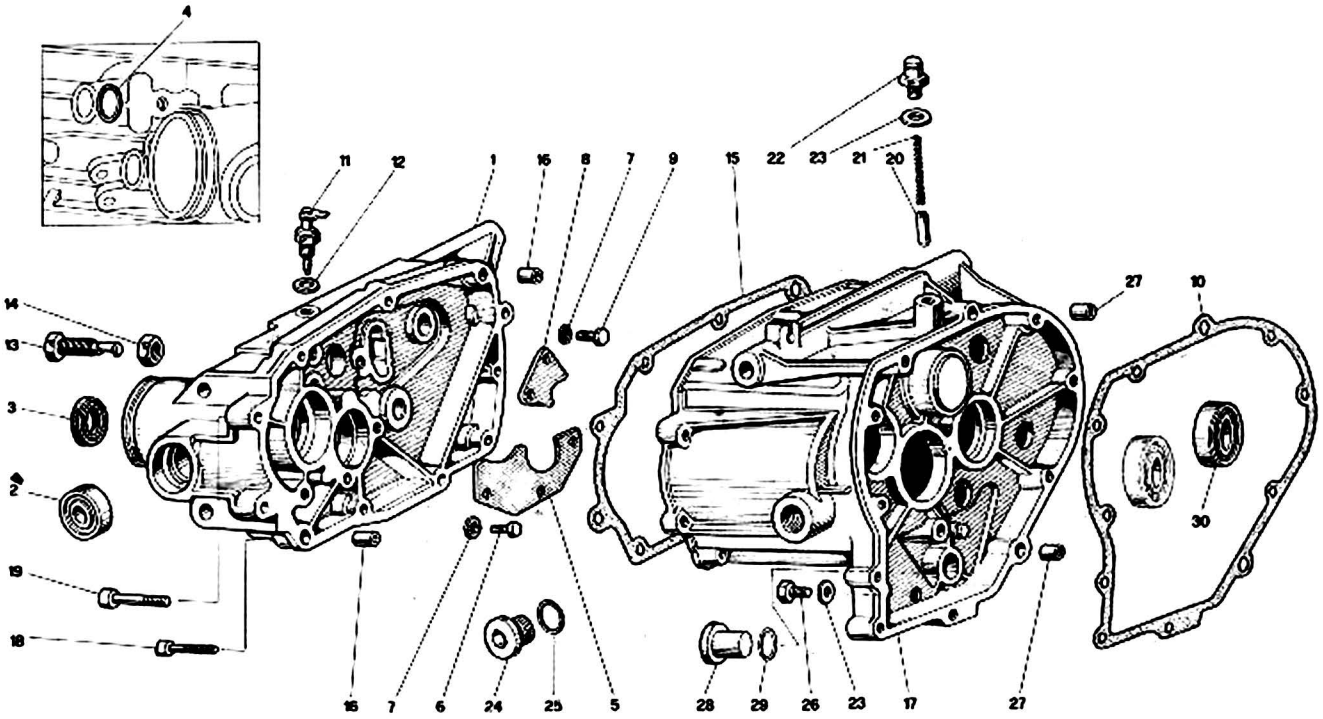

NOTE NOTES NOTES MARKE	POS. N.	N. COD. CODE No. Nr. CODE CODE Nr.	Q.tà Q.ty Q.té M.ge	DENOMINAZIONE	DESCRIPTION	DESIGNATION	BEZEICHNUNG
	1	19 20 08 00	1	Coperchio scatola	Transm. case cover	Couvercle du carter	Getriebedeckel
	2	92 20 42 15	2	Cuscinetto	Bearing	Roulement	Lager
	3	90 40 27 37	1	Anello di tenuta	Seal ring	Bague d'étanchéité	Dichtring
	4	90 70 61 40	1	Anello OR	Ring	Bague	Ring
	5	19 21 38 00	1	Piastra fiss. albero	Plate	Plaque	Platte
	6	98 05 43 14	3	Vite fiss. piastra	Screw	Vis	Schraube
	7	14 21 79 01	5	Rosetta di sicurezza	Washer	Rondelle	Unterlegscheibe
	8	19 23 58 00	1	Piastra fiss. albero	Plate	Plaque	Platte
	9	98 05 43 14	2	Vite	Screw	Vis	Schraube
	10	19 20 03 00	1	Guarnizione	Gasket	Joint	Dichtung
	11	19 20 72 00	1	Interruttore folle	Switch	Interrupteur	Schalter
	12	12 15 42 00	1	Guarnizione	Gasket	Joint	Dichtung
	13	19 23 78 00	1	Vite con eccentrico	Screw	Vis	Schraube
	14	92 60 25 12	1	Dado	Nut	Ecrou	Mutter
	15	19 20 11 00	1	Guarnizione	Gasket	Joint	Dichtung
	16	61 00 21 00	2	Bussola	Bush	Douille	Buchse
	17	19 20 02 00	1	Scatola cambio	Transmission case	Carter de boite à vit.	Getriebegehäuse
	18	98 62 03 30	7	Vite fiss. coperchio	Screw	Vis	Schraube
	19	98 62 04 35	4	Vite fiss. coperchio	Screw	Vis	Schraube
	20	55 23 47 00	1	Nottolino	Pawl	Rochet	Sperrklinke
	21	94 32 10 67	1	Molla	Spring	Ressort	Feder
	22	19 20 65 01	1	Tappo sfiato compl.	Vent plug, compl.	Bouchon d'évent	Entlüftungsstopfen
	23	10 52 89 00	2	Guarnizione	Gasket	Joint	Dichtung
	24	19 35 12 00	1	Tappo introd. olio	Oil filler cap	Bouchon de rempl. h.	Oleinfüllstutzen
	25	90 70 62 03	1	Guarnizione	Gasket	Joint	Dichtung
	26	95 98 02 12	1	Tappo scarico olio	Oil drain plug	Bouchon de vid. huile	Olablassschraube
	27	61 00 21 00	2	Boccola di riferimento	Bush	Douille	Buchse
	28	19 20 41 00	1	Tappo foro	Hole plug	Bouchon de trou	Lockstopfen
	29	90 40 18 32	1	Anello di tenuta	Seal ring	Bague d'étanchéité	Dichtring
	30	92 20 11 20	1	Cuscinetto	Bearing	Roulement	Lager
●	–	19 99 15 01	1	Cambio completo e campana	Transmission assy and housing	Boite à vitesses compl. et carter	Schaltgetriebe, kpl. und Gehäuse

Dati indicativi soggetti a modifiche senza impegno di preavviso · All data are subject to modification without notice Scanzoroscate (Bg)

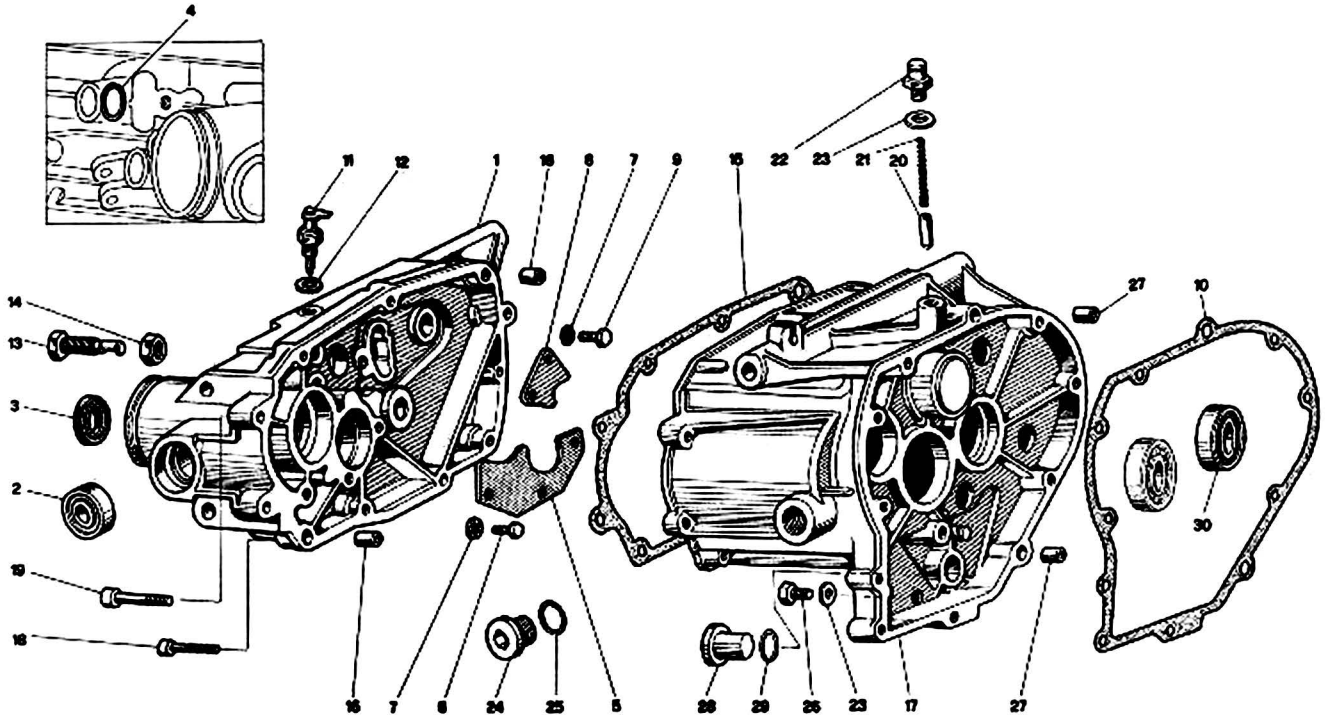

NOTE NOTES NOTES MARKE	POS. N.	N. COD. CODE No. Nr. CODE CODE Nr.	Q.tà Q.ty Q.té M.ge	DENOMINAZIONE	DESCRIPTION	DESIGNATION	BEZEICHNUNG
				● Varianti per modello V50 **Modifications for V50 model** **Variantes pour modèle V50** **Umänderungen für Modell V50**			
–		19 99 15 50	1	Cambio completo e campana	Transmission assy and housing	Boite à vitesses compl. et carter	Schaltgetriebe, kpl. und Gehäuse

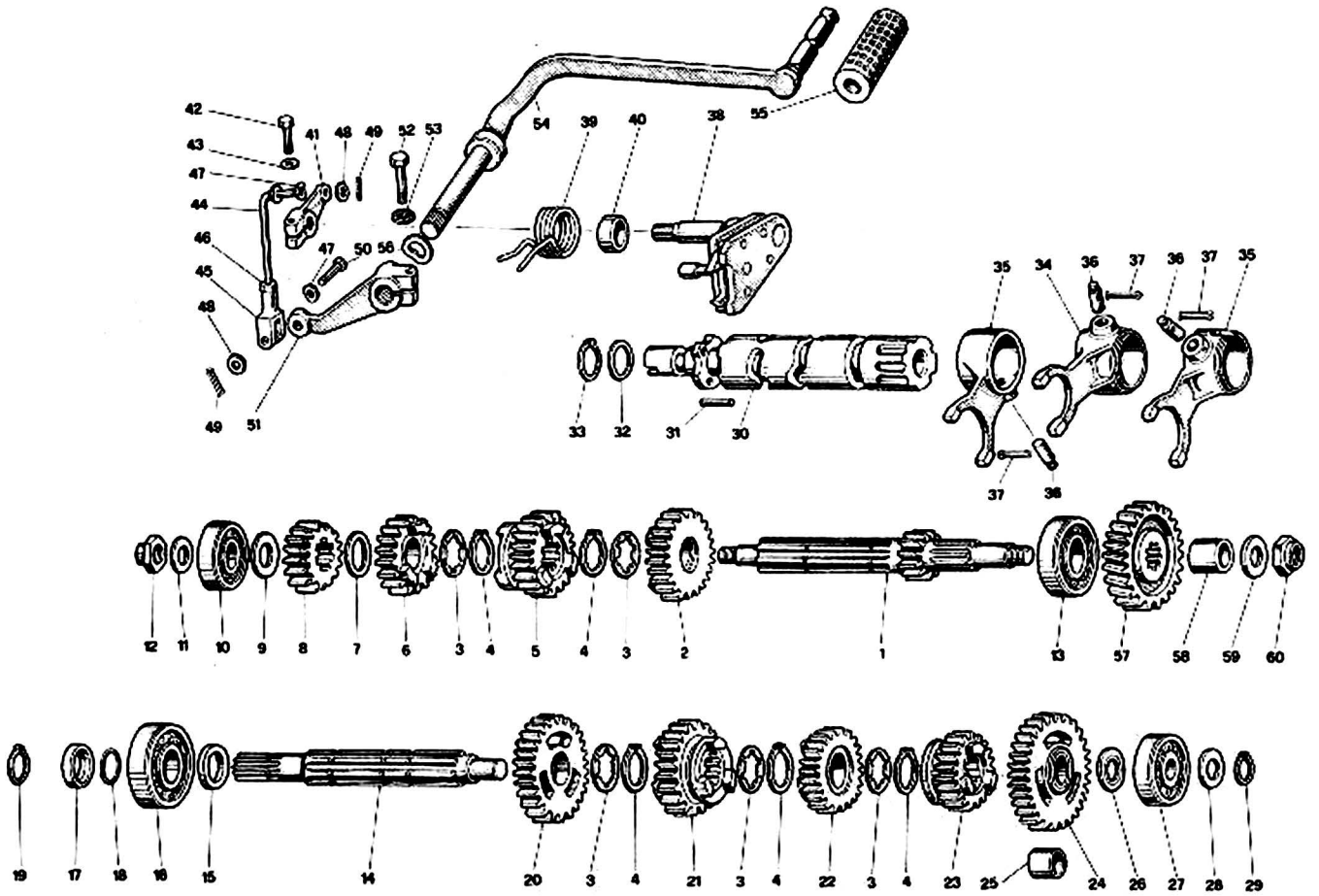

NOTE NOTES NOTES MARKE	POS. N.	N. COD. CODE No. Nr. CODE CODE Nr.	Q.tà Q.ty Q.té M.ge	DENOMINAZIONE	DESCRIPTION	DESIGNATION	BEZEICHNUNG
	1	19 21 05 01	1	Albero primario (Z = 11)	Main shaft (Z = 11)	Arbre primaire (Z = 11)	Antriebwelle (Z = 11)
	2	19 21 20 00	1	Ingranaggio 5a A.P. (Z = 22)	5th gear M.S. (Z = 22)	Pignon 5ème A.P. (Z = 22)	An.W. Schaltrad 5. Gang (Z = 22)
	3	39 21 54 00	5	Rosetta di rasamento	Washer	Rondelle	Unterlegscheibe
	4	90 27 11 23	5	Anello Seeger	Ring	Jonc d'arrêt	Seegerring
	5	19 21 18 00	1	Ingranaggio 4a A.P. (Z = 22)	4th gear M.S. (Z = 22)	Pignon 4ème A.P. (Z = 22)	An.W. Schaltrad. 4. Gang (Z = 22)
	6	19 21 14 00	1	Ingranaggio 3a A.P. (Z = 18)	3rd gear M.S. (Z = 18)	Pignon 3ème A.P. (Z = 18)	An.W. Schaltrad 3. Gang (Z = 18)
	7	19 21 46 00	1	Rosetta di rasamento	Washer	Rondelle	Unterlegscheibe
	8	19 21 13 00	1	Ingranaggio 2a A.P. (Z = 15)	2nd gear M.S. (Z = 15)	Pignon 2ème A.P. (Z = 15)	An.W. Schaltrad 2. Gang (Z = 15)
	9	43 07 09 40	1	Rosetta di spallamento	Washer	Rondelle	Unterlegscheibe
	10	92 20 14 15	1	Cuscinetto	Bearing	Roulement	Lager
	11	39 23 81 00	1	Rosetta di spallamento	Washer	Rondelle	Unterlegscheibe
	12	10 05 41 00	1	Dado	Nut	Ecrou	Mutter
	13	92 20 12 20	1	Cuscinetto	Bearing	Roulement	Lager
	14	19 21 36 00	1	Albero secondario	Layshaft	Arbre secondaire	Abtriebwelle
	15	19 21 29 00	1	Distanziale	Spacer	Entretoise	Distanzstück
	16	92 20 12 20	1	Cuscinetto	Bearing	Roulement	Lager
	17	19 21 37 00	1	Distanziale	Spacer	Entretoise	Distanzstück
	18	90 70 61 88	1	Anello OR	Ring	Bague	Ring
	19	90 27 11 21	1	Anello Seeger	Ring	Jonc d'arrêt	Seegerring
	20	19 21 45 00	1	Ingranaggio 2a A.S. (Z = 26)	2nd gear L.S. (Z = 26)	Pignon 2ème A.S. (Z = 26)	Ab.W. Schaltrad 2. Gang (Z = 26)
	21	19 21 48 00	1	Ingranaggio 3a A.S. (Z = 23)	3rd gear L.S. (Z = 23)	Pignon 3ème A.S. (Z = 23)	Ab.W. Schaltrad 3. Gang (Z = 23)
	22	19 21 51 00	1	Ingranaggio 4a A.S. (Z = 23)	4th gear L.S. (Z = 23)	Pignon 4ème A.S. (Z = 23)	Ab.W. Schaltrad 4. Gang (Z = 23)
	23	19 21 52 00	1	Ingranaggio 5a A.S. (Z = 20)	5th gear L.S. (Z = 20)	Pignon 5ème A.S. (Z = 20)	Ab.W. Schaltrad 5. Gang (Z = 20)
	24	19 21 40 00	1	Ingranaggio 1a A.S. (Z = 30)	1st gear L.S. (Z = 30)	Pignon 1ère A.S. (Z = 30)	Ab.W. Schaltrad 1. Gang (Z = 30)
	25	19 21 41 00	1	Boccola	Bush	Douille	Buchse
	26	43 07 09 40	1	Rosetta di spallamento	Washer	Rondelle	Unterlegscheibe
	27	92 20 14 15	1	Cuscinetto	Bearing	Roulement	Lager
	28	39 23 93 00	1	Rosetta di spallamento	Washer	Rondelle	Unterlegscheibe

Seimm Moto Guzzi - 22054 Mandello del Lario (Co) Tel. 731112 - 732512 - Tx: 38095 - 6/77 - 2500 K Printed in Italy

Dati indicativi soggetti a modifiche senza impegno di preavviso All data are subject to modification without notice Scanzorosciate (Bg)

V35-V50	CAMBIO TRANSMISSION BOITE A VITESSES SCHALTGETRIEBE		SEIMM MOTO GUZZI
Tavola - Drawing Table - Bild **9**			

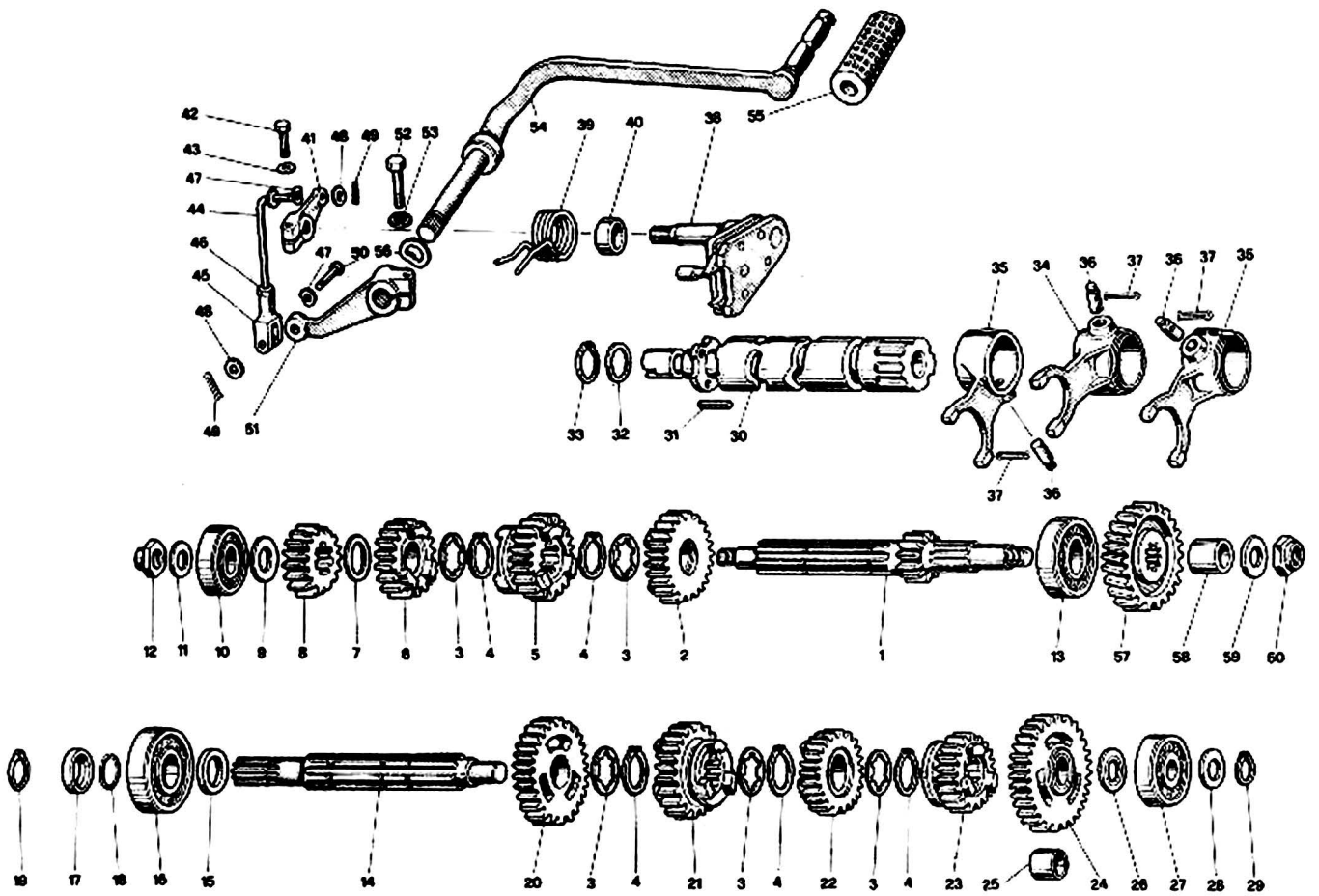

NOTE NOTES NOTES MARKE	POS. N.	N. COD. CODE No. Nr. CODE CODE Nr.	Q.tà Q.ty Q.té M.ge	DENOMINAZIONE	DESCRIPTION	DESIGNATION	BEZEICHNUNG
	29	90 27 11 15	1	Anello Seeger	Ring	Bague	Seegerring
	30	19 23 44 00	1	Albero desmodromico	Splined shaft	Arbre desmodrom.	Keilwelle
	31	19 23 46 00	4	Pioli	Pin	Goupille	Stift
	32	19 35 53 00	1	Rosetta di spallamento	Washer	Rondelle	Unterlegscheibe
	33	90 27 10 20	1	Anello Seeger	Ring	Bague	Seegerring
	34	39 23 12 70	1	Forcellino per A.P.	M.S. fork	Axe de fourc. A.P.	An.W. Schaltgabel
	35	39 23 10 70	2	Forcellino per A.S.	L.S. fork	Axe de fourc. A.S.	Ab.W. Schaltgabel
	36	39 23 52 00	3	Rullo	Roller	Rouleau	Walze
	37	95 40 13 20	3	Copiglia	Cotter pin	Goupille	Splint
	38	19 23 62 00	1	Preselettore compl.	Preselection, compl.	Présélecteur compl.	Vorwahl, kpl.
	39	61 23 82 00	1	Molla	Spring	Ressort	Feder
	40	91 18 20 10	1	Boccola	Bush	Douille	Buchse
	41	19 25 82 00	1	Leva com. preselettore	Lever	Levier	Hebel
	42	98 05 23 25	1	Vite	Screw	Vis	Schraube
	43	95 02 11 06	1	Rosetta	Washer	Rondelle	Unterlegscheibe
	44	19 25 78 00	1	Tirante	Rod	Tige	Schaltstange
	45	12 62 68 00	1	Forcellino	Fork	Fourchette	Gabel
	46	92 60 22 06	1	Dado	Nut	Ecrou	Mutter
	47	95 12 91 10	2	Ranella antivibrante	Washer	Rondelle	Unterlegscheibe
	48	95 00 42 06	1	Ranella piana	Washer	Rondelle	Unterlegscheibe
	49	95 50 02 22	2	Copiglia	Cotter pin	Goupille	Splint
	50	95 78 02 65	1	Spina per forcellino	Pin	Axe	Stift
	51	19 25 69 00	1	Leva di rinvio	Lever	Levier	Hebel
	52	98 05 23 25	1	Vite	Screw	Vis	Schraube
	53	95 02 11 06	1	Ranella	Washer	Rondelle	Unterlegscheibe
	54	19 25 09 00	1	Leva cambio	Transmission lever	Levier de boite à vit.	Schalthebel
	55	14 25 10 01	1	Pedalino gomma	Rubber protection	Couvre-pédale	Gummiüberzug
	56	95 12 92 60	1	Ranella elastica	Spring washer	Rondelle élastique	Federscheibe
●	57	19 21 11 01	1	Ingranaggio rinvio A.P. (Z = 24)	Idle gear M.S. (Z = 24)	Pignon intermédiaire A.P. (Z = 24)	Zahnradvorgelege An.W. (Z = 24)
	58	19 26 67 00	1	Boccola	Bush	Douille	Buchse
	59	39 23 81 00	1	Rosetta di spallamento	Washer	Rondelle	Unterlegscheibe
	60	10 05 41 00	1	Dado	Nut	Ecrou	Mutter

Seimm Moto Guzzi - 22054 Mandello del Lario (Co) Tel. 731112 - 732512 - Tx: 38095 - 6/77 - 2500 K Printed in Italy

Dati indicativi soggetti a modifiche senza impegno di preavviso - All data are subject to modification without notice Scanzorosciate (Bg)

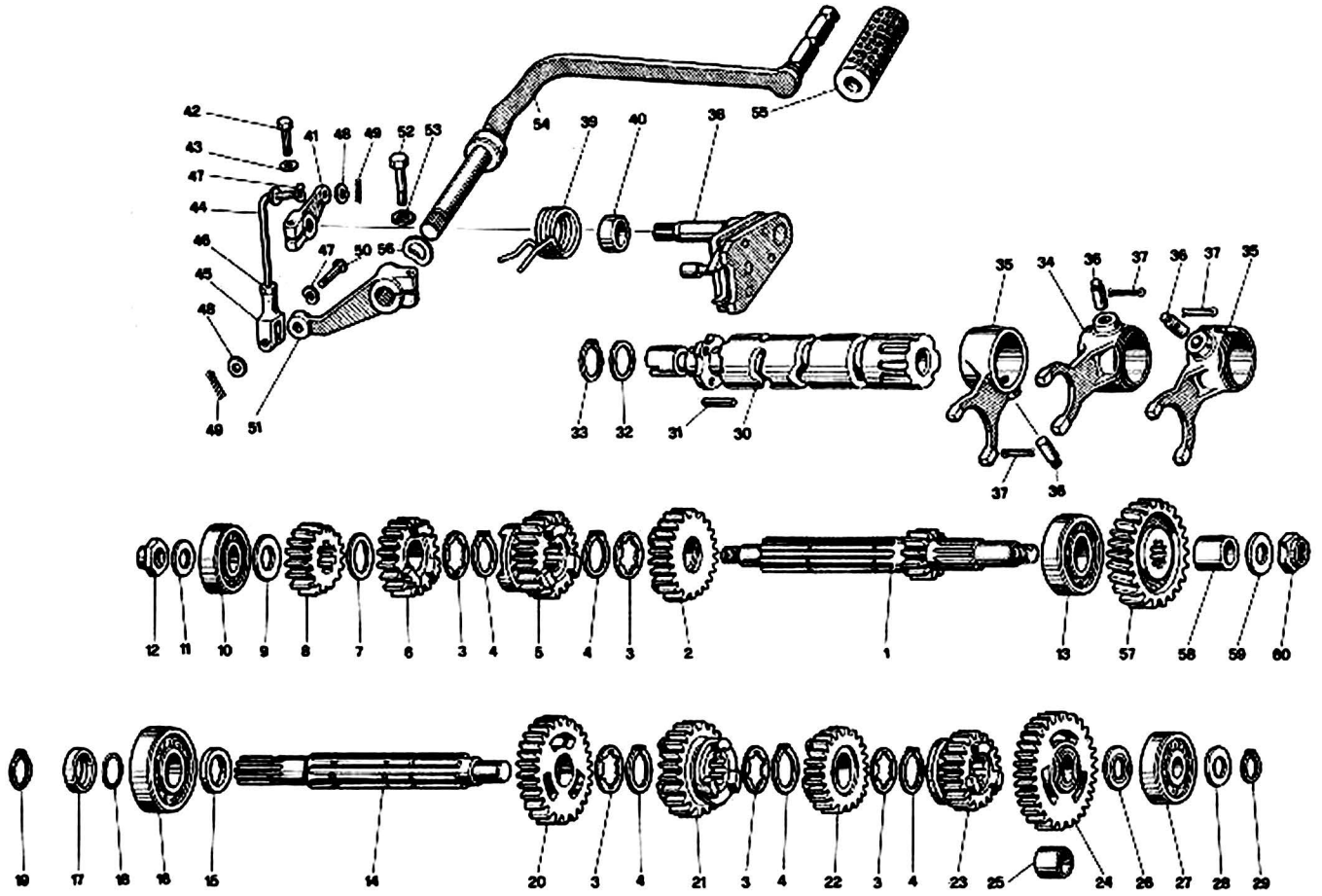

NOTE NOTES NOTES MARKE	POS. N.	N. COD. CODE No. Nr. CODE CODE Nr.	Q.tà Q.ty Q.té M.ge	DENOMINAZIONE	DESCRIPTION	DESIGNATION	BEZEICHNUNG
				● Varianti per modello V50 **Modifications for V50 model** **Variantes pour modèle V50** **Umänderungen für Modell V50**			
57		19 21 11 51	1	Ingranaggio rinvio A.P. (Z = 23)	Idle gear M.S. (Z = 23)	Pignon intermédiaire A.P. (Z = 23)	Zahnradvorgelege An.W. (Z = 23)

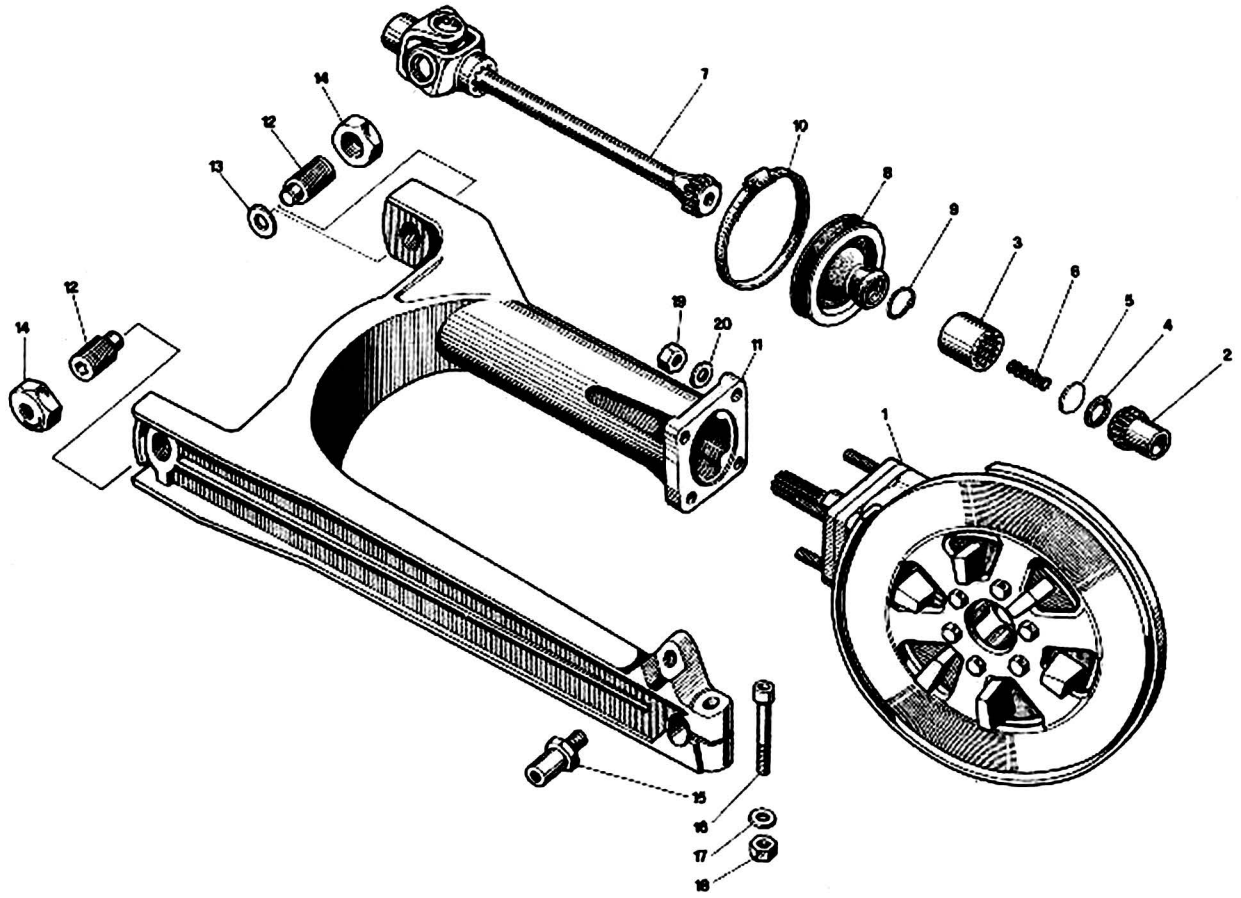

NOTE NOTES NOTES MARKE	POS. N.	N. COD. CODE No. Nr. CODE CODE Nr.	Q.tà Q.ty Q.tè M.ge	DENOMINAZIONE	DESCRIPTION	DESIGNATION	BEZEICHNUNG
	1	19 35 02 00	1	Scatola trasmiss. com.	Transmission compl.	Carter de transmission	K.übertragungsgehäuse
	2	19 32 77 01	1	Manicotto	Sleeve	Manchon	Manschette
	3	19 32 88 01	1	Manicotto collag.	Sleeve	Manchon	Manschette
	4	90 27 20 23	1	Anello Seeger	Circlip	Jonc d'arrêt	Seegerring
	5	19 32 76 01	1	Dischetto	Disc	Disque	Platte
	6	94 32 10 99	1	Molla	Spring	Ressort	Feder
	7	19 32 80 01	1	Giunto cardanico	Joint	Joint	Verbindung
	8	19 54 80 01	1	Soffietto di protezione	Bellows	Soufflet	Faltenbag
	9	19 54 81 01	1	Molla	Spring	Ressort	Feder
	10	12 54 82 01	1	Fascetta	Clamp	Collier	Schelle
	11	19 54 02 00	1	Forcellone oscillante	Rear fork	Fourche AR	Hintergabel
	12	19 54 70 00	2	Perno	Pin	Goujon	Stift
	13	35 21 43 00	1	Rondella di spessore	Washer	Rondelle	Unterlegscheibe
	14	14 54 78 00	2	Dado	Nut	Ecrou	Mutter
	15	19 55 52 00	1	Perno fiss. sospens.	Pin	Goujon	Stift
	16	98 05 25 50	1	Vite	Screw	Vis	Schraube
	17	95 00 42 10	1	Ranella	Washer	Rondelle	Unterlegscheibe
	18	92 60 22 10	1	Dado	Nut	Ecrou	Mutter
	19	92 78 10 81	4	Dado cieco	Nut	Ecrou borgnel	Mutter
	20	95 00 42 08	4	Ranella	Washer	Rondelle	Unterlegscheibe

Dati indicativi soggetti a modifiche senza impegno di preavviso All data are subject to modification without notice Scanzorosciate (Bg)

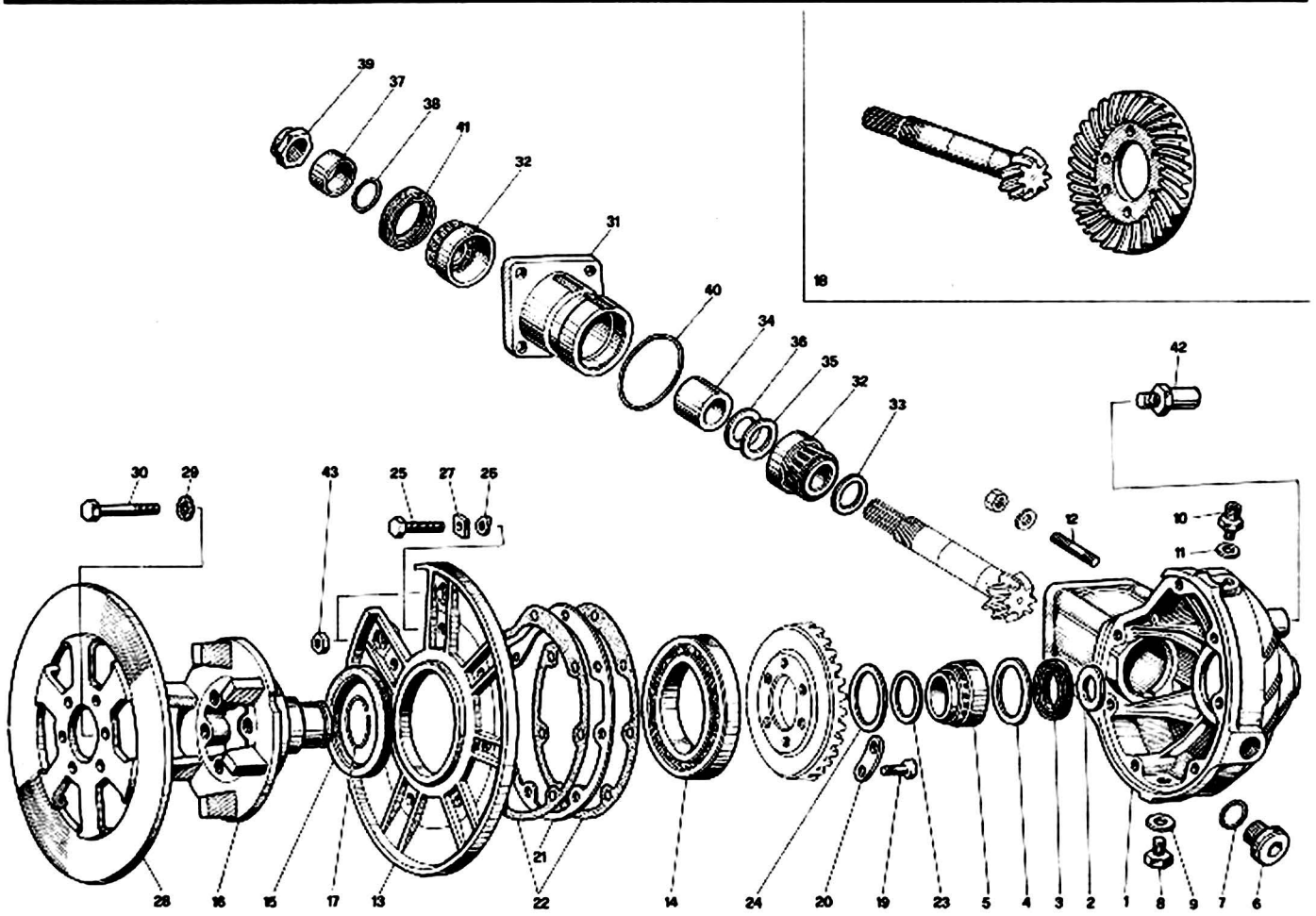

NOTE NOTES NOTES MARKE	POS. N.	N. COD. CODE No. Nr. CODE CODE Nr.	Q.tà Q.ty Q.tè M.ge	DENOMINAZIONE	DESCRIPTION	DESIGNATION	BEZEICHNUNG
	1	19 35 03 00	1	Scatola trasm. nuda	Transm. housing	Carter de transmission	K.übertragungsgehäuse
	2	19 35 19 00	1	Rondella di spallam.	Washer	Rondelle	Unterlegscheibe
	3	90 40 35 47	1	Anello di tenuta	Seal ring	Bague d'étanchéité	Dichtring
	4	19 35 11 00	1	Rondella di spallam.	Washer	Rondelle	Unterlegscheibe
	5	92 25 22 35	1	Cuscinetto a rulli	Roller bearing	Roulement à rouleaux	Rollenlager
	6	19 35 12 00	1	Tappo livello olio	Oil level plug	Bouchon d'huile	Ölstandpfopfen
	7	90 70 62 03	1	Guarnizione	Gasket	Joint	Dichtung
	8	95 98 02 12	1	Tappo scarico olio	Oil drain plug	Bouchon de vid. huile	Öleblassschraube
	9	10 52 89 00	1	Rondella alluminio	Washer	Rondelle	Unterlegscheibe
	10	19 20 65 01	1	Tappo sfiato compl.	Breather	Reniflard	Entluftungsschlauch
	11	10 52 89 00	1	Guarnizione	Gasket	Joint	Dichtung
	12	96 50 80 45	4	Prigionieri	Stud bolt	Goujon	Stiftschraube
	13	19 35 04 01	1	Coperchio	Cover	Couvercle	Deckel
	14	92 20 10 70	1	Cuscinetto a sfere	Ball bearing	Roulement à billes	Kugellager
	15	90 40 75 90	1	Anello di tenuta	Seal ring	Bague d'étanchéité	Dichtring
	16	19 35 14 01	1	Perno	Pin	Goujon	Stift
	17	90 35 30 30	1	Anello di fermo	Stop ring	Bague d'arrêt	Sperring
	18	19 35 46 01	1	Coppia conica (Z = 8/31)	Bevel gear (Z = 8/31)	Couple conique (Z = 8/31)	Tellerradsatz (Z = 8/31)
	19	12 06 77 01	6	Vite fiss. corona	Screw	Vis	Schraube
	20	12 35 64 00	3	Piastrina di sicurezza	Lock plate	Plaquette frein	Schliessblech
	21	19 35 54 00	1	Spessore di regolazione mm 0,8	Shim mm 0.8	Cale d'épaisseur mm 0,8	Ausgleichscheibe mm 0,8
	21	19 35 54 02	1	Spessore di regolazione mm 0,9	Shim mm 0.9	Cale d'épaisseur mm 0,9	Ausgleichscheibe mm 0,9
	21	19 35 54 04	1	Spessore di regolazione mm 1	Shim mm 1	Cale d'épaisseur mm 1	Ausgleichscheibe mm 1
	21	19 35 54 06	1	Spessore di regolazione mm 1,1	Shim mm 1.1	Cale d'épaisseur mm 1,1	Ausgleichscheibe mm 1,1
	21	19 35 54 08	1	Spessore di regolazione mm 1,2	Shim mm 1.2	Cale d'épaisseur mm 1,2	Ausgleichscheibe mm 1,2
	21	19 35 54 10	1	Spessore di regolazione mm 1,3	Shim mm 1.3	Cale d'épaisseur mm 1,3	Ausgleichscheibe mm 1,3
	22	19 35 07 00	2	Guarnizione	Gasket	Joint	Dichtung
	23	19 35 23 00	1	Rondella di rasam.	Washer	Rondelle	Unterlegscheibe
	24	19 35 35 00	1	Rondella di rasam.	Washer	Rondelle	Unterlegscheibe
	25	98 05 44 25	7	Vite fiss. coperchio	Screw	Vis	Schraube

Dati indicativi soggetti a modifiche senza impegno di preavviso - All data are subject to modification without notice

Scanzorosciate (Bg)

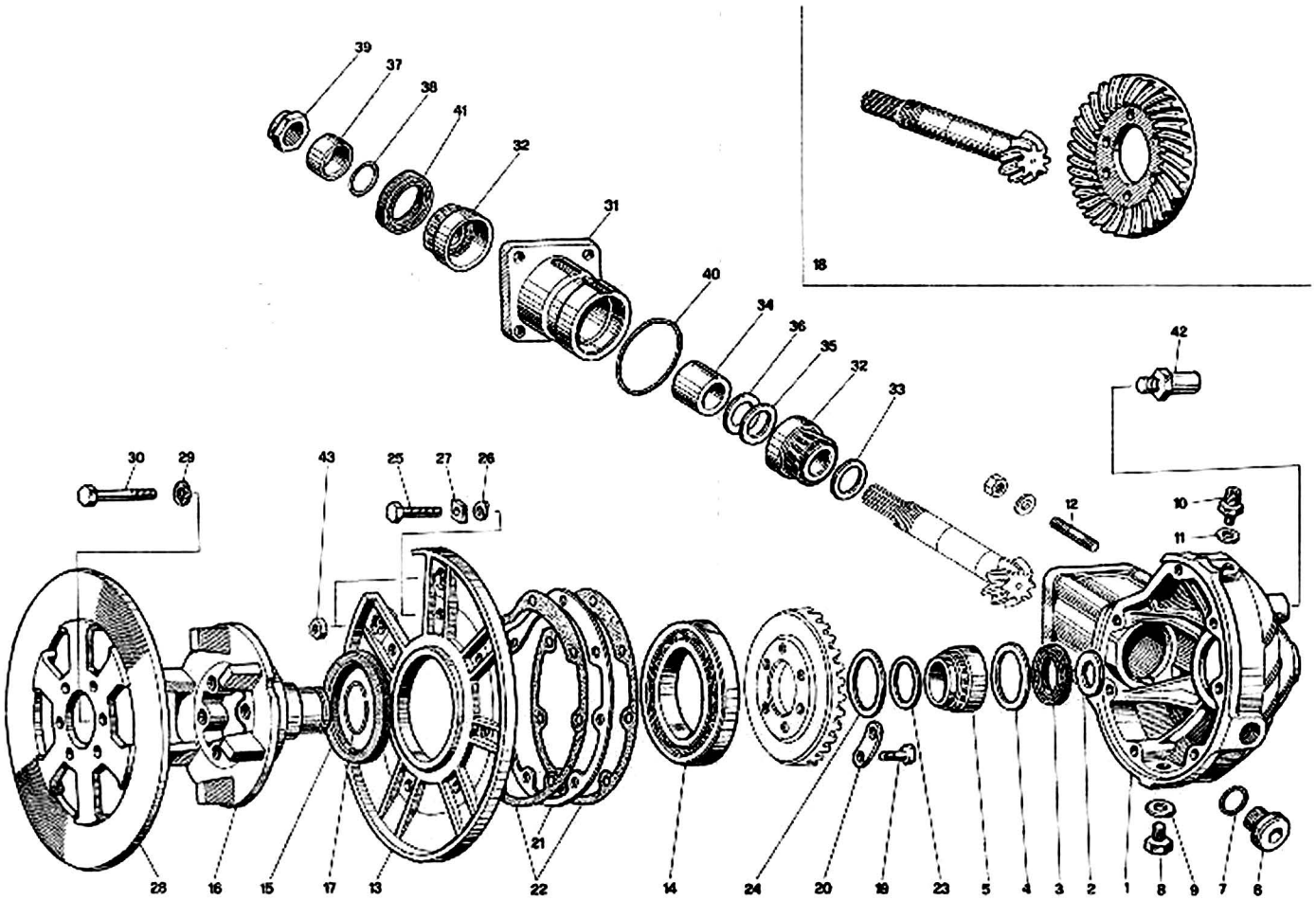

NOTE NOTES NOTES MARKE	POS. N.	N. COD. CODE No. Nr. CODE CODE Nr.	Q.tà Q.ty Q.té M.ge	DENOMINAZIONE	DESCRIPTION	DESIGNATION	BEZEICHNUNG
	26	61 27 03 00	7	Rosetta elast. ond.	Washer	Rondelle	Unterlegscheibe
	27	95 18 70 08	7	Piastrina di sicurezza	Lock plate	Plaquette frein	Schliessblech
	28	19 63 57 00	1	Disco freno poster.	Rear brake disc	Disque frein AR	Hint. Bremsescheibe
	29	14 61 59 01	6	Rondella di sicurezza	Washer	Rondelle	Unterlegscheiba
	30	98 05 44 18	6	Vite fiss. disco	Screw	Vis	Schraube
	31	19 35 24 01	1	Custodia	Flange	Flasque	Flansch
	32	92 24 92 20	2	Cuscinetto a rulli	Roller bearing	Roulement à rouleaux	Rollenlager
	33	19 35 53 00	1-2	Spessore per pignone mm 1	Pinion shim mm 1	Cale d'épaisseur mm 1	Ausgleichscheibe mm 1
	33	19 35 53 02	1-2	Spessore per pignone mm 1,2	Pinion shim mm 1.2	Cale d'épaisseur mm 1,2	Ausgleichscheibe mm 1,2
	33	19 35 53 05	1-2	Spessore per pignone mm 1,5	Pinion shim mm 1.5	Cale d'épaisseur mm 1,5	Ausgleichscheibe mm 1,5
	34	19 35 51 00	1	Distanziale	Spacer	Entretoise	Distanzstück
	35	19 35 52 00	1-2	Rosetta regolazione mm 0,1	Shim mm 0.1	Rondelle d'ajustement mm 0,1	Passscheibe mm 0,1
	36	19 35 52 02	1-11	Rosetta regolazione mm 0,15	Shim mm 0,15	Rondelle d'ajustement mm 0,15	Passscheibe mm 0,15
	37	19 35 68 01	1	Distanziale	Spacer	Entretoise	Distanzstück
	38	90 70 61 88	1	Anello di tenuta	Seal ring	Bague d'étanchéité	Dichtring
	39	19 35 67 00	1	Dado bloccaggio	Nut	Ecrou	Mutter
	40	90 70 65 52	1	Guarnizione	Gasket	Joint	Dichtung
	41	90 40 32 47	1	Anello di tenuta	Seal ring	Bague d'étanchéité	Dichtring
	42	19 55 52 00	1	Perno fiss. sospens.	Pin	Goujon	Stift
	43	92 60 22 08	2	Dado	Nut	Ecrou	Mutter

SEIMM MOTO GUZZI

TELAIO
FRAME
CHASSIS
RAHMEN

V35-V50

Tavola - Drawing
Table - Bild **12**

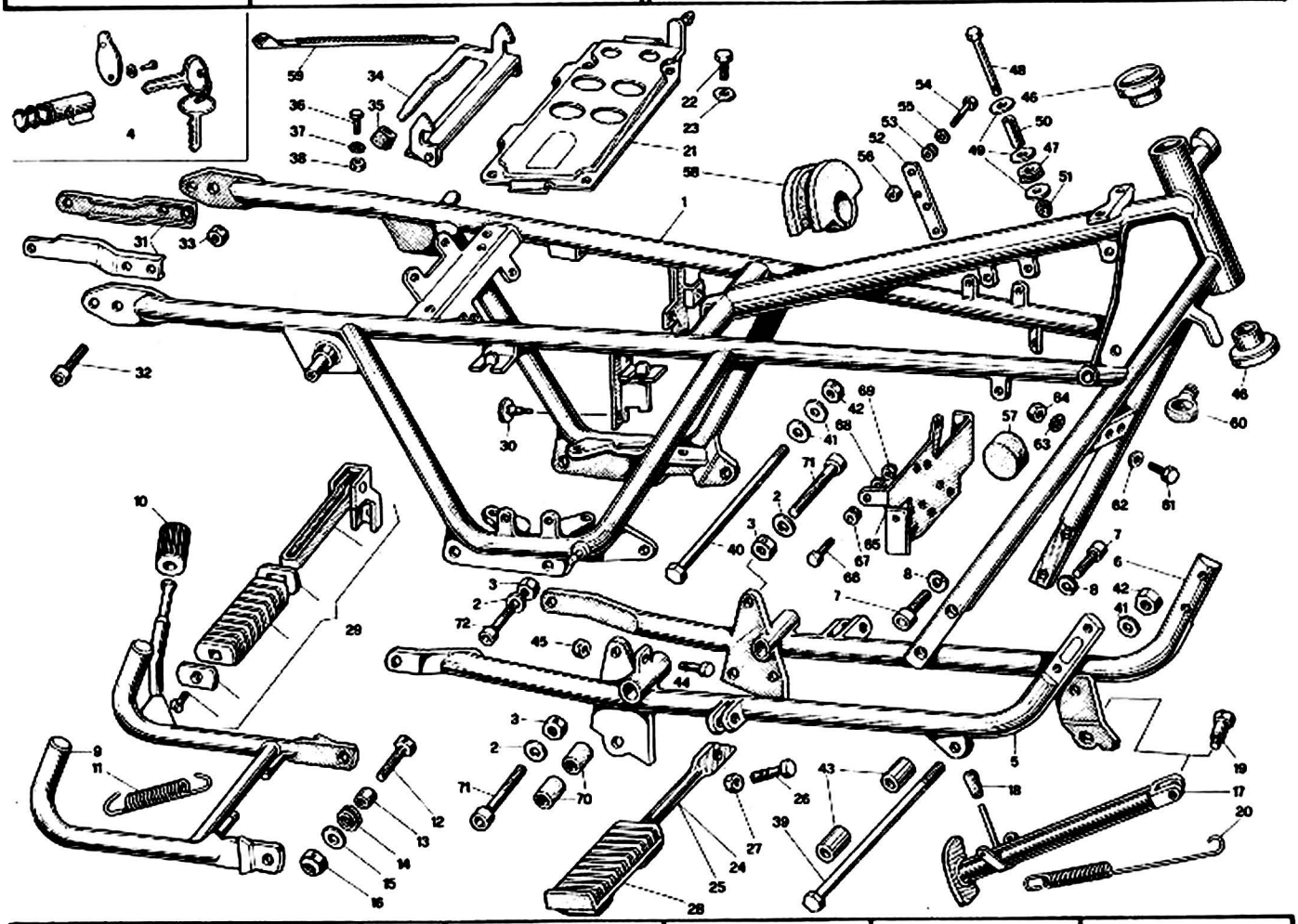

NOTE NOTES NOTES MARKE	POS. N.	N. COD. CODE No. Nr. CODE CODE Nr.	Q.tà Q.ty Q.té M.ge	DENOMINAZIONE	DESCRIPTION	DESIGNATION	BEZEICHNUNG
	1	19 40 01 00	1	Telaio completo	Frame, assy	Châssis complet	Rahmen, kpl.
	2	95 00 42 10	4	Rondella	Washer	Rondelle	Unterlegscheibe
	3	92 60 22 10	4	Dado	Nut	Ecrou	Mutter
	4	39 78 25 00	1	Corpo antifurto	Steering lock	Serrure de direction	Lenkschloss
	5	19 42 03 00	1	Braccio culla destro	R.H. arm	Bras D	Arm R.
	6	19 42 21 00	1	Braccio culla sinistro	L.H. arm	Bras G	Arm L.
	7	98 62 25 22	4	Vite	Screw	Vis	Schraube
	8	95 12 01 05	4	Rondella elastica	Spring washer	Rondelle élastique	Federscheibe
	9	19 43 03 00	1	Cavalletto	Stand	Bequille	Ständer
	10	13 43 26 40	1	Pedalino in gomma	Foot rest rubber	Caoutch. de rep.-pieds	Fussrastegummi
	11	12 43 40 01	2	Molla	Spring	Ressort	Feder
	12	98 05 45 30	2	Vite	Screw	Vis	Schraube
	13	91 18 11 11	2	Distanziale	Spacer	Entretoise	Distanzstück
	14	94 32 22 15	1	Molla	Spring	Ressort	Feder
	15	95 00 02 10	2	Ranella	Washer	Rondelle	Unterlegscheibe
	16	92 63 05 10	2	Dado	Nut	Ecrou	Mutter
	17	19 43 20 00	1	Puntone laterale	Side bar	Tirant latéral	Seitenstange
	18	19 43 30 00	1	Gommino	Rubber block	Caoutchouc	Gummistück
	19	99 10 51 29	1	Perno	Pin	Goujon	Stift
	20	19 43 40 00	2	Molla	Spring	Ressort	Feder
	21	19 41 82 00	1	Piastra porta batteria	Plate	Plaque	Platte
	22	98 05 44 18	4	Vite	Screw	Vis	Schraube
	23	95 00 42 08	4	Rosetta piana	Washer	Rondelle	Unterlegscheibe
	24	39 44 07 00	1	Tubo dx. portapedana	R.H. pipe	Tuyau D	Rohr, R.
	25	39 44 18 00	1	Tubo sx. portapedana	L.H. pipe	Tuyau G	Rohr, L.
	26	98 82 04 30	2	Vite	Screw	Vis	Schraube
	27	92 60 22 08	2	Dado	Nut	Ecrou	Mutter
	28	39 44 32 00	2	Pedana appoggiapiedi	Foot rest	Repose-pieds	Fussraste
	29	61 44 23 00	2	Pedana appoggiap. pos.	Rear foot rest	Repose-pieds AR	Hint. Fussraste
	30	19 70 59 00	4	Tappo	Plug	Bouchon	Stopfen
	31	19 43 91 00	2	Supporto paraf. post.	Rear fender bracket	Support d'aile AR	Hint. Kotflügelstütze
●	32	98 82 24 18	4	Vite	Screw	Vis	Schraube
	33	92 63 05 08	4	Dado autobloccante	Self-locking nut	Ecrou à autoblocage	Selbstklemmutter
	34	19 46 20 50	1	Arpione blocc. sella	Pawl	Rochet	Sperrklinke
	35	61 46 28 00	1	Gommino	Rubber block	Caoutchouc	Gummistück
	36	98 05 43 12	2	Vite	Screw	Vis	Schraube

Seimm Moto Guzzi - 22054 Mandello del Lario (Co) - Tel. 731112 - 732512 - Tx: 38095 - 6/77 - 2500 K Printed in Italy

Dati indicativi soggetti a modifiche senza impegno di preavviso All data are subject to modification without notice

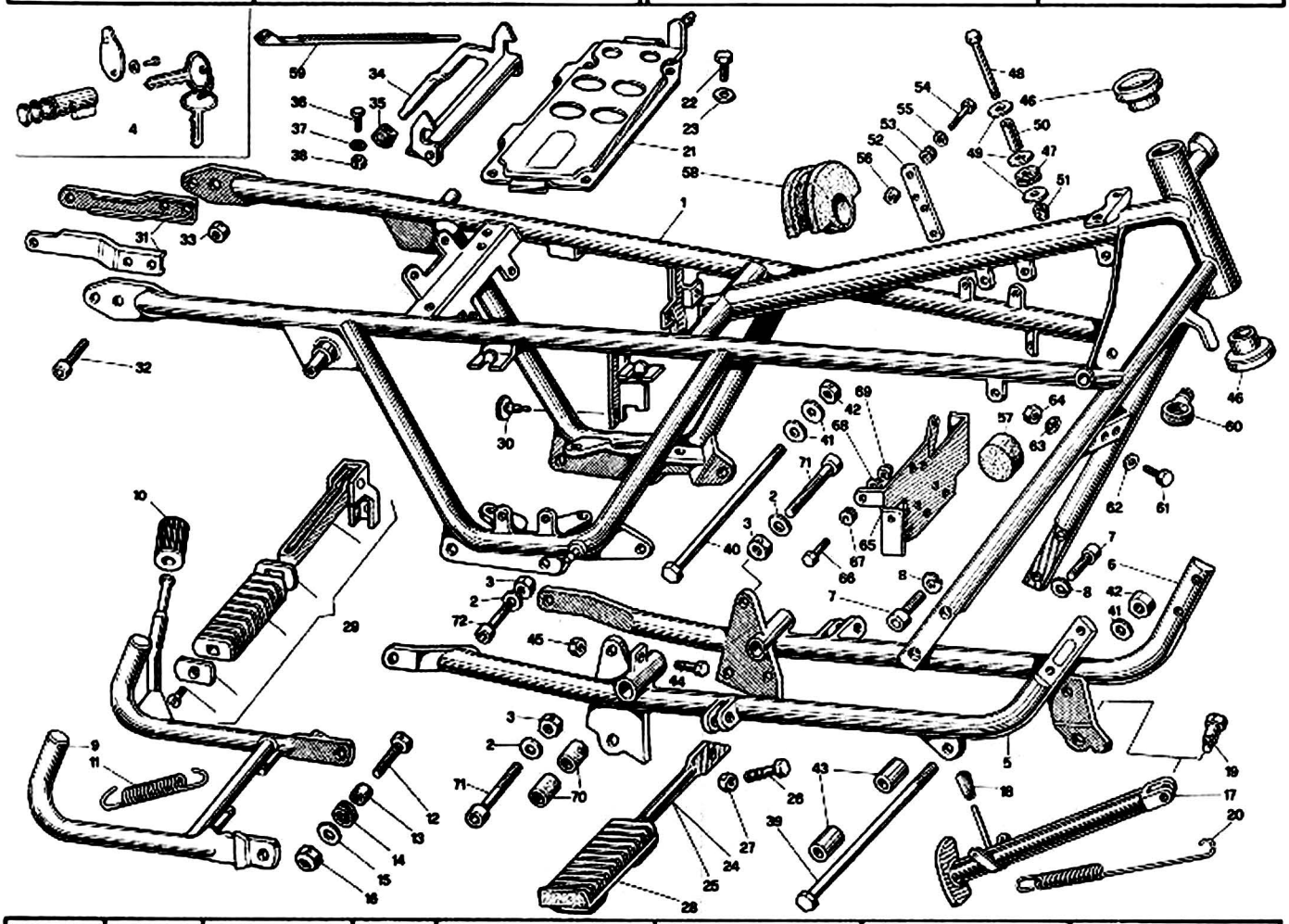

NOTE NOTES NOTES MARKE	POS. N.	N. COD. CODE No. Nr. CODE CODE Nr.	Q.tà Q.ty Q.tè M.ge	DENOMINAZIONE	DESCRIPTION	DESIGNATION	BEZEICHNUNG
	37	95 02 11 06	2	Rondella elastica	Spring washer	Rondelle élastique	Federscheibe
	38	92 60 22 06	2	Dado	Nut	Ecrou	Mutter
	39	53 42 95 00	1	Tirante lungo	Long rod	Tirant long	Lange Zugstange
	40	98 11 01 99	1	Tirante corto	Short rod	Tirant court	Kurze Zugstange
	41	95 00 42 10	3	Rondella	Washer	Rondelle	Unterlegscheibe
	42	92 60 22 10	2	Dado	Nut	Ecrou	Mutter
	43	19 01 70 00	2	Boccola	Bush	Douille	Buchse
	44	98 05 43 22	1	Vite di registro	Adjusting screw	Vis de réglage	Einstellschraube
	45	92 60 22 06	1	Dado	Nut	Ecrou	Mutter
	46	39 51 50 00	2	Calotta	Cap	Couvercle	Deckel
	47	91 55 10 85	2	Gommino	Rubber block	Caoutchouc	Gummistück
	48	98 05 23 50	2	Vite	Screw	Vis	Schraube
	49	95 10 01 39	8	Rondella	Washer	Rondelle	Unterlegscheibe
	50	91 18 07 25	2	Distanziale	Spacer	Entretoise	Distanzstück
	51	92 63 01 06	2	Dado	Nut	Ecrou	Mutter
	52	19 71 68 01	2	Piastra attacco bobina	Plate	Plaque	Platte
	53	91 55 10 85	2	Gommino	Rubber block	Caoutchouc	Gummistück
	54	98 05 22 20	2	Vite	Screw	Vis	Schraube
	55	95 10 00 59	2	Rondella	Washer	Rondelle	Unterlegscheibe
	56	92 63 01 05	2	Dado in nylon	Nylon nut	Ecrou en nylon	Nylonmutter
	57	39 10 34 00	2	Gommino	Rubber block	Caoutchouc	Gummistück
	58	14 10 71 00	1	Tampone centrale	Rubber buffer	Tampon de caoutch.	Gummipuffer
	59	14 60 96 50	1	Fascetta	Clamp	Collier	Schelle
	60	19 43 65 00	2	Occhiello	Screw eye	Oeillet	Anschlussöse
	61	98 82 24 20	1	Vite	Screw	Vis	Schraube
	62	95 00 02 08	1	Rondella piana	Washer	Rondelle	Unterlegscheibe
	63	95 02 11 08	1	Rondella elast. ondul.	Spring washer	Rondelle élastique	Federscheibe
	64	92 60 22 08	1	Dado	Nut	Ecrou	Mutter
	65	19 70 41 00	1	Piastra fiss. raddr.	Plate	Plaque	Platte
	66	98 05 22 20	2	Vite	Screw	Vis	Schraube
	67	91 55 10 85	2	Gommino	Rubber block	Caoutchouc	Gummistück
	68	95 10 00 59	2	Rondella piana	Washer	Rondelle	Unterlegscheibe
	69	92 63 01 05	2	Dado in nylon	Nylon nut	Ecrou en nylon	Nylonmutter
	70	18 25 20 50	4	Boccola	Bush	Douille	Buchse
	71	98 05 25 65	2	Vite lunga	Long screw	Vis longue	Lange Schraube
	72	98 05 25 55	2	Vite corta	Short screw	Vis courte	Kurze Schraube

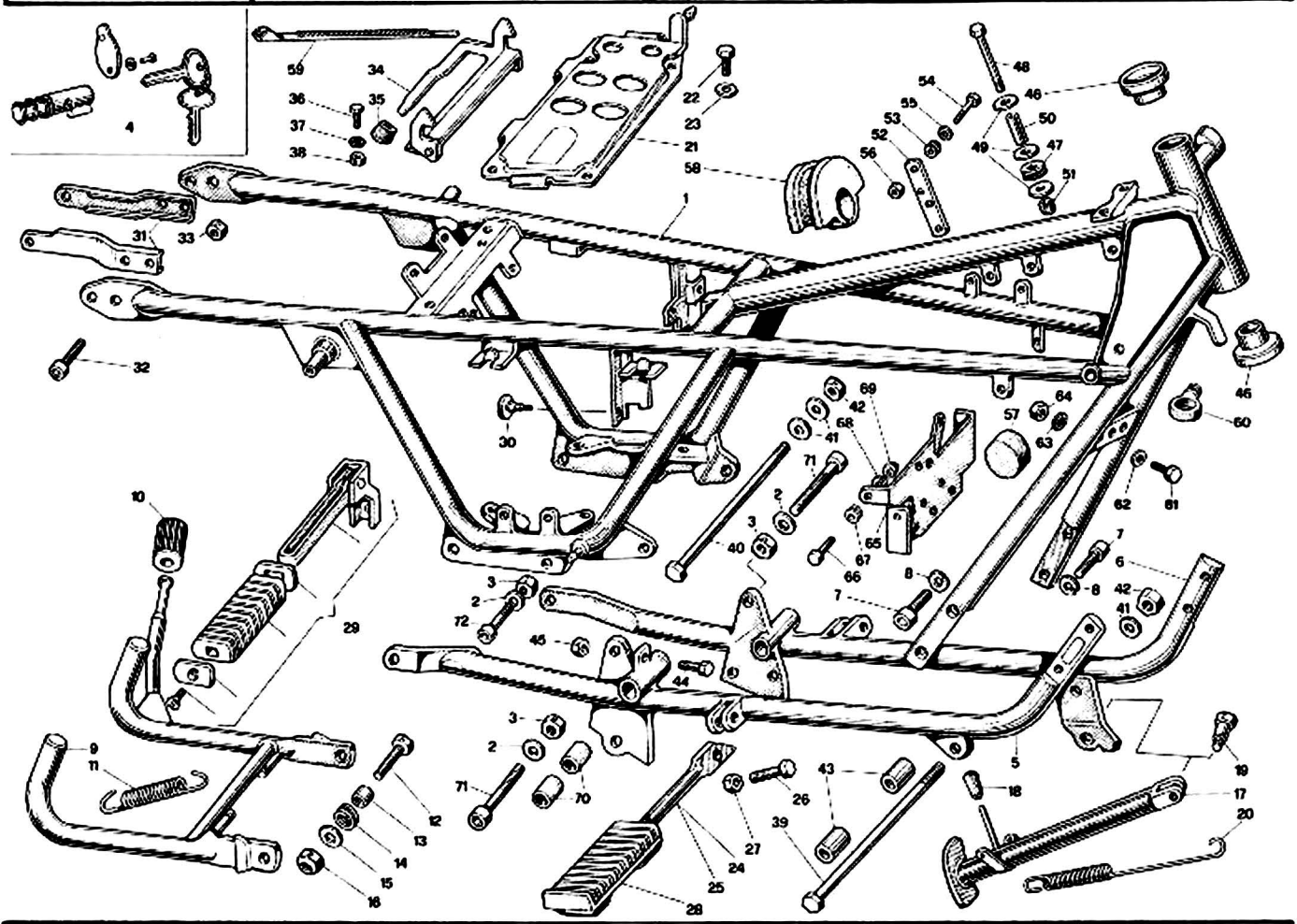

NOTE NOTES NOTES MARKE	POS. N.	N. COD. CODE No. Nr. CODE CODE Nr.	Q.tà Q.ty Q.tè M.ge	DENOMINAZIONE	DESCRIPTION	DESIGNATION	BEZEICHNUNG

● **Varianti per modello V50**
Modifications for V50 model
Variantes pour modèle V50
Umänderungen für Modell V50

32	98 82 24 18	2	Vite fiss. supp.	Screw	Vis	Schraube
32	98 82 24 20	2	Vite fiss. supp. e man.	Screw	Vis	Schraube

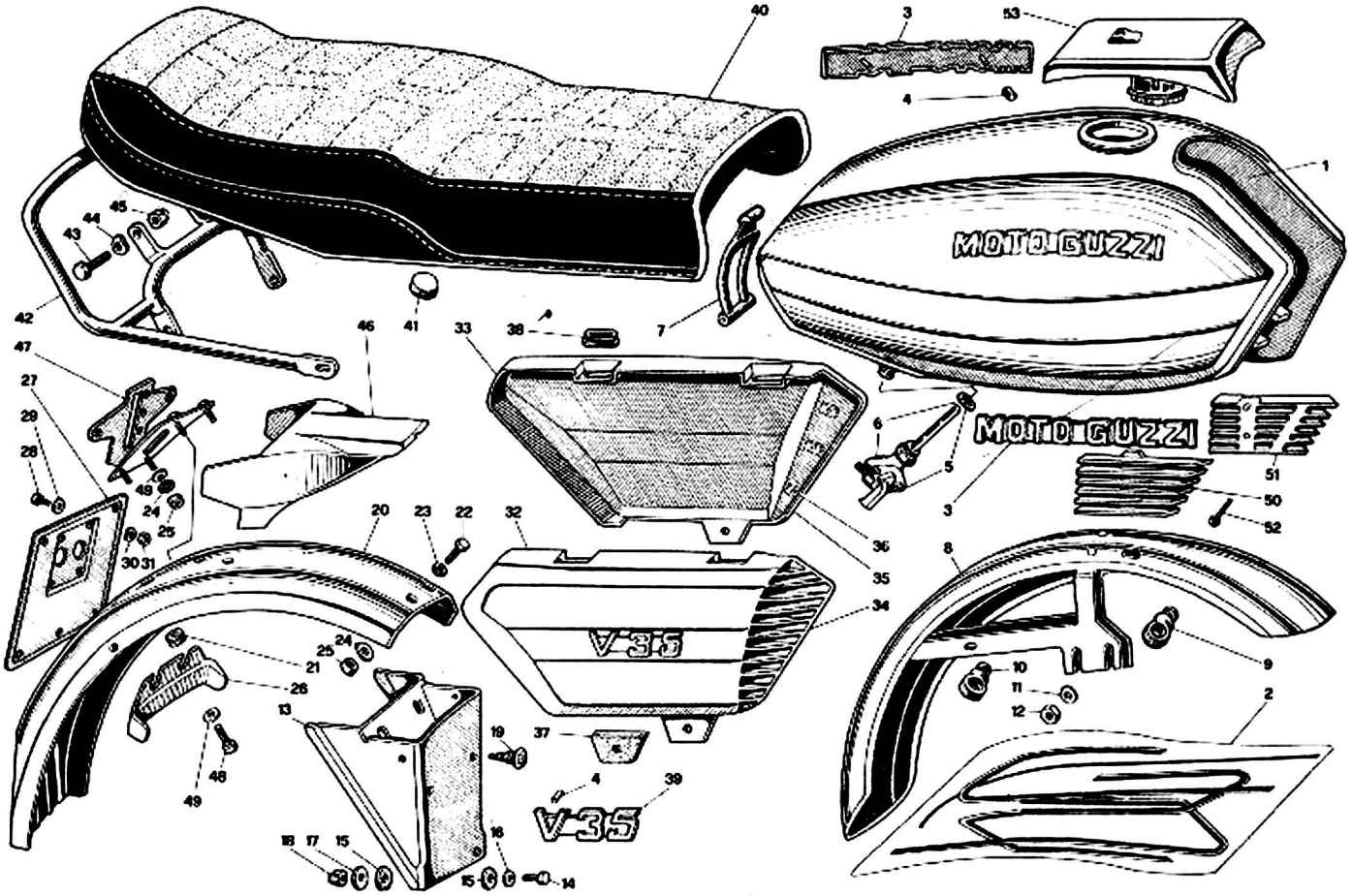

NOTE NOTES NOTES MARKE	POS. N.	N. COD. CODE No. Nr. CODE CODE Nr.	Q.tà Q.ty Q.tè M.ge	DENOMINAZIONE	DESCRIPTION	DESIGNATION	BEZEICHNUNG
●	1	19 10 02 01	1	Serbatoio rosso	Fuel tank (red)	Réservoir (rouge)	Kraftstoffbehälter (rot)
	1	19 10 02 02	1	Serbatoio grigio	Fuel tank (grey)	Réservoir (gris)	Kraftstoffbehälter (grau)
	2	19 92 33 00	1	Serie decalcom. (V35)	Decal set (V35)	Jeu de décalc. (V35)	Abziehbildsatz (V35)
	3	14 91 73 00	2	Marchio per serbatoio	Mark	Marque	Marke
	4	14 10 51 00	8	Fermaglio	Fasterner clip	Etrier	Schelle
	5	65 10 54 00	1	Rubinetto destro	R.H. fuel tap	Robinet D	Kraftstoffhahn, R.
	6	65 10 54 01	1	Rubinetto sinistro	L.H. fuel cap	Robinet G	Kraftstoffhahn, L.
	7	19 10 27 50	1	Tirante	Rod	Tirant	Stange
●	8	19 43 43 01	1	Parafango ant. rosso	Front fender (red)	Aile AV (rouge)	Vord. Kotflügel (rot)
	8	19 43 43 02	1	Parafango ant. grigio	Front fender (grey)	Aile AV (gris)	Vord. Kotflügel (grau)
	9	19 65 97 00	2	Occhiello	Screw eye	Oeillet	Anschlussöse
	10	19 43 65 00	1	Occhiello	Screw eye	Oeillet	Anschlussöse
	11	61 27 03 00	4	Rondella	Washer	Rondelle	Unterlegscheibe
	12	92 60 22 08	4	Dado	Nut	Ecrou	Mutter
	13	19 43 87 00	1	Paraspruzzi	Wheelshield	Cache-roue	Zierdeckel
	14	98 05 43 20	2	Vite	Screw	Vis	Schraube
	15	93 11 00 60	8	Spessore in gomma	Rubber spacer	Entretoise en caoutch.	Gummistück
	16	95 00 02 06	4	Rosetta piana	Washer	Rondelle	Unterlegscheibe
	17	95 10 01 41	4	Rosetta piana	Washer	Rondelle	Unterlegscheibe
	18	92 63 01 06	4	Dado autobloccante	Self-locking nut	Ecrou à autoblocage	Selbstklemmutter
	19	19 70 59 00	2	Tappo	Plug	Bouchon	Stopfen
●	20	19 43 70 01	1	Parafango post. rosso	Rear fender (red)	Aile AR (rouge)	Hint. Kotflügel (rot)
	20	19 43 70 02	1	Parafango post. grigio	Rear fender (grey)	Aile AR (gris)	Hint. Kotflügel (grau)
	21	91 55 11 02	1	Gommino passacavo	Rubber grommet	Guide câble	Gummistülle
	22	98 05 43 12	2	Vite	Screw	Vis	Schraube
	23	95 00 42 06	2	Rondella	Washer	Rondelle	Unterlegscheibe
	24	95 10 01 21	4	Rondella	Washer	Rondelle	Unterlegscheibe
	25	92 60 22 06	4	Dado	Nut	Ecrou	Mutter
	26	19 43 85 00	1	Supporto cavi	Cable support	Support de fils	Kabelstütze
	27	39 47 46 00	1	Piastra portatarga	Number pl. hol. plate	Plaque porte-pl. de pol.	Nummerschildplatte
	28	98 20 04 08	4	Vite	Screw	Vis	Schraube
	29	95 00 02 04	4	Rondella piana	Washer	Rondelle	Unterlegscheibe
	30	95 12 90 80	4	Rondella ondulata	Washer	Rondelle	Unterlegscheibe
	31	92 60 22 04	4	Dado	Nut	Ecrou	Mutter
●	32	19 47 62 01	1	Coperchio dx. rosso	R.H. cover (red)	Couvercle D (rouge)	Deckel R. (rot)
	32	19 47 62 02	1	Coperchio dx. grigio	R.H. cover (grey)	Couvercle D (gris)	Deckel R. (grau)

Seimm Moto Guzzi - 22054 Mandello del Lario (Co) - Tel. 731112 - 732512 - Tx: 38095 - 6/77 - 2500 K

Printed in Italy

Dati indicativi soggetti a modifiche senza impegno di preavviso - All data are subject to modification without notice

Scanzorosciate (Bg)

V35-V50	CARROZZERIA BODY CARROSSERIE KAROSSERIE		SEIMM MOTO GUZZI
Tavola - Drawing Table - Bild 13			

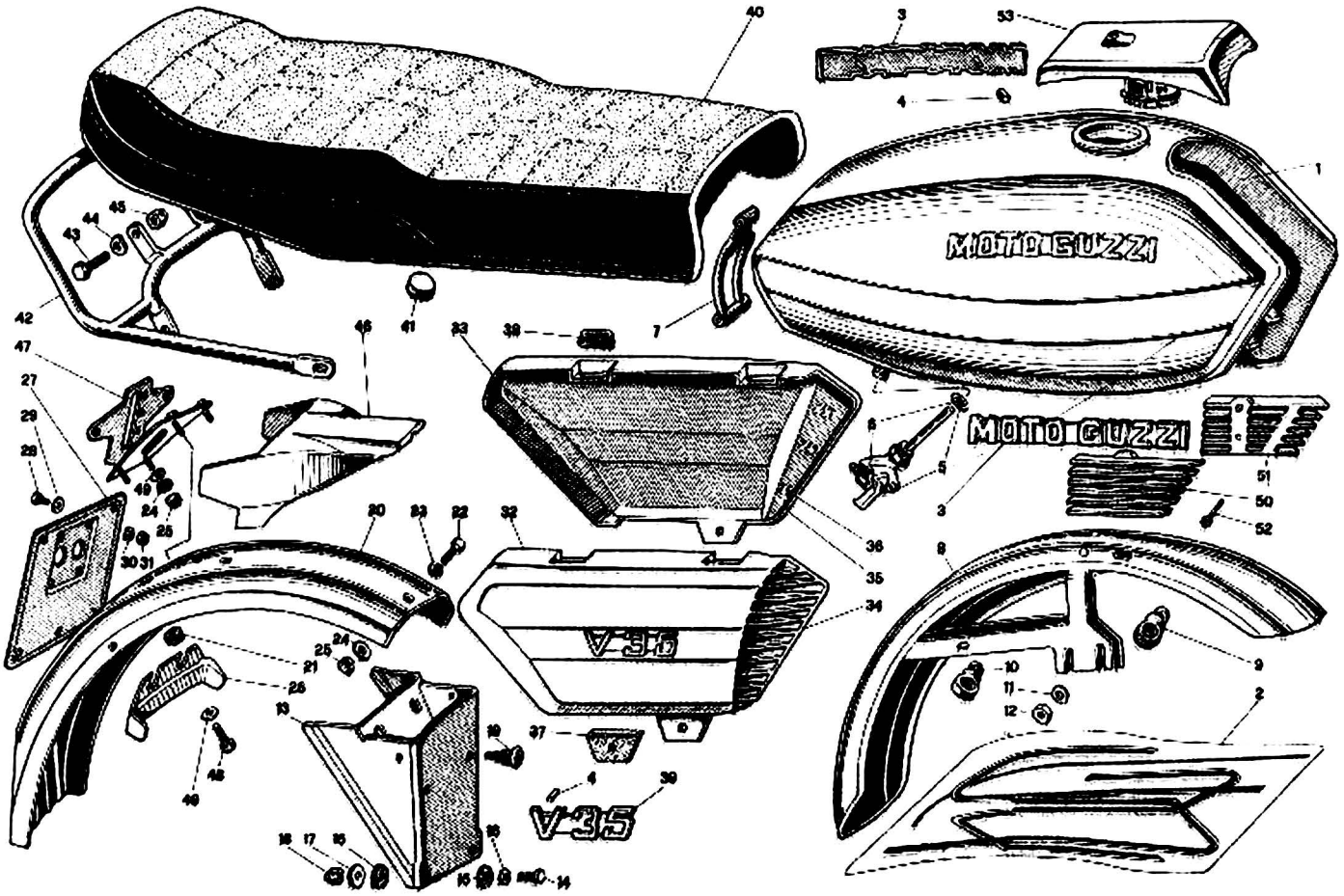

NOTE NOTES NOTES MARKE	POS. N.	N. COD. CODE No. Nr. CODE CODE Nr.	Q.tà Q.ty Q.té M.ge	DENOMINAZIONE	DESCRIPTION	DESIGNATION	BEZEICHNUNG
●	33	19 47 63 01	1	Coperchio sx. rosso	L.H. cover (red)	Couvercle G (rouge)	Deckel L. (rot)
	33	19 47 63 02	1	Coperchio sx. grigio	L.H. cover (grey)	Couvercle G (gris)	Deckel L. (grau)
	34	19 47 81 50	1	Griglia destra	R.H. cover grill	Grille D	Deckelgrill R.
	35	19 47 82 50	1	Griglia sinistra	L.H. cover grill	Grille G	Deckelgrill L.
	36	39 92 22 00	6	Piastrina a pressione	Plate	Plaque	Platte
	37	19 47 85 50	2	Settore elastico	Flexible spacer ring	Entretoise élast.	Elas. Distanzrohr
	38	19 47 87 50	4	Gommino	Rubber block	Caoutchouc	Gummistück
●	39	19 92 20 00	2	Marchio	Mark	Marque	Marke
	40	19 46 05 50	1	Sella completa	Saddle, compl.	Selle complète	Sattel, kpl.
	41	19 46 16 50	4	Tampone	Rubber ring	Disque en caoutch.	Gummiring
	42	19 46 43 50	1	Maniglia	Handgrip	Poignée	Handgriff
	43	98 05 44 20	2	Vite	Screw	Vis	Schraube
	44	61 27 03 00	2	Rondella elastica	Spring washer	Rondelle élastique	Federscheibe
	45	92 63 01 08	2	Dado autofrenante	Nut	Ecrou	Mutter
	46	19 74 10 00	1	Carenatura per fanal.	Support	Support	Halter
	47	19 74 12 00	1	Supporto per fanal.	Support	Support	Halter
	48	98 05 43 14	2	Vite	Screw	Vis	Schraube
	49	95 10 01 21	4	Rondella	Washer	Rondelle	Unterlegscheibe
	50	19 92 50 00	1	Griglia destra	R.H. grill	Grille D	Grill R.
	51	19 92 51 00	1	Griglia sinistra	L.H. grill	Grille G	Grill L.
	52	98 29 05 11	2	Vite	Screw	Vis	Schraube
	53	19 10 39 60	1	Tappo compl. senza serratura	Plug assy without lock	Bouchon complet sans serrure	Stopfen, kpl. ohne Schloss

● **Varianti per modello V50**
Modifications for V50 model
Variantes pour modèle V50
Umänderungen für Modell V50

1	19 10 02 51	1	Serbatoio rosso	Fuel tank (red)	Réservoir (rouge)	Kraftstoffbehälter (rot)
1	19 10 02 53	1	Serbatoio azzurro metallizzato	Fuel tank (metall. light blue)	Réservoir (bleu clair métallisé)	Kraftstoffbehälter (metall. blau)
1	19 10 02 54	1	Serbatoio giallo	Fuel tank (yellow)	Réservoir (jaune)	Kraftstoffbehälter (gelb)

Seimm Moto Guzzi 22054 Mandello del Lario (Co) Tel. 731112 - 732512 Tx 38095 - 6/77 2500 K Printed in Italy

Dati indicativi soggetti a modifiche senza impegno di preavviso All data are subject to modification without notice Scanzorosciate (Bg)

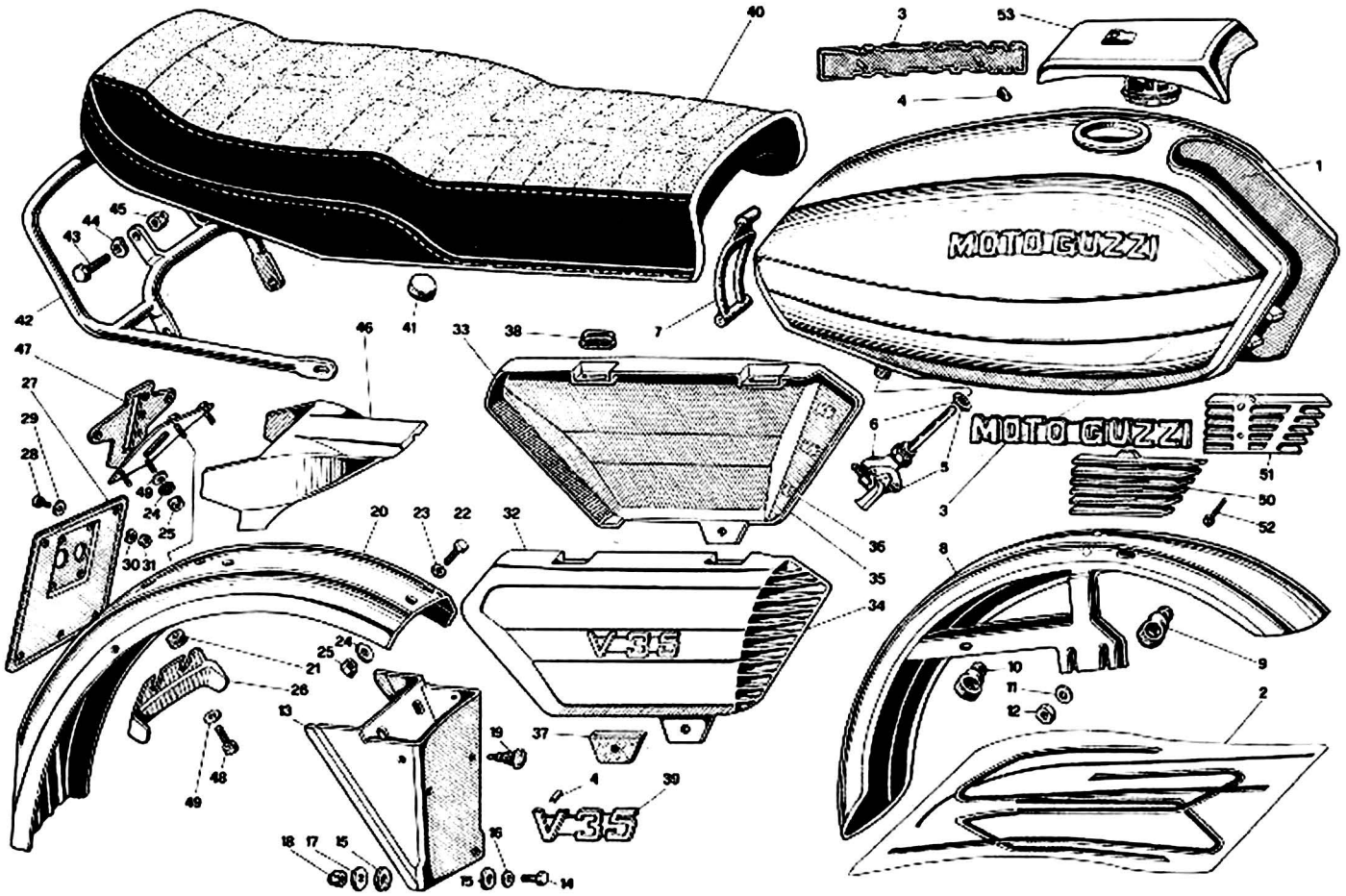

NOTE NOTES NOTES MARKE	POS. N.	N. COD. CODE No. Nr. CODE CODE Nr.	Q.tà Q.ty Q.tè M.ge	DENOMINAZIONE	DESCRIPTION	DESIGNATION	BEZEICHNUNG
	8	19 43 43 01	1	Parafango ant. rosso	Front fender (red)	Aile AV (rouge)	Vord. Kotflügel (rot)
	8	19 43 43 53	1	Parafango ant. azzurro metallizzato	Front fender (metall. light blue)	Aile AV (bleu clair métallisé)	Vord. Kotflügel (metall. blau)
	8	19 43 43 54	1	Parafango ant. giallo	Front fender (yellow)	Aile AV (jaune)	Vord. Kotflügel (gelb)
	20	19 43 70 01	1	Parafango post. rosso	Rear fender (red)	Aile AR (rouge)	Hint. Kotflügel (rot)
	20	19 43 70 53	1	Parafango post. azzurro metallizzato	Rear fender (metall. light blue)	Aile AR (bleu clair métallisé)	Hint. Kotflügel (metall. blau)
	20	19 43 70 54	1	Parafango post. giallo	Rear fender (yellow)	Aile AR (jaune)	Hint. Kotflügel (gelb)
	32	19 47 62 51	1	Coperchio dx. rosso	R.H. cover (red)	Couvercle D (rouge)	Deckel R. (rot)
	32	19 47 62 53	1	Coperchio dx. azzurro metallizzato	R.H. cover (metall. light blue)	Couvercle D (bleu clair métallisé)	Deckel R. (metall. blau)
	32	19 47 62 54	1	Coperchio dx. giallo	R.H. cover (yellow)	Couvercle D (jaune)	Deckel R. (gelb)
	33	19 47 63 51	1	Coperchio sx. rosso	L.H. cover (red)	Couvercle G (rouge)	Deckel L. (rot)
	33	19 47 63 53	1	Coperchio sx. azzurro metallizzato	L.H. cover (metall. light blue)	Couvercle G (bleu clair métallisé)	Deckel L. (metall. blau)
	33	19 47 63 54	1	Coperchio sx. giallo	L.H. cover (yellow)	Couvercle G (jaune)	Deckel, L. (gelb)
	39	19 92 20 51	2	Marchio V50	V50 mark	Marque V50	V50 Marke

Dati indicativi soggetti a modifiche senza impegno di preavviso - All data are subject to modification without notice Bieffe Scanzorosciate (Bg)

SEIMM MOTO GUZZI	SOSPENSIONI ANTER. E POSTER. FRONT AND REAR SUSPENSIONS SUSPENSIONS AV ET AR VORD. - HINTERRADAUFHÄNGUNG		V35-V50 Tavola - Drawing Table - Bild 14

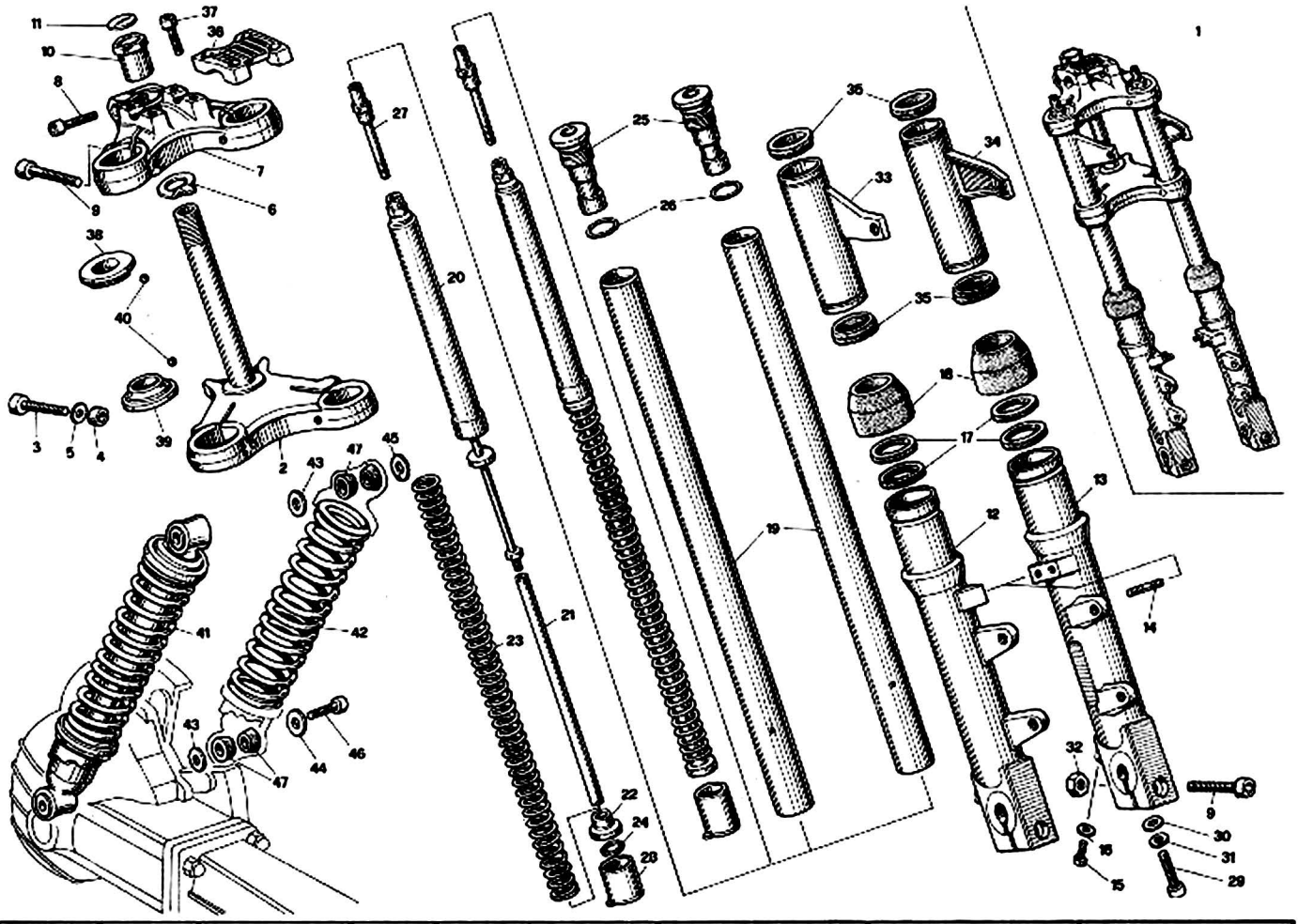

NOTE NOTES NOTES MARKE	POS. N.	N. COD. CODE No. Nr. CODE CODE Nr.	Q.tà Q.ty Q.tè M.ge	DENOMINAZIONE	DESCRIPTION	DESIGNATION	BEZEICHNUNG
	1	19 49 02 00	1	Forcella anter. compl.	Front fork, assy	Fourche AV, compl.	Vordere Gabel, kpl.
	2	39 49 40 02	1	Base forcella	Fork yoke	Chape de fourche	Gabeluntersatz
	3	98 62 05 55	2	Vite	Screw	Vis	Schraube
	4	91 18 11 10	2	Bussola	Bush	Douille	Buchse
	5	95 00 42 10	2	Rondella	Washer	Rondelle	Unterlegscheibe
	6	62 49 32 00	1	Rondella di fermo	Washer	Rondelle	Unterlegscheibe
	7	39 49 31 01	1	Testa per forcella	Fork head	Tête de fourche	Gabelkopf
	8	98 62 04 35	1	Vite	Screw	Vis	Schraube
	9	98 62 05 40	4	Vite	Screw	Vis	Schraube
	10	17 51 66 00	1	Bussola bloccasterzo	Bush	Douille	Buchse
	11	17 51 77 00	1	Marchio per bussola	Mark	Marque	Marke
	12	39 52 25 01	1	Gambale destro	R.H. sleeve	Chemise D	Laufbüchse R.
	13	39 52 26 01	1	Gambale sinistro	L.H. sleeve	Chemise G	Laufbüchse L.
	14	96 50 80 21	4	Prigioniero	Stud bolt	Goujon	Stiftschraube
	15	98 62 03 12	2	Vite scarico olio	Oil drain screw	Vis de vidange huile	Ölablassschraube
	16	95 10 01 16	2	Rondella alluminio	Washer	Rondelle	Unterlegscheibe
	17	90 40 32 42	4	Anello di tenuta	Seal ring	Bague d'étanchéité	Dichtring
	18	53 52 45 40	2	Custodia gambali	Dust guard	Cache poussière	Schmutzfänger
	19	39 52 54 01	2	Braccio per forcella	Fork arm	Bras pour fourche	Gabelarm
	20	14 52 64 07	2	Ammortizzatore	Shock absorber	Amortisseur	Stossdämpfer
	21	53 52 78 40	2	Tubo per asta	Pipe	Tuyau	Rohr
	22	53 52 79 40	2	Estremità per asta	Tube end	Embout	Rohrende
	23	19 52 66 00	2	Molla	Spring	Ressort	Feder
	24	90 27 10 12	2	Anello Seeger	Snap ring	Jonc d'arrêt	Seegerring
	25	39 50 45 01	2	Tappo superiore	Upper plug	Bouchon supér.	Oberstopfen
	26	90 70 62 02	2	Anello di tenuta	Seal ring	Bague d'étanchéité	Dichtring
	27	19 50 48 00	2	Vite	Screw	Vis	Schraube
	28	53 52 76 40	2	Scodellino inferiore	Lower cap	Coupelle infér.	Unt. Manschette
	29	98 62 34 30	2	Vite	Screw	Vis	Schraube
	30	12 15 42 00	2	Rondella	Washer	Rondelle	Unterlegscheibe
	31	95 00 42 08	2	Rosetta	Washer	Rondelle	Unterlegscheibe
	32	92 60 22 10	2	Dado	Nut	Ecrou	Mutter
	33	19 49 61 00	1	Fodero destro	R.H. stay tube	Tuyau étai D	Stützrohr, R.
	34	19 49 62 00	1	Fodero sinistro	L.H. stay tube	Tuyau étai G	Stützrohr, L.
	35	39 49 27 01	4	Anello	Ring	Bague	Ring
	36	19 50 02 00	1	Morsetto	Clamp	Collier	Klemme

Seimm Moto Guzzi - 22054 Mandello del Lario (Co) - Tel. 731112 - 732512 - Tx: 38095 - 6/77 - 2500 K Printed in Italy

Dati indicativi soggetti a modifiche senza impegno di preavviso - All data are subject to modification without notice Scanzorosciate (Bg)

V35-V50	SOSPENSIONI ANTER. E POSTER. FRONT AND REAR SUSPENSIONS SUSPENSIONS AV ET AR VORD. - HINTERRADAUFHÄNGUNG		SEIMM MOTO GUZZI
Tavola - Drawing Table - Bild **14**			

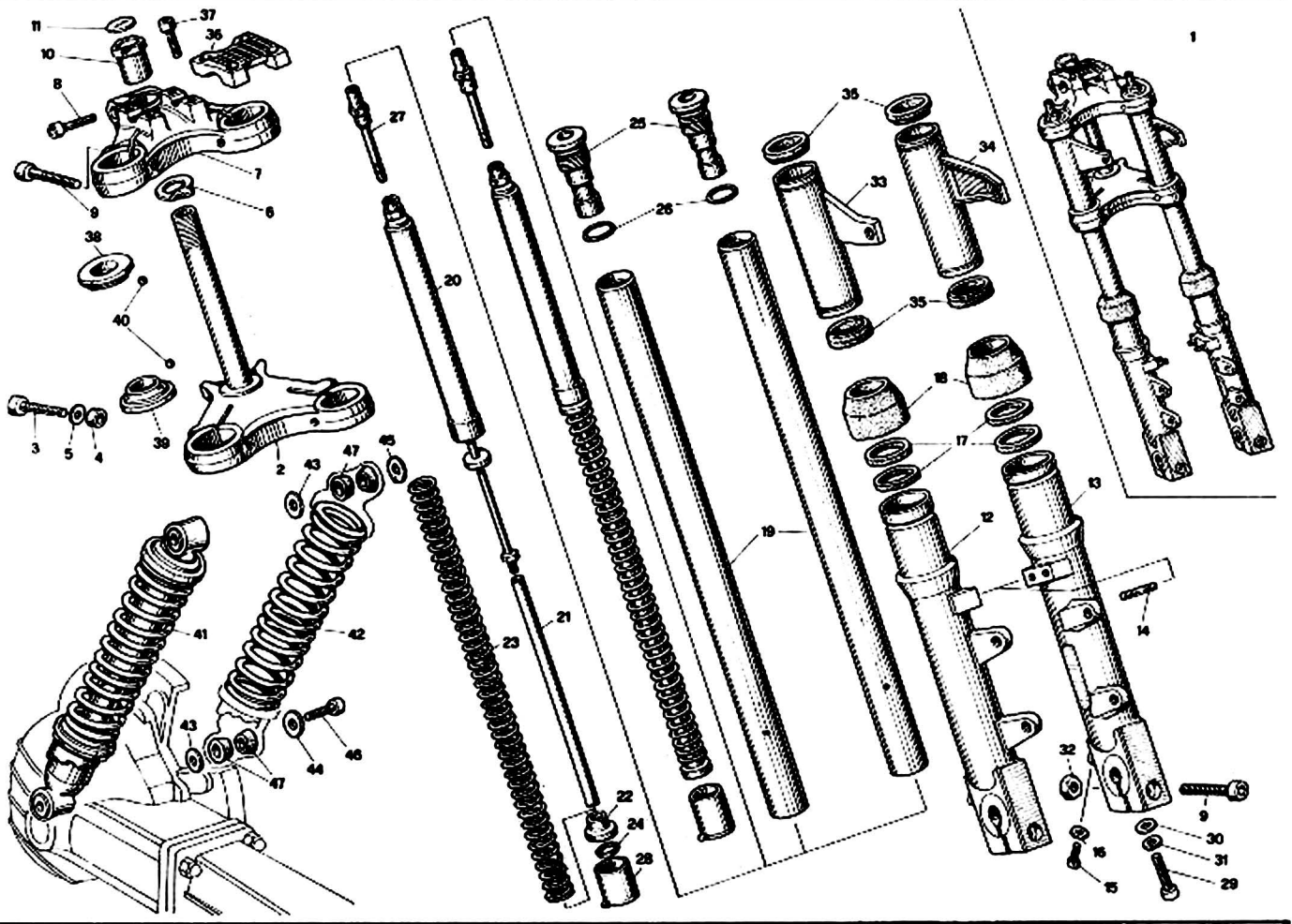

NOTE NOTES NOTES MARKE	POS. N.	N. COD. CODE No. Nr. CODE CODE Nr.	Q.tà Q.ty Q.tè M.ge	DENOMINAZIONE	DESCRIPTION	DESIGNATION	BEZEICHNUNG
	37	98 83 04 30	4	Vite	Screw	Vis	Schraube
	38	61 51 49 40	1	Calotta superiore	Upper cap	Chapeau supér.	Oberkappe
	39	61 51 52 40	1	Calotta inferiore	Lower cap	Chapeau infér.	Unterkappe
	40	92 29 57 04	44	Sfera	Ball	Bille	Kugel
	41	19 55 02 00	2	Sospensioni poster.	Rear suspensions	Suspensions AR	Hint. Aufhängung
	42	19 55 23 00	2	Molla	Spring	Ressort	Feder
	43	95 00 42 15	4	Rondella interna	Inside washer	Rondelle intérieure	Innenscheibe
	44	95 10 02 55	2	Rondella esterna inf.	Outside washer	Rondelle extérieure	Aussenscheibe
	45	95 00 02 08	2	Rondella esterna sup.	Outside washer	Rondelle extérieure	Aussenscheibe
	46	98 82 24 16	4	Vite	Screw	Vis	Schraube
	47	10 55 16 00	8	Boccola	Bush	Douille	Buchse

Saimm Moto Guzzi - 22054 Mandello del Lario (Co) - Tel. 731112 - 732512 - Tx: 38095 - 6/77 - 2500 K Printed in Italy

Dati indicativi soggetti a modifiche senza impegno di preavviso - All data are subject to modification without notice Scanzorosciate (Bg)

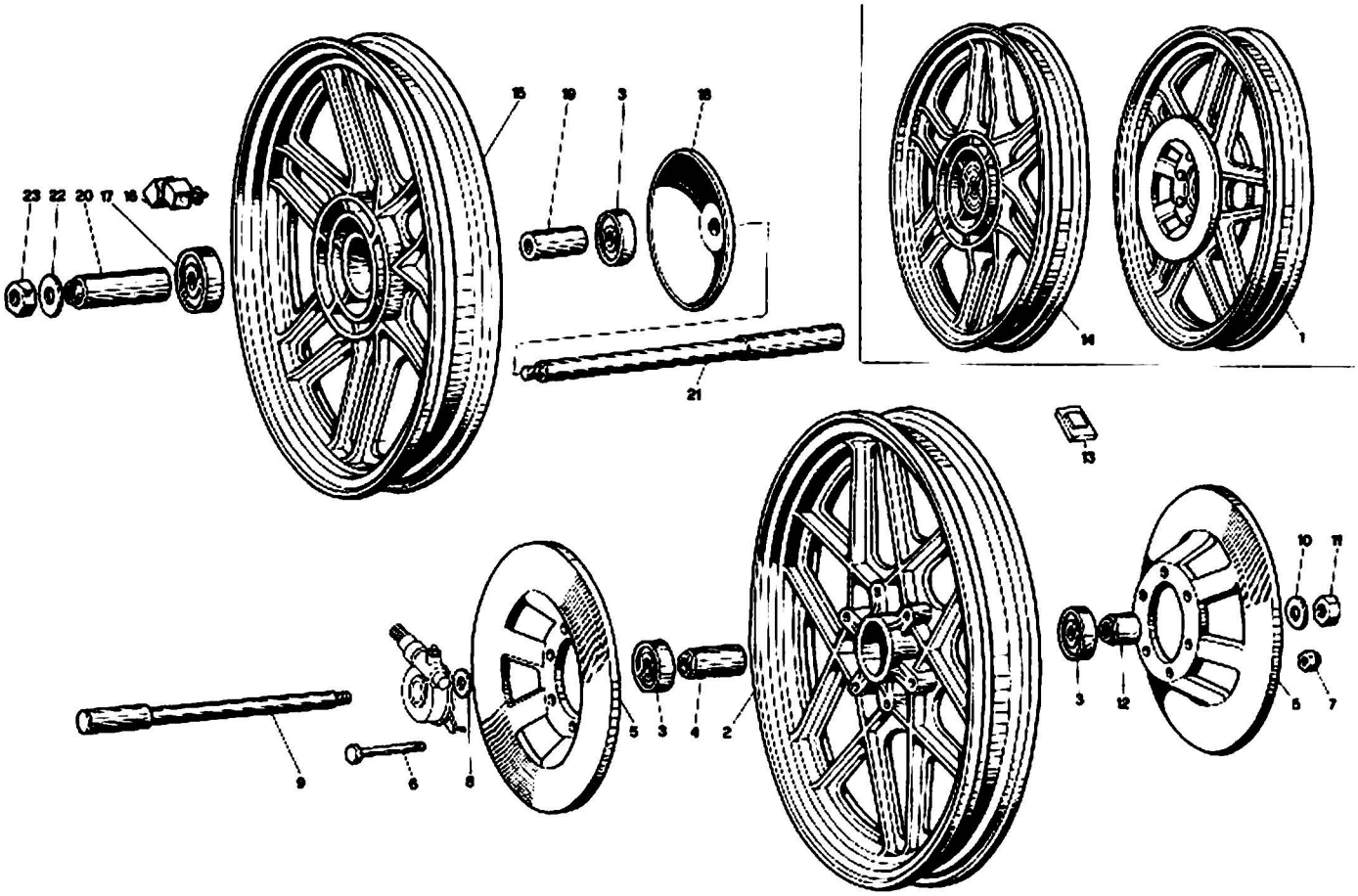

NOTE NOTES NOTES MARKE	POS. N.	N. COD. CODE No. Nr. CODE CODE Nr.	Q.tà Q.ty Q.tà M.ge	DENOMINAZIONE	DESCRIPTION	DESIGNATION	BEZEICHNUNG
	1	19 61 02 00	1	Ruota anter. compl.	Front wheel, compl.	Roue AV compl.	Vorderrad, kpl.
	2	19 61 03 00	1	Ruota anteriore (1.85" x 18")	Front wheel (1.85" x 18")	Roue AV (1.85" x 18")	Vorderrad (1.85" x 18")
	3	92 20 42 17	3	Cuscinetto per mozzo	Bearing	Roulement	Lager
	4	39 61 52 01	1	Distanziale	Spacer	Entretoise	Distanzstück
	5	19 61 33 00	2	Disco freno anter.	Front disc	Disque AV	Vord. Bremsscheibe
	6	98 05 24 60	6	Vite	Screw	Vis	Schraube
	7	92 63 05 08	6	Dado autofrenante	Nut	Ecrou	Mutter
	8	91 18 18 03	1	Distanziale	Spacer	Entretoise	Distanzstück
	9	19 61 41 00	1	Perno ruota anter.	Front wheel pin	Goujon roue AV	Vorderradstift
	10	95 00 42 17	1	Rosetta	Washer	Rondelle	Unterlegscheibe
	11	92 60 25 16	1	Dado	Nut	Ecrou	Mutter
	12	39 61 63 01	1	Distanziale	Spacer	Entretoise	Distanzstück
	13	14 61 61 50	1 ÷ 2	Tavoletta contrappesi	Balance weight	Masse additive	Gewichtsausgleich
	14	19 63 02 00	1	Ruota poster. compl.	Rear wheel, compl.	Roue AR compl.	Hinterrad, kpl.
	15	19 63 06 00	1	Ruota poster. nuda (2.15" x 18")	Rear wheel (2.15" x 18")	Roue AR (2.15" x 18")	Hinterrad (2.15" x 18")
	16	19 63 25 00	6	Elemento parastrappi	Rubber coupling	Joint en caoutchouc	Gummikupplung
	17	92 20 42 18	1	Cuscinetto a sfere	Ball bearing	Roulement à billes	Kugellager
	18	19 63 64 00	1	Protezione	Protection	Protection	Schutz
	19	19 63 40 00	1	Distanziale	Spacer	Entretoise	Distanzstück
	20	19 63 41 00	1	Distanziale	Spacer	Entretoise	Distanzstück
	21	19 63 33 00	1	Perno per ruota	Wheel pin	Goujon pour roue	Radstift
	22	14 63 44 00	1	Rondella	Washer	Rondelle	Unterlegscheibe
	23	92 60 23 16	1	Dado	Nut	Ecrou	Mutter

Dati indicativi soggetti a modifiche senza impegno di preavviso - All data are subject to modification without notice Senzoroscuote (Bg)

SEIMM MOTO GUZZI

PEDALIERA E COMANDI
PEDAL AND CONTROLS
PEDALE ET COMMANDES
PEDAL UND ANTRIEB

V35-V50

Tavola - Drawing
Table - Bild **16**

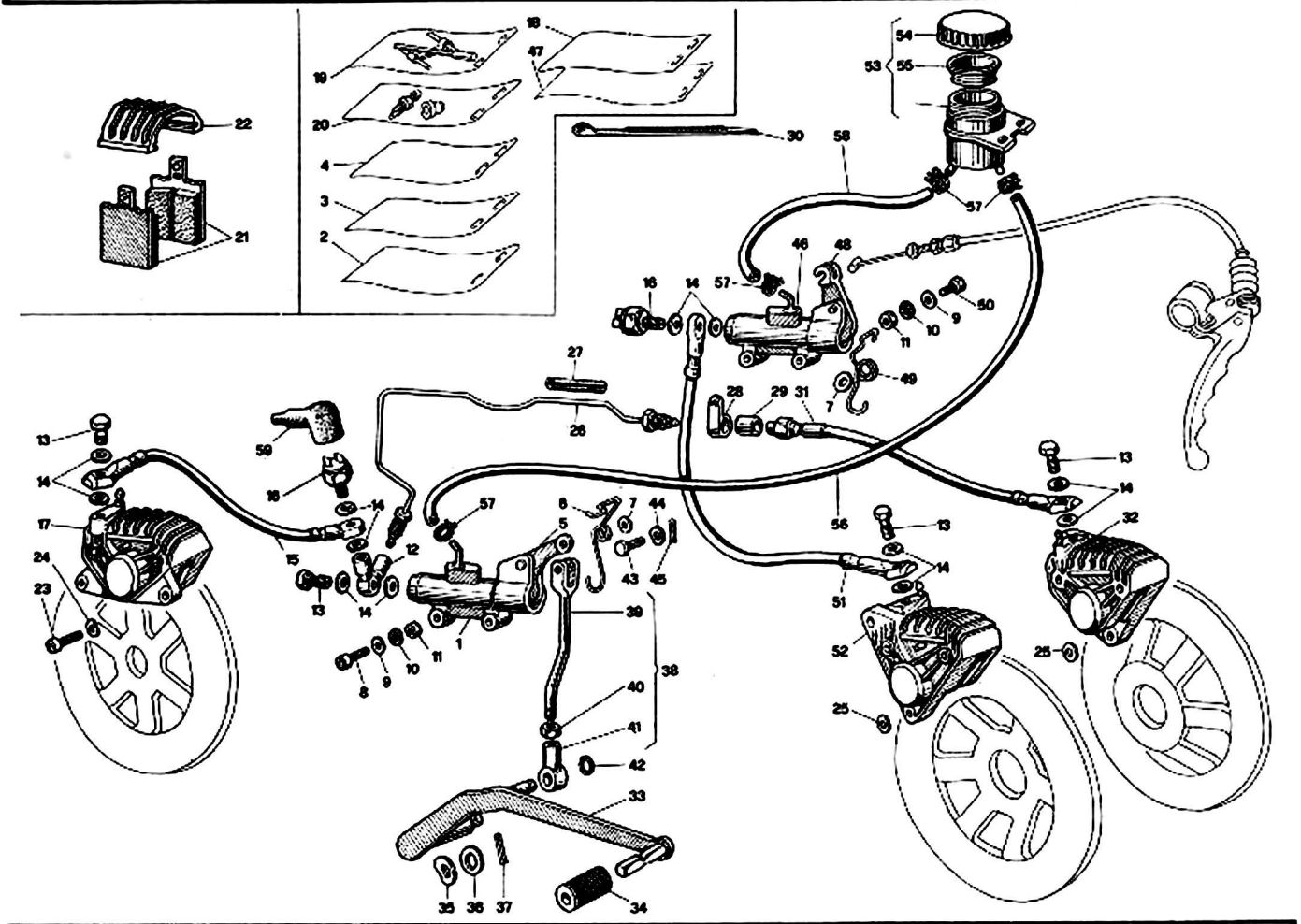

NOTE NOTES NOTES MARKE	POS. N.	N. COD. CODE No. Nr. CODE CODE Nr.	Q.tà Q.ty Q.tè M.ge	DENOMINAZIONE	DESCRIPTION	DESIGNATION	BEZEICHNUNG
	1	19 66 70 00	1	Pompa com. freni ant. sin. e post. senza leva	L.H. front & rear brake pump without lever	Pompe frein AV G et AR sans levier	L. Vor. u. Hint. Bremse-pumpe ohne Hebel
	2	17 65 93 50	1	Gruppo rev. guarniz.	Gaskets kit	Kit de joints	Dichtung - Rep.-Satz
	3	19 65 96 00	2	Gruppo rev. perni leva	Lever pins kit	Kit de goujons levier	Hebelstift - Rep.-Satz
	4	19 65 95 00	2	Gruppo rev. raccordo	Unions kit	Kit de raccords	Verbindung - Rep-Satz
	5	19 66 75 00	1	Leva com. pompa	Pump lever	Levier comm. pompe	Pumpehebel
	6	19 66 76 00	1	Molla	Spring	Ressort	Feder
	7	95 00 42 06	4	Rondella	Washer	Rondelle	Unterlegscheibe
	8	98 05 23 26	2	Vite fiss. pompa	Screw	Vis	Schraube
	9	61 01 38 00	2	Rondella piana	Washer	Rondelle	Unterlegscheibe
	10	95 02 11 06	4	Rondella dentellata	Washer	Rondelle	Unterlegscheibe
	11	92 60 22 06	4	Dado	Nut	Ecrou	Mutter
	12	19 66 80 00	1	Ripartitore	Brake joint	Raccord frein	Bremse Anschluss
	13	95 99 00 33	4	Vite cava	Screw	Vis	Schraube
	14	25 65 61 00	12	Guarnizione	Gasket	Joint	Dichtung
	15	17 65 71 01	1	Tubazione ripart.	Pipe	Tuyau	Rohr
	16	14 65 70 50	2	Interruttore idraulico	Stop light switch	Contacteur de stop	Stoplichtschalter
	17	19 65 30 00	1	Pinza per freno post.	Rear brake caliper	Etrier frein AR	Hint. Bremsesattel
	18	39 65 90 00	3	Gruppo rev. guar. pin.	Caliper gaskets kit	Kit de joints etrier	Dichtung - Rep.-Satz
	19	39 65 91 00	3	Gruppo rev. perni past.	Pins kit	Kit de pivots	Bremsbelag - Rep.-Satz
	20	14 65 92 00	3	Gruppo rev. spurgo	Screws kit	Kit de vis	Schrauben - Rep.-Satz
	21	19 65 46 00	4	Past. per pinze ant. dx. e post. (ferit. 334 FG)	Pads for R.H. front & rear cal. (slit 334 FG)	Patins pour étrier AV D et AR (fente 334 FG)	Bremsbelag für R. Vor. u. Hin. Fests. (Schl. 334 FG)
	21	19 65 46 01	2	Pastiglie per pinze ant. sin. (ferit. 336 GG)	Pads for L.H. front caliper (slit 336 GG)	Patins pour étrier AV G (fente 336 GG)	Bremsbelag für L. Vord. Fests. (Schl. 336 GG)
	22	39 65 47 00	3	Coperchio feritoia	Cover	Couvercle	Deckel
	23	98 62 24 22	6	Vite	Screw	Vis	Schraube
	24	61 27 03 00	6	Rondella elastica	Spring washer	Rondelle élastique	Federscheibe
	25	95 10 02 50	0 ÷ 4	Rosetta di spallamento (mm 0,5)	Spacer washer (mm 0.5)	Rondelle d'épaulement (mm 0,5)	Einstellscheibe (mm 0,5)
	25	95 10 02 51	0 ÷ 4	Rosetta di spallamento (mm 0,8)	Spacer washer (mm 0.8)	Rondelle d'épaulement (mm 0,8)	Einstellscheibe (mm 0,8)
	26	19 65 87 00	1	Tubazione rigida	Not flexible pipe	Tuyau rigide	Starrohr
	27	17 65 96 50	2	Fascia elastica	Clamp	Collier	Klemme
	28	62 43 65 00	1	Occhiello tubaz. fless.	Pipe eyelet	Oeillet tuyau	Rohranschlussöse
	29	90 71 61 42	1	Gommino antivibr.	Rubber block	Caoutchouc	Gummistück

Seimm Moto Guzzi 22054 Mandello del Lario (Co) Tel. 731112 - 732512 - Tx: 38095 · 6/77 · 2500 K Printed in Italy

Dati indicativi soggetti a modifiche senza impegno di preavviso All data are subject to modification without notice Scanzorosciate (Bg)

V35-V50	PEDALIERA E COMANDI PEDAL AND CONTROLS PEDALE ET COMMANDES PEDAL UND ANTRIEB		SEIMM MOTO GUZZI
Tavola - Drawing Table - Bild **16**			

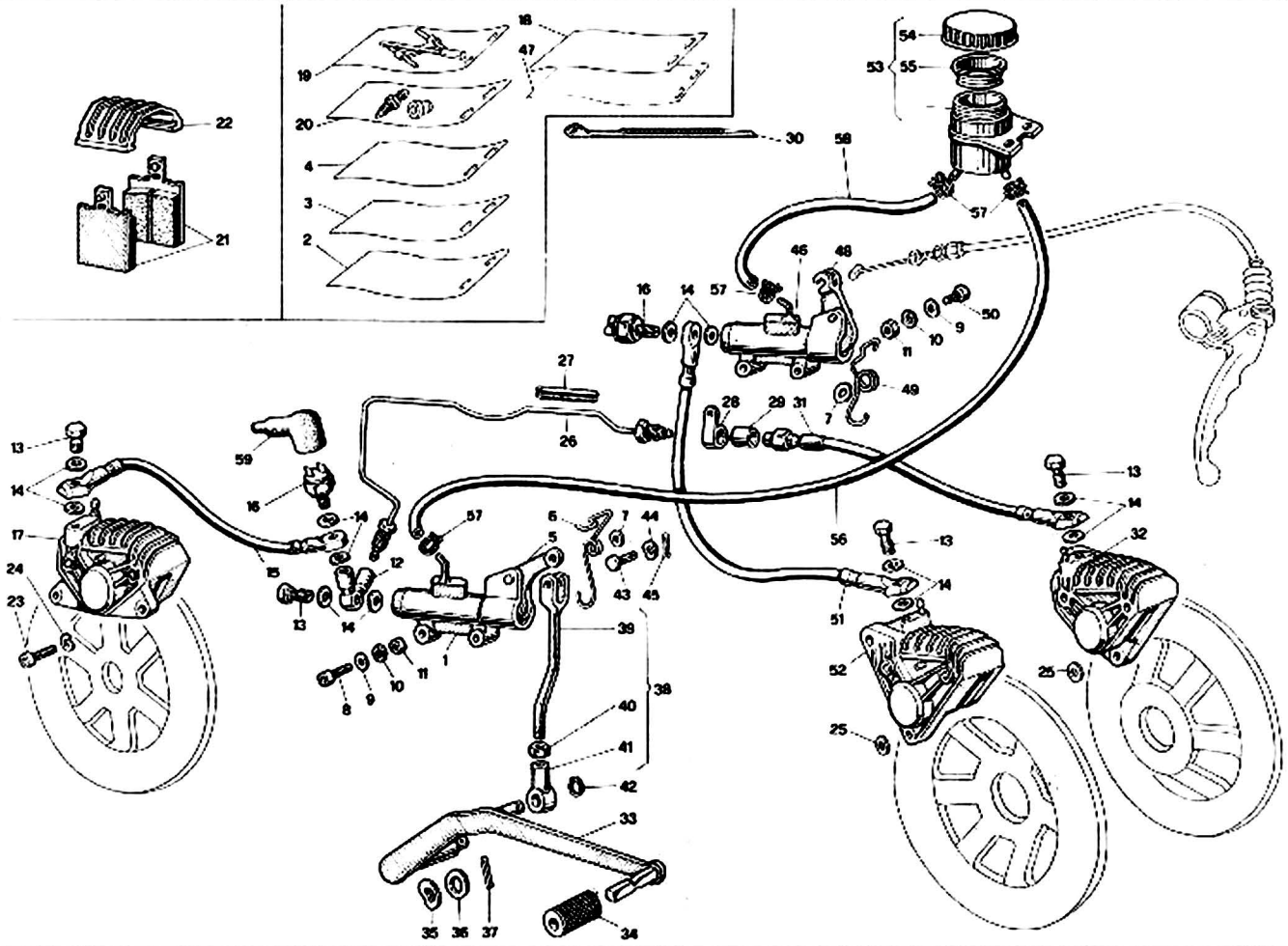

NOTE NOTES NOTES MARKE	POS. N.	N. COD. CODE No. Nr. CODE CODE Nr.	Q.tà Q.ty Q.té M.ge	DENOMINAZIONE	DESCRIPTION	DESIGNATION	BEZEICHNUNG
	30	14 60 96 50	2	Fascetta fiss. tubaz.	Clamp	Collier	Klemme
	31	14 65 88 50	1	Tubazione flessibile	Flexible pipe	Tuyau flexible	Bremsschlauch
	32	19 65 23 00	1	Pinza anter. sinistra	L.H. front caliper	Etrier AV G	Vord. Festsattel L.
	33	19 67 70 00	1	Leva com. freni	Brake lever	Levier comm. frein	Bremsehebel
	34	14 25 10 01	1	Pedalino in gomma	Rubber pedal	Pédale en caoutchouc	Gummiglaitschutze
	35	95 12 92 60	1	Rondella elastica	Spring washer	Rondelle élastique	Federscheibe
	36	95 00 42 15	1	Rondella piana	Washer	Rondelle	Unterlegscheibe
	37	95 50 02 27	1	Copiglia	Cotter pin	Goupille	Splint
	38	19 67 50 00	1	Tirante completo	Connecting rod, comp.	Tige interm. compl.	Zwischenstange, kpl.
	39	19 67 51 00	1	Tirante	Connecting rod	Tige intermédiaire	Zwischenstange
	40	92 70 00 73	1	Dado	Nut	Ecrou	Mutter
	41	18 25 75 51	1	Blocchetto	Block	Bloc	Block
	42	90 27 10 08	1	Anello Seeger	Ring	Jonc d'arrêt	Seegerring
	43	95 78 02 65	1	Spina	Pin	Pivot	Stift
	44	95 12 91 10	1	Rondella antivibr.	Washer	Rondelle	Unterlegscheibe
	45	95 50 02 22	1	Copiglia	Cotter pin	Goupille	Splint
	46	19 66 02 00	1	Pompa freno senza leva	Brake pump without lever	Pompe frein sans levier	Bremsepumpe ohne Hebel
	47	17 65 93 52	1	Gruppo rev. guarniz.	Gaskets kit	Kit de joints	Dichtung - Rep.-Satz
	48	19 66 33 00	1	Leva com. pompa	Pump lever	Levier comm. pompe	Pumpehebel
	49	19 66 26 00	1	Molla	Spring	Ressort	Feder
	50	98 05 23 25	2	Vite	Screw	Vis	Schraube
	51	19 65 71 00	1	Tubazione flessibile	Flexible pipe	Tuyau flexible	Bremsschlauch
	52	19 65 22 00	1	Pinza idraulica destra	R.H. caliper	Etrier D	Festsattel, R.
	53	19 66 50 00	1	Serbatoio per fl. freni	Tank	Réservoir	Behälter
	54	14 66 11 00	1	Tappo per serbatoio	Tank cap	Bouchon du réserv.	Behälterstopfen
	55	14 66 13 00	1	Membrana a soffietto	Membran	Membrane	Membran
	56	95 98 56 72	1	Tubazione	Pipe	Tuyau	Rohr
	57	61 10 85 00	4	Fascetta elastica	Clamp	Collier	Klemme
	58	95 98 56 16	1	Tubazione serb. pompa	Tank pipe	Tuyau réserv. pompe	Behalterrohr
	59	12 73 51 00	2	Cappuccio	Cap	Capuchon	Kappe

Seimm Moto Guzzi - 22054 Mandello del Lario (Co) - Tel. 731112 - 732512 - Tx: 38095 6/77 2500 K Printed in Italy

Dati indicativi soggetti a modifiche senza impegno di preavviso - All data are subject to modification without notice Scanzorosciate (Bg)

SEIMM MOTO GUZZI	STRUMENTAZIONE - COMANDI INSTRUMENT PANEL - CONTROLS TABLEAU DE BORD - COMMANDES INSTRUMENTENBRETT - ANTRIEB		V35-V50 Tavola - Drawing Table - Bild 17

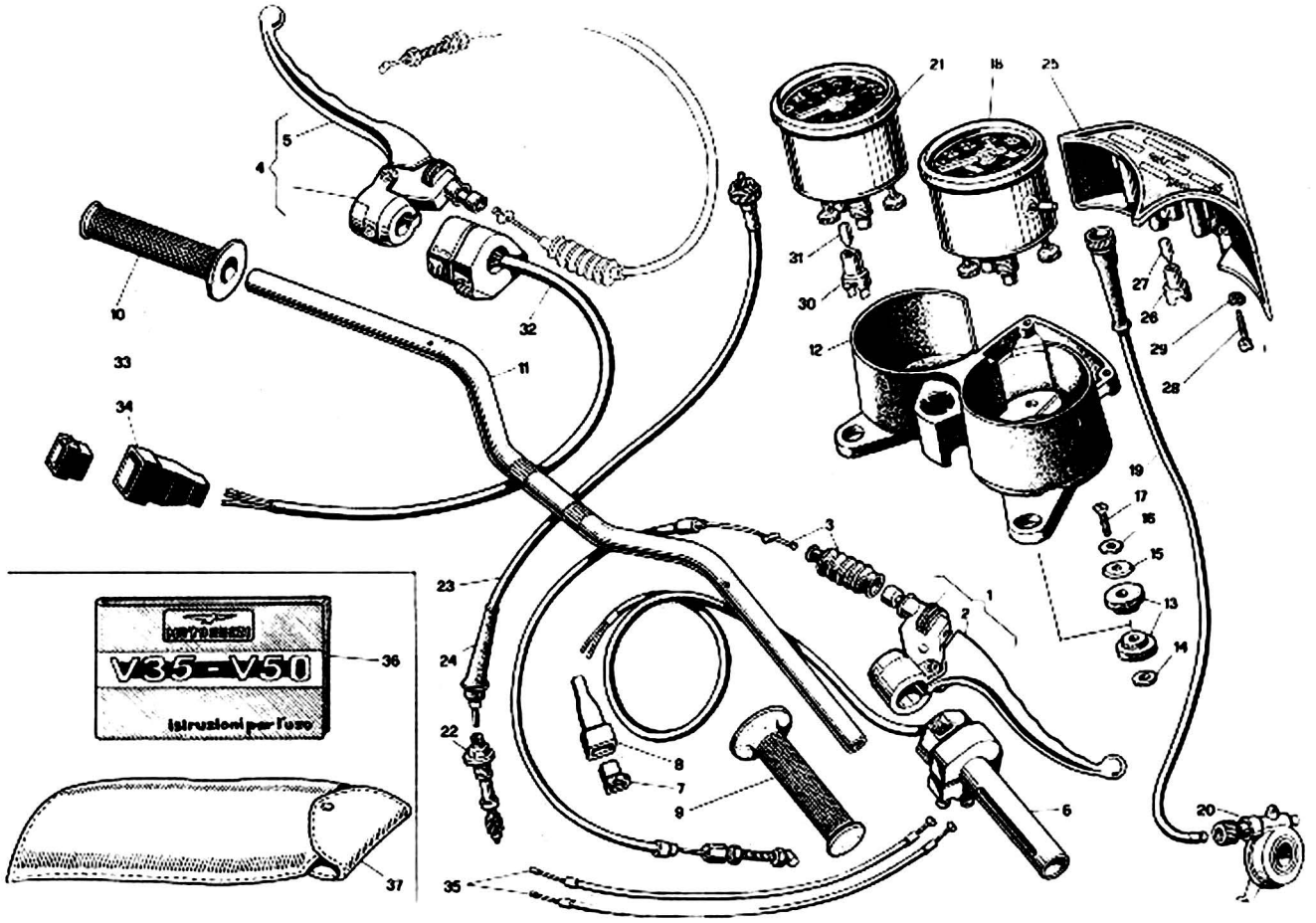

NOTE NOTES NOTES MARKE	POS. N.	N. COD. CODE No. Nr. CODE CODE Nr.	Q.tà Q.ty Q.té M.ge	DENOMINAZIONE	DESCRIPTION	DESIGNATION	BEZEICHNUNG
	1	19 60 54 00	1	Leva com. freno com.	Brake lever, compl.	Levier comm. frein c.	Bremsehebel, kpl.
	2	19 60 56 00	1	Leva nuda	Lever	Levier	Hebel
	3	19 62 54 51	1	Trasmiss. com. freni	Brake cable	Câble d'embrayage	Kupplungskabel
	4	19 60 55 01	1	Leva com. friz. compl.	Clutch lever, compl.	Levier d'embr. compl.	Kupplungshebel, kpl.
	5	14 60 57 50	1	Leva nuda	Lever	Levier	Hebel
	6	65 60 34 20	1	Impugnatura com. gas	Throttle control	Commande de gaz	Gasregelung
	7	61 74 05 50	1	Connettore a 3 vie	Connector	Connecteur	Verbinder
	8	17 75 58 00	1	Cappuccio	Cap	Capuchon	Kappe
	9	65 60 35 00	1	Manopola destra	R.H. hand grip	Poignée D	Handgriff R.
	10	65 60 30 00	1	Manopola sinistra	L.H. hand grip	Poignée G	Handgriff L.
	11	65 60 03 00	1	Manubrio	Handle bar	Guidon	Lenker
	12	19 50 15 00	1	Cruscotto portastrum.	Instrument panel	Tableau de bord	Instrumentbrett
	13	14 50 22 50	4	Elemento elastico	Rubber ring	Anneau en caoutch.	Gummiring
	14	95 00 42 15	2	Rondella inferiore	Lower washer	Rondelle inférieure	Unterscheibe
	15	95 09 01 42	2	Rondella superiore	Upper washer	Rondelle supérieure	Oberscheibe
	16	18 57 78 50	2	Rondella esterna	Outside washer	Rondelle extérieure	Aussenscheibe
	17	98 27 06 27	2	Vite	Screw	Vis	Schraube
	18	19 76 15 00	1	Tachimetro contakm.	Speedometer - Km.ind.	Tachym. - Compt. km.	Tachometer - Km Zähler
	19	19 76 04 00	1	Trasmissione contakm.	Km. indicator cable	Câble compt. km.	Km. Zählerkabel
	20	39 76 25 01	1	Rinvio compl.	Transmission compl.	Transmission compl.	Vorgelege, kpl.
●	21	19 76 72 00	1	Contagiri	Rev. counter	Compte-tours	Drehzahlmesser
	22	14 76 92 00	1	Bussola e pignone (Z = 14)	Bush and pinion (Z = 14)	Douille et pignon (Z = 14)	Buchse und Tachoritzel (Z = 14)
	23	19 76 81 00	1	Trasmiss. contagiri	Rev. counter cable.	Câble compte-tours	Drehzahlmesserkabel
	24	17 76 22 00	2	Guaina	Hose	Gaine	Schutzschlauch
	25	14 76 69 50	1	Supporto con gemme	Support with name	Support avec emblème	Halter mit Schild
	26	14 76 86 51	5	Portalampade	Lamp socket	Douille d'ampoule	Glühlampenfassung
	27	93 45 01 40	5	Lampadine spie (12 V - 1,2 W)	Pilot light (12 V - 1.2 W)	Témoin (12 V - 1,2 W)	Anzeigelicht (12 V - 1,2 W)
	28	98 83 02 25	2	Vite	Screw	Vis	Schraube
	29	95 02 11 05	2	Rondella	Washer	Rondelle	Unterlegscheibe
	30	17 76 06 50	2	Portampada	Lamp socket	Douille d'ampoule	Glühlampenfassung
	31	17 76 21 50	2	Lampada (12V - 3W)	Lamp (12V - 3W)	Ampoule (12V 3W)	Lampe (12V - 3W)
	32	65 73 80 20	1	Dispos. com. avvis. ac.	Horn control	Dispos. comm. av. ac.	Hupevorrichtung

Seimm Moto Guzzi - 22054 Mandello del Lario (Co) - Tel. 731112 - 732512 - Tx: 38095 - 6/77 - 2500 K Printed in Italy

Dati indicativi soggetti a modifiche senza impegno di preavviso - All data are subject to modification without notice Scanzorosciate (Bg)

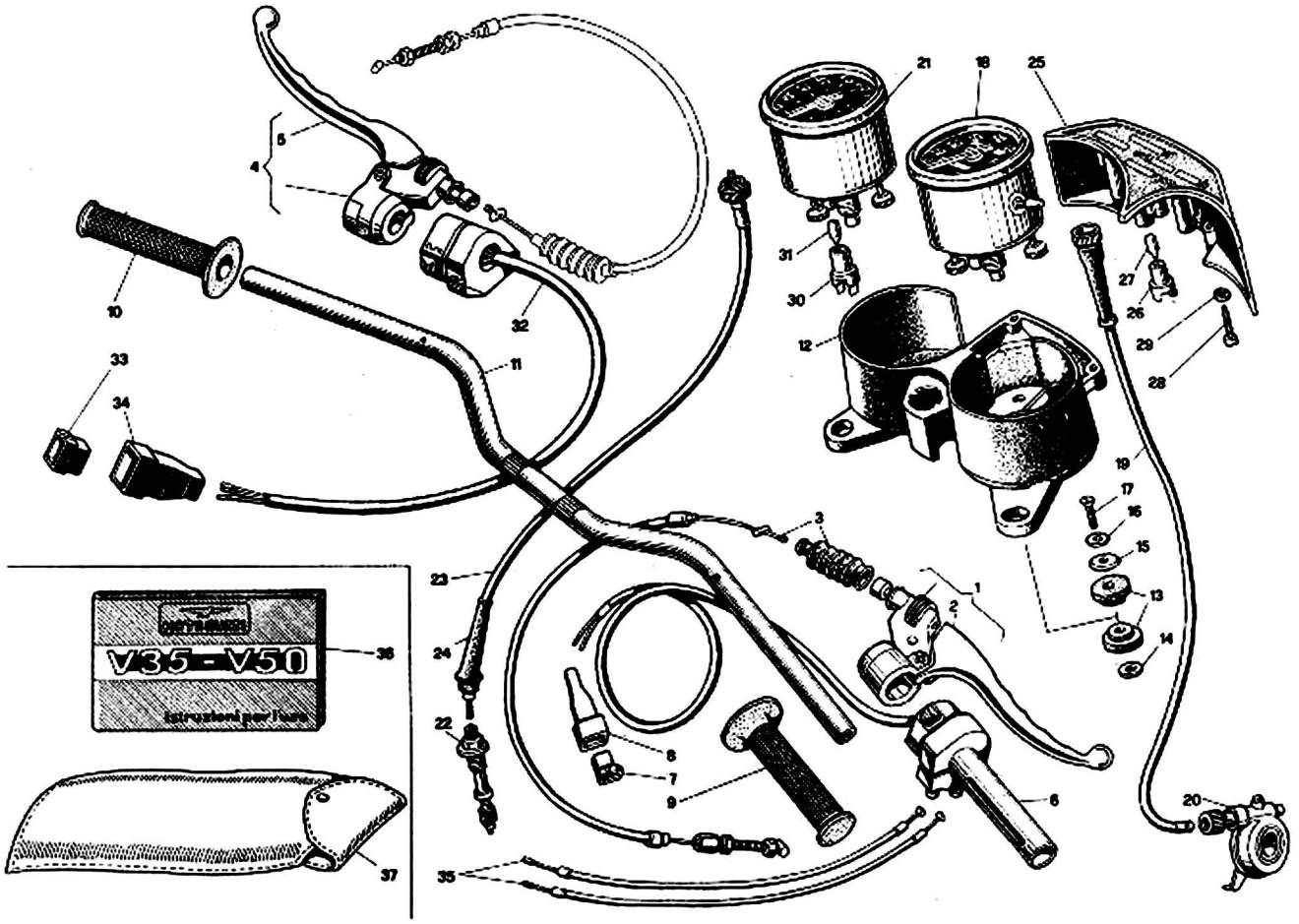

NOTE NOTES NOTES MARKE	POS. N.	N. COD. CODE No. Nr. CODE CODE Nr.	Q.tà Q.ty Q.té M.ge	DENOMINAZIONE	DESCRIPTION	DESIGNATION	BEZEICHNUNG
	33	61 74 05 51	1	Connettore 12 vie	Connector	Connecteur	Verbinder
	34	17 75 57 00	1	Cappuccio	Cap	Capuchon	Kappe
	35	19 11 75 50	2	Trasmiss. com. gas	Gas cable	Câble de gaz	Geskabel
	36	19 90 00 50	1	Libretto istruz. (I)	Rider's handbook (I)	Manuel d'entretien (I)	Betriebsanleitung (I)
	36	19 90 00 01	1	Libretto istruz. (GB)	Rider's handbook (GB)	Manuel d'entret. (GB)	Betriebsanleitung (GB)
	36	19 90 00 02	1	Libretto istruz. (F)	Rider's handbook (F)	Manuel d'entret. (F)	Betriebsanleitung (F)
	37	19 92 99 00	1	Dotazione complets	Complete equipment	Equipement compl.	Ausrüstung, kpl.

● **Varianti per modello V50**
Modifications for V50 model
Variantes pour modèle V50
Umänderungen für Modell V50

	21	14 76 72 50	1	Contagiri	Rev. counter	Compte-tours	Drehzahlmesser

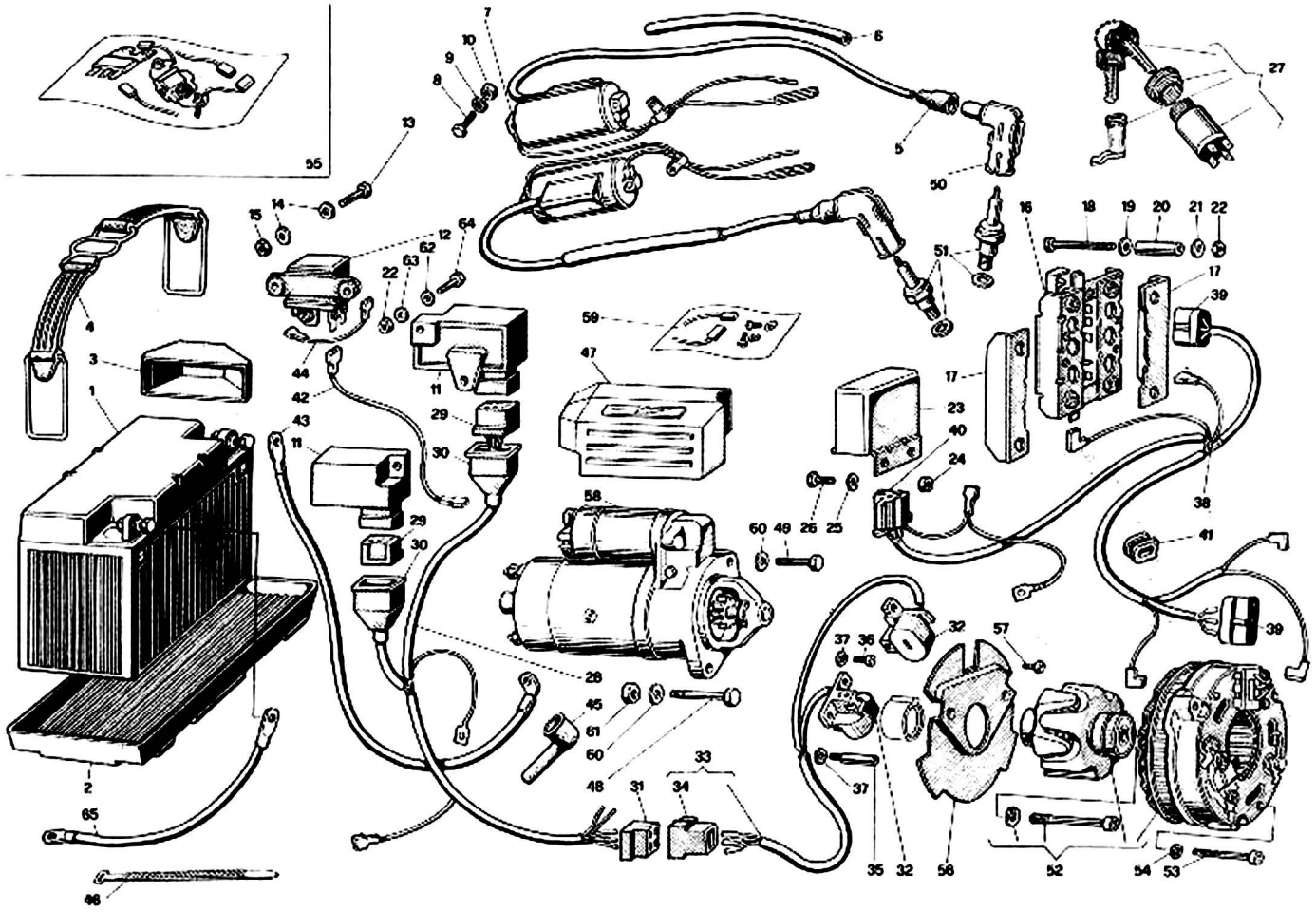

NOTE NOTES NOTES MARKE	POS. N.	N. COD. CODE No. Nr. CODE CODE Nr.	Q.tà Q.ty Q.tè M.ge	DENOMINAZIONE	DESCRIPTION	DESIGNATION	BEZEICHNUNG
	1	14 70 45 05	1	Accumulatore 12V-32Ah (a richiesta)	Battery 12 V - 32 Ah (optional)	Batterie 12 V - 32 Ah (sur demande)	Batterie 12 V - 32 Ah (auf Wunsch)
	1	14 70 45 50	1	Accumulatore 12V-20Ah	Battery 12 V - 20 Ah	Batterie 12 V - 20 Ah	Batterie 12 V - 20 Ah
	2	14 70 70 00	1	Vaschetta	Battery holder	Plateau de batterie	Batterieplatte
	3	14 70 53 50	1	Cuneo ancor. accum.	Wedge	Coin	Keil
	4	19 70 48 00	1	Staffa fiss. accum.	Flexible clamp	Collier élastique	Elast. Klammer
	5	14 71 76 00	2	Cappuccio protez.	Protective cap	Chapeau de protection	Schutzhülse
	6	19 71 86 00	2	Guaina per filo can.	Sheath	Gaine	Schutzhülle
	7	19 71 65 00	2	Bobina d'accensione	Ignition coil	Bobine d'allumage	Zündspule
	8	98 05 22 20	4	Vite	Screw	Vis	Schraube
	9	95 12 91 00	4	Rondella ondulata	Washer	Rondelle	Unterlegscheibe
	10	92 60 22 05	4	Dado	Nut	Ecrou	Mutter
	11	19 72 14 00	2	Centralina elettronica	Electronic gearbox	Centrale électronique	Elektronischezentrale
	12	12 73 25 00	1	Teleruttore avviam.	Relay	Relais	Relais
	13	98 05 42 12	2	Vite	Screw	Vis	Schraube
	14	95 10 00 59	4	Rondella	Washer	Rondelle	Unterlegscheibe
	15	92 60 22 05	2	Dado	Nut	Ecrou	Mutter
	16	17 70 43 00	1	Raddrizzatore Bosch	Rectifier Bosch	Redresseur Bosch	Gleichrichter Bosch
	17	14 70 42 05	2	Coperchio isolante	Cover	Couvercle	Deckel
	18	98 05 22 45	4	Vite	Screw	Vis	Schraube
	19	95 10 01 41	4	Rondella piana	Washer	Rondelle	Unterlegscheibe
	20	91 18 06 27	4	Tubetto distanziale	Spacer pipe	Tuyau entretoise	Distanzstückrohr
	21	95 12 91 00	4	Rondella ondulata	Washer	Rondelle	Unterlegscheibe
	22	92 60 22 05	8	Dado	Nut	Ecrou	Mutter
	23	17 70 38 00	1	Regolatore Bosch	Regulator Bosch	Régulateur Bosch	Spannungsregler Bosch
	24	91 18 06 05	2	Distanziale	Spacer	Entretoise	Distanzstück
	25	95 12 91 00	2	Rondella ondulata	Washer	Rondelle	Unterlegscheibe
	26	98 05 42 14	2	Vite	Screw	Vis	Schraube
	27	19 73 68 00	1	Commutatore d'accen. e serratura tappo olio	Ignition switch and oil plug lock	Contacteur d'allum. et serrure bouc. d'huile	Zündschalter und Oistopfenschluss
	28	19 72 21 00	1	Gruppo cavi acc. elettr.	Cable kit	Kit de câbles	Kabelsatz
	29	19 72 17 00	2	Blocchetto	Block	Bloc	Block
	30	19 72 15 00	2	Cappuccio di protez.	Protective cap	Chapeau de protection	Schutzhülse
	31	17 75 62 00	1	Connettore a 4 vie F	Connector	Branchement	Steckdose
	32	63 72 16 00	2	Captatore magnetico	Magn. picking up	Captateur magnétique	Magn. Fang
	33	19 72 22 00	1	Cablaggio compl.	Wire assembly	Groupe de fils	Kabelsatz

Dati indicativi soggetti a modifiche senza impegno di preavviso All data are subject to modification without notice - Scanzorosciate (Bg)

V35-V50	ACCENSIONE IGNITION ALLUMAGE ZÜNDUNG		SEIMM MOTO GUZZI
Tavola - Drawing Table - Bild **18**			

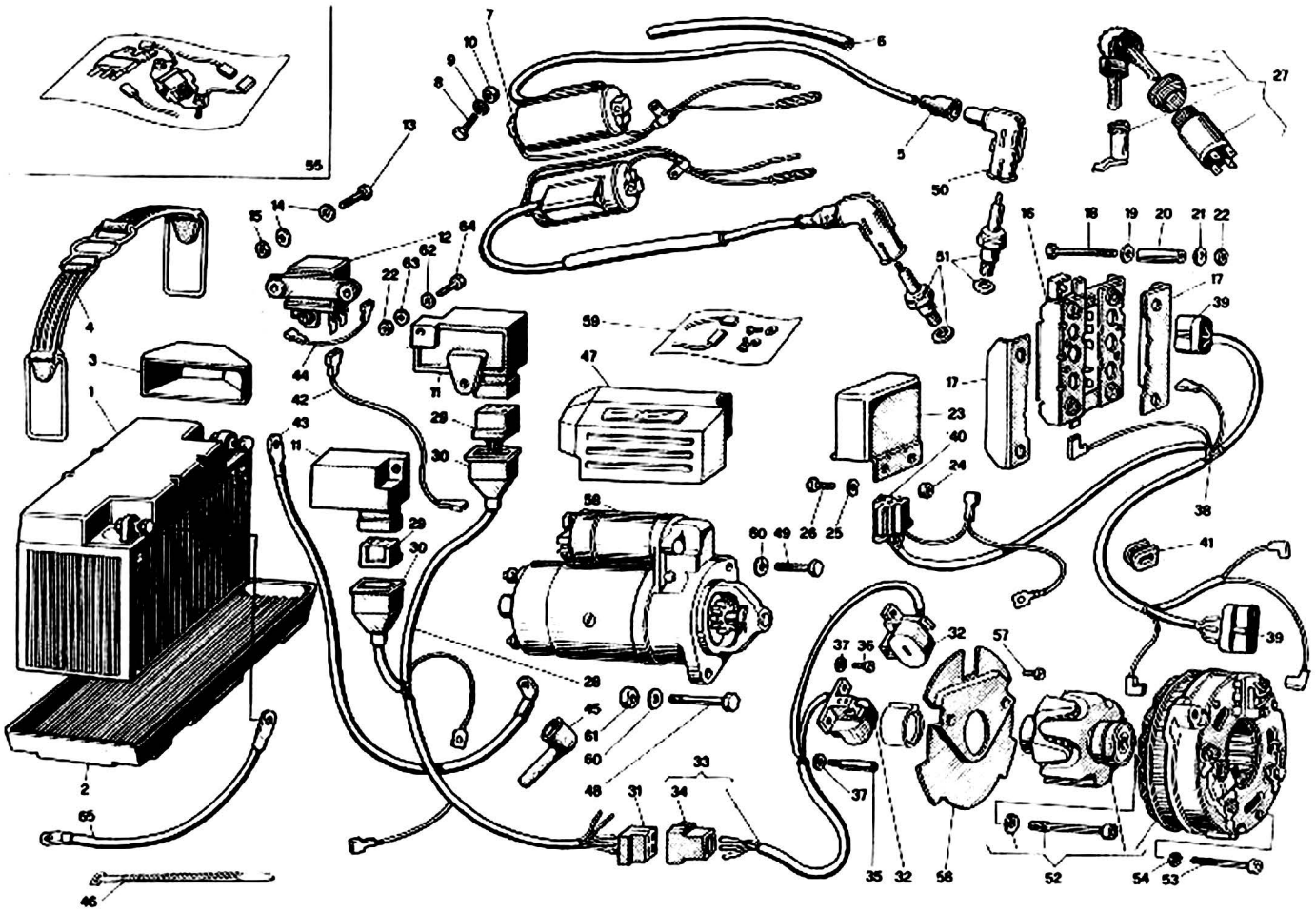

NOTE NOTES NOTES MARKE	POS. N.	N. COD. CODE No. Nr. CODE CODE Nr.	Q.tà Q.ty Q.té M.ge	DENOMINAZIONE	DESCRIPTION	DESIGNATION	BEZEICHNUNG
	34	17 73 63 00	1	Connettore a 4 vie M	Connector	Branchement	Steckdose
	35	19 72 26 00	2	Colonnetta	Support	Support	Halter
	36	98 20 25 10	2	Vite	Screw	Vis	Schraube
	37	95 02 11 05	4	Rondella elast. dentel.	Washer	Rondelle	Unterlegscheibe
	38	19 74 74 00	1	Gruppo cavi alter.	Wire assembly	Groupe de fils	Kabelsatz
	39	61 71 25 00	2	Connettore a 3 vie	Connector	Branchement	Steckdose
	40	61 71 26 00	1	Connettore a 3 vié	Connector	Branchement	Steckdose
	41	19 00 77 00	1	Gommino passacavi	Rubber block	Caoutchouc	Gummistück
	42	19 74 82 00	1	Cavo coll. tel.	Cable	Câble	Kabel
	43	19 74 80 00	1	Cavo dalla batt. al m.	Cable	Câble	Kabel
	44	19 74 83 00	1	Cavo da cont. del tel.	Cable	Câble	Kabel
	45	19 70 71 00	2	Cappuccio	Cap	Capuchon	Kappe
	46	14 60 96 50	10	Fascetta tenuta cavi	Clamp	Collier	Schelle
	46	13 60 96 60	10	Fascetta tenuta cavi	Clamp	Collier	Schelle
	47	19 73 33 50	1	Protezione	Protection	Protection	Schutz
	48	98 05 24 40	1	Vite	Screw	Vis	Schraube
	49	98 05 24 35	1	Vite	Screw	Vis	Schraube
	50	14 71 74 00	2	Attacco per cavo can.	Spark plug cap	Embout de bougie	Zündkerzenstecker
	51	19 71 70 00	2	Candela (Champion N6Y)	Spark plug (Champion N6Y)	Bougie (Champion N6Y)	Zündkerze (Champion N6Y)
	51	19 71 70 01	2	Candela (Marelli CW 9 PL)	Spark plug (Marelli CW 9 PL)	Bougie (Marelli CW 9 PL)	Zündkerze (Marelli CW 9 PL)
	51	19 71 70 02	2	Candela (Bosch W 260 T30)	Spark plug (Bosch W 260 T30)	Bougie (Bosch W 260 T30)	Zündkerze (Bosch W 260 T30)
	51	19 71 70 03	2	Candela (Lodge 2HLN)	Spark plug (Lodge 2HLN)	Bougie (Lodge 2HLN)	Zündkerze (Lodge 2HLN)
	52	17 71 24 00	1	Generatore 14V - 20/21 A	Generator 14V - 20/21 A	Générateur 14V - 20/21 A	Stromgenerator 14V - 20/21 A
	53	98 62 02 45	3	Vite	Screw	Vis	Schraube
	54	95 02 11 05	3	Rosetta elastica	Spring washer	Rondelle élastique	Federscheibe
	55	17 71 99 00	1	Serie revis. generat.	Generator kit	Kit de générateur	Stromgenerator - Rep.-Satz
	56	19 72 25 00	1	Protezione captat.	Protection	Protection	Schutz
	57	98 28 04 12	2	Vite	Screw	Vis	Schraube
	58	14 73 07 06	1	Motorino avviamento	Starter	Démarreur	Anlassmotor
	59	14 73 05 70	1	Gruppo rev. motorino	Starter kit	Kit de démarreur	Anlassmotor - Rep.-Satz
	60	95 00 42 08	2	Rosetta	Washer	Rondelle	Unterlegscheibe

Seimm Moto Guzzi - 22054 Mandello del Lario (Co) - Tel. 731112 - 732512 - Tx: 38095 - 6/77 - 2500 K Printed in Italy

Dati indicativi soggetti a modifiche senza impegno di preavviso - All data are subject to modification without notice - Scanzorosciate (Bg)

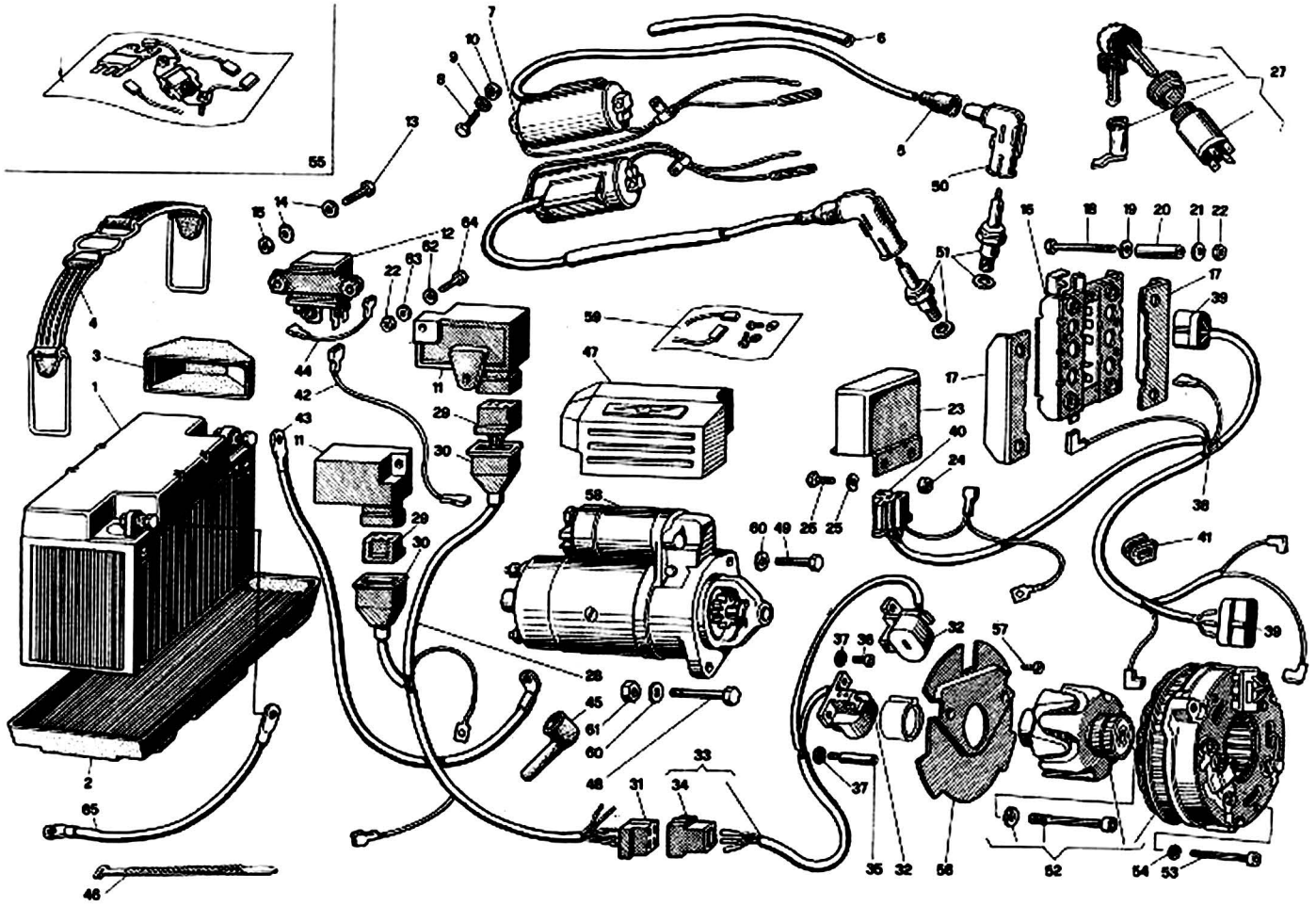

NOTE NOTES NOTES MARKE	POS. N.	N. COD. CODE No. Nr. CODE CODE Nr.	Q.tà Q.ty Q.té M.ge	DENOMINAZIONE	DESCRIPTION	DESIGNATION	BEZEICHNUNG
	61	92 60 22 08	1	Dado	Nut	Ecrou	Mutter
	62	95 00 42 05	2	Rondella superiore	Upper washer	Rondelle supér.	Oberscheibe
	63	95 10 00 59	6	Rondella	Washer	Rondelle	Unterlegscheibe
	64	98 05 42 16	4	Vite	Screw	Vis	Schraube
	65	19 74 84 00	1	Cavo da batt. a massa	Cable	Câble	Kabel

Dati indicativi soggetti a modifiche senza impegno di preavviso All data are subject to modification without notice - Scanzorosciate (Bg)

V35	ACCENSIONE IGNITION ALLUMAGE ZÜNDUNG	Solo per V35 - Motorino avv. Bendix For V35 mod. only - Starter Bendix Seulement pour V35 - Démarreur Bendix Nur für V35 Modell - Anlassmotor Bendix	SEIMM MOTO GUZZI
Tavola - Drawing Table - Bild **18A**			

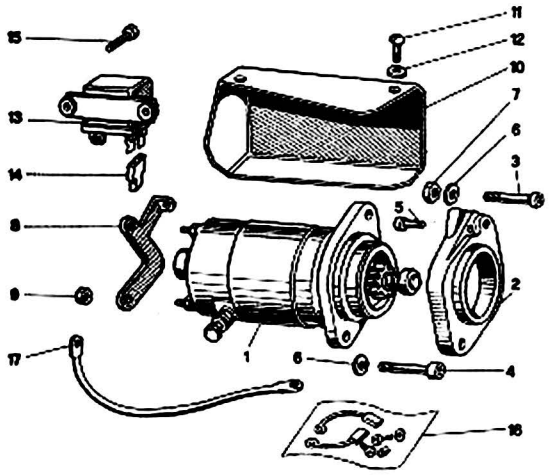

NOTE NOTES NOTES MARKE	POS. N.	N. COD. CODE No. Nr. CODE CODE Nr.	Q.tà Q.ty Q.tè M.ge	DENOMINAZIONE	DESCRIPTION	DESIGNATION	BEZEICHNUNG
	1	*	1	Motorino avv. Bendix	Starter Bendix	Démarreur Bendix	Anlassmotor Bendix
	2	14 73 18 06	1	Piastra per motorino	Plate	Plaque	Platte
	3	98 82 04 50	1	Vite	Screw	Vis	Schraube
	4	98 82 04 35	1	Vite	Screw	Vis	Schraube
	5	98 82 24 20	1	Vite	Screw	Vis	Schraube
	6	95 00 42 08	2	Rosetta	Washer	Rondelle	Unterlegscheibe
	7	92 60 22 08	2	Dado	Nut	Ecrou	Mutter
	8	19 73 38 00	1	Sostegno prot. motor.	Support	Support	Haltar
	9	92 63 01 05	2	Dado	Nut	Ecrou	Mutter
	10	19 73 32 00	1	Protezione	Protection	Protection	Schutz
	11	98 31 06 12	2	Vite	Screw	Vis	Schraube
	12	95 00 42 06	2	Rondella	Washer	Rondelle	Unterlegscheibe
	13	14 70 76 05	1	Teleruttore avviam.	Relay	Relais	Relais
	14	93 40 08 63	2	Faston maschio	Male "faston"	"Faston" mâle	Zapfen "Faston"
	15	98 05 22 20	2	Vite	Screw	Vis	Schraube
	16	14 73 05 71	1	Gruppo rev. motor.	Starter kit	Kit de démarreur	Anlassmotor Rep.-Satz
	17	19 74 84 00	3	Cavo per batt. teler.	Cable	Câble	Kabel

*** Il motorino avviamento Bendix non viene fornito a ricambio; in sostituzione viene fornito il motorino N. 14 73 07 06, da montarsi con i componenti previsti su tavola 18 - Pos. 12 - 42 - 43 - 44 - 47 - 48 - 49**
Starter Bendix is not available as spare parts; starter No. 14 73 07 06 is supplied on its place and it must be assembled with items indicated on drawing 18 - Pos. No. 12 - 42 - 43 - 44 - 47 - 48 - 49
Le démarreur Bendix n'est pas disponible comme pièce détachée; le démarreur Nr. 14 73 07 06 est fourni à sa place et il doit être assemblé avec les pièces indiquées sur la table 18 - Nr. Pos. 42 - 43 - 44 - 47 - 48 - 49
Anlassmotor Bendix wird nicht als Ersatzteil geliefert; an seiner Stelle wird jetzt der Anlassmotor Nr. 14 73 07 06 geliefert, der mit den auf Bild 18 Positionnummern 12 - 42 - 43 - 44 - 47 - 48 - 49 gezeichneten Teilen aufgebaut werden muss.

Seimm Moto Guzzi - 22054 Mandello del Lario (Co) Tel. 731112 - 732512 - Tx: 38095 - 6/77 - 2500 K Printed in Italy

Dati indicativi soggetti a modifiche senza impegno di preavviso - All data are subject to modification without notice Stabilimenti Grafici Scanzorosciate (Bg)

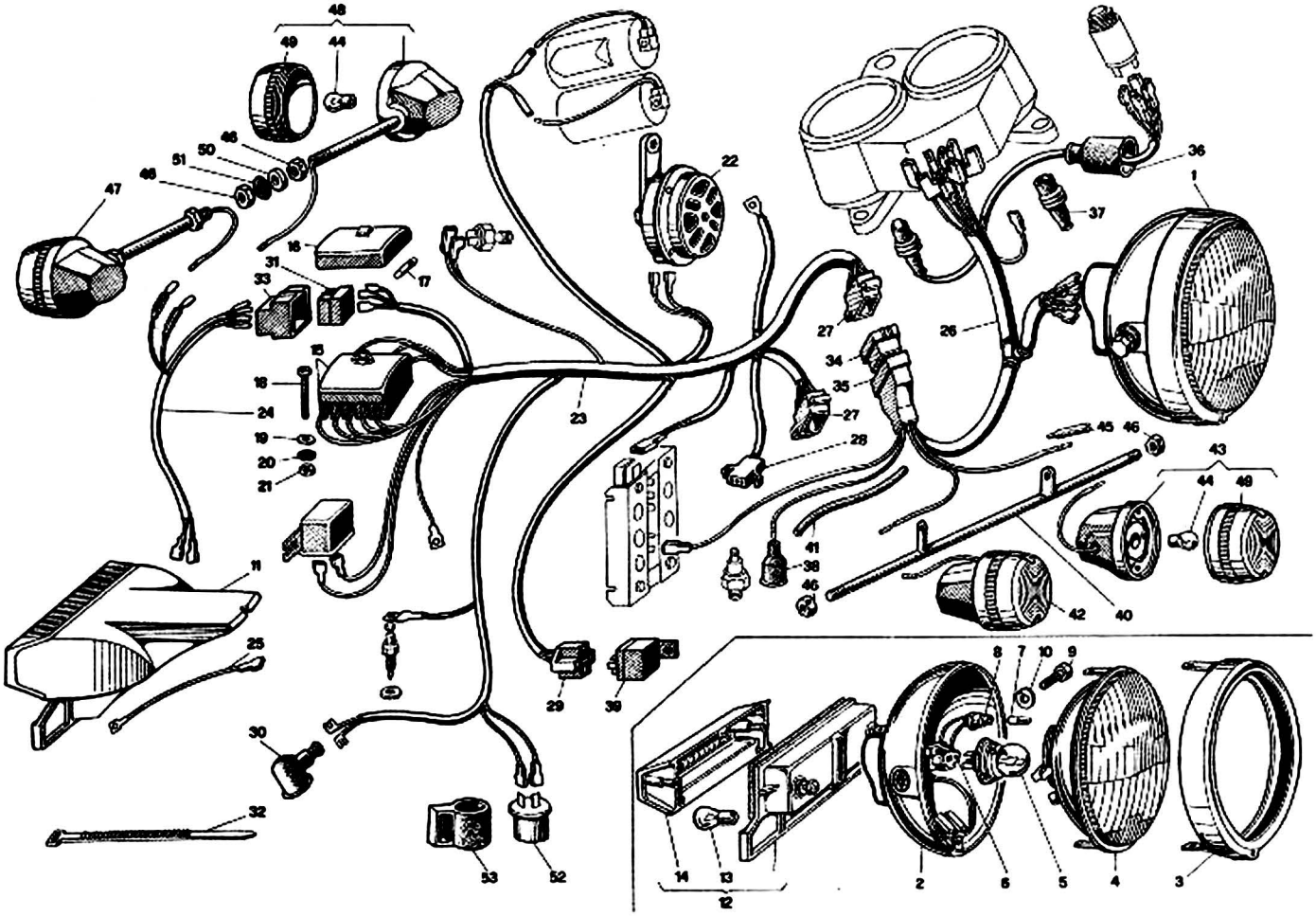

NOTE NOTES NOTES MARKE	POS. N.	N. COD. CODE No. Nr. CODE CODE Nr.	Q.tà Q.ty Q.té M.ge	DENOMINAZIONE	DESCRIPTION	DESIGNATION	BEZEICHNUNG
	1	14 74 05 50	1	Proiettore anter.	Headlight	Projecteur AV	Vord. Scheinwerfer
	2	14 74 04 58	1	Calotta	Body	Boitier	Gehäuse
	3	14 74 04 56	1	Ghiera nero opaco	Mat black ring nut	Embout noir opaque	Opakschwarz Haltering
	4	14 74 04 55	1	Gruppo ottico	Head lamp	Optique de phare	Scheinwerfer Einsatz
	5	93 45 02 31	1	Lampada a sfera 40/45 W - 12 V	Bulb 40/45 W - 12 V	Ampoule 40/45 W - 12 V	Glühlampe 40/45 W - 12 V
	6	17 74 04 01	1	Zoccolo presa corrente	Socket	Douille	Anschluss-stecker
	7	93 45 01 19	1	Lampada luce città 3W - 12V	Lamp 3W - 12V	Lampe 3W - 12V	Lampe 3W - 12V
	8	17 74 04 05	1	Portalampada con cavo	Socket	Douille d'ampoule	Lampenfassung
	9	14 74 03 55	2	Vite	Screw	Vis	Schraube
	10	14 74 03 56	2	Rosetta	Washer	Rondelle	Unterlegscheibe
	11	19 74 09 00	1	Fanalino poster. comp.	Back light, compl.	Lanterne AR compl.	Rücklicht, kpl.
	12	65 74 09 00	1	Fanalino poster.	Back light	Lanterne AR	Rücklicht
	13	93 45 02 23	2	Lampada	Lamp	Lampe	Lampe
	14	65 74 17 00	1	Coppetta per fanalino	Cap	Capuchon	Kappe
	15	19 74 30 00	1	Morsettiera portafusib.	Fuse box	Boite de fusibles	Sicherungsdose
	16	19 74 31 00	1	Coperchio morsett.	Cover	Couvercle	Deckel
	17	17 74 25 50	6	Fusibile (16 A)	Fuse (16 A)	Fusible (16 A)	Schmelzeinsatz (16 A)
	18	98 20 25 30	2	Vite	Screw	Vis	Schraube
	19	95 00 02 05	2	Rondella piana	Washer	Rondelle	Unterlegscheibe
	20	95 02 11 05	2	Rondella dentellata	Washer	Rondelle	Unterlegscheibe
	21	92 60 22 05	2	Dado	Nut	Ecrou	Mutter
	22	14 74 37 00	1	Avvisatore acustico	Horn	Avertisseur acoust.	Hupe
	23	19 74 71 00	1	Gruppo princ. cavi	Cable kit	Kit de câbles	Kabelsatz
	24	19 74 73 00	1	Gruppo cavi	Cable kit	Kit de câbles	Kabelsatz
	25	14 74 81 00	1	Cavo massa	Earthing cable	Fil de masse	Massband
	26	19 74 72 00	1	Gruppo cavi	Cable kit	Kit de câbles	Kabelsatz
	27	19 72 31 00	2	Connettore 12 vie f.	Connector	Branchement	Steckdose
	28	19 72 30 00	1	Connettore 3 vie fem.	Connector	Branchement	Steckdose
	29	19 73 24 00	1	Presa pentapolare	Coupling	Prise	Gang
	30	12 73 51 00	1	Cappuccio per inter.	Cap	Capuchon	Kappe
	31	17 75 62 00	1	Connettore 4 vie mas.	Connector	Branchement	Steckdose
	32	49 60 96 00	2	Fascetta	Clamp	Collier	Schelle
	33	17 73 63 00	1	Connettore 4 vie fem.	Connector	Branchement	Steckdose
	34	61 74 05 51	1	Connettore 12 vie mas.	Connector	Branchement	Steckdose
	35	17 75 57 00	1	Cappuccio connettore	Cap	Capuchon	Kappe

Seimm Moto Guzzi - 22054 Mandello del Lario (Co) - Tel. 731112 - 732512 - Tx: 38095 - 6/77 - 2500 K Printed in Italy

Dati indicativi soggetti a modifiche senza impegno di preavviso - All data are subject to modification without notice Bieffedi Scanzorociate (Bg)

V35-V50	ILLUMINAZIONE LIGHTING SIGNALS LUMINEUX BELEUCHTUNG		SEIMM MOTO GUZZI
Tavola - Drawing Table - Bild 19			

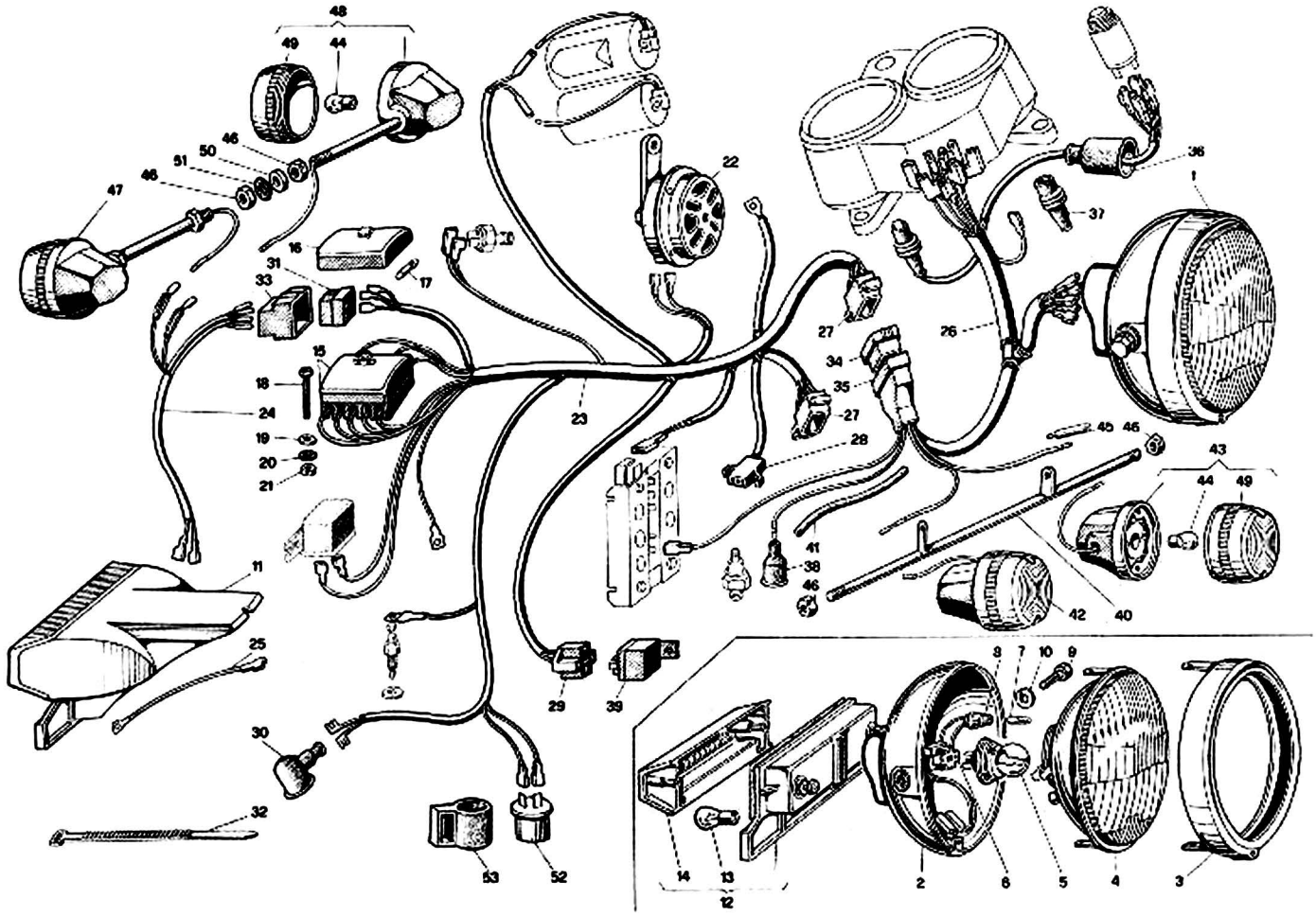

NOTE NOTES NOTES MARKE	POS. N.	N. COD. CODE No. Nr. CODE CODE Nr.	Q.tà Q.ty Q.tè M.ge	DENOMINAZIONE	DESCRIPTION	DESIGNATION	BEZEICHNUNG
	36	25 74 13 25	1	Cappuccio protez.	Protective cap	Chapeau de protect.	Schutzhülse
	37	17 75 53 00	2	Cappuccio protez.	Protective cap	Chapeau de protect.	Schutzhülse
	38	12 71 76 00	1	Cappuccio per trasm.	Cap	Chapeau	Kappe
	39	19 73 25 00	1	Teleruttore 12V	Relay 12V	Relais 12V	Relais 12V
	40	19 75 13 00	1	Supp. anter. ind. dir.	Fr. indic. support	Support clignot. AV	Vorderblinker Halter
	41	19 75 08 00	1	Guaina per cavo	Hose	Gaine	Hülse
	42	14 75 06 50	1	Indicatore destro	R.H. indicator	Clignotant D	Blinker, R.
	43	14 75 06 51	1	Indicatore sinistro	L.H. indicator	Clignotant G	Blinker, L.
	44	93 45 01 29	4	Lampada 12V - 21W	Lamp 12V - 21W	Lampe 12V - 21W	Lampe 12V - 21W
	45	93 43 03 07	1	Guaina cavo lampeg. sinistro (verde)	L.H. blinker cable hose (green)	Gaine câble clignot. G (vert)	Blinkerkabel, L. Hülse (grün)
	46	92 60 24 11	4	Dado	Nut	Ecrou	Mutter
	47	18 75 06 57	1	Indicat. poster. destro	R.H. rear indicator	Clignotant AR D	Hint. Blinker, R.
	48	18 75 06 56	1	Indicat. poster. sin.	L.H. rear indicator	Clignotant AR G	Hint. Blinker, L.
	49	18 74 37 60	4	Coppetta per fanalino	Cap	Capuchon	Kappe
	50	14 75 34 50	2	Distanziale	Spacer	Entretoise	Distanzstück
	51	95 02 11 10	2	Rondella dentellata	Washer	Rondelle	Unterlegscheibe
	52	17 75 05 20	1	Intermittenza	Intermittence	Centrale clignotants	Intermittenz
	53	17 75 12 00	1	Supporto elastico	Flexible support	Support élastique	Elast. Halter

Dati indicativi soggetti a modifiche senza impegno di preavviso All data are subject to modification without notice Scanzorosciate (Bg)

TAVOLA - DRAWING TABLE - BILD 1

BASAMENTO E COPERCHI · CRANKCASE & COVERS
CARTER MOTEUR · COUVERCLES · KURBELGEH. · DECKEL

–	19 99 10 00	1	Motore compl. carbur.	Engine with carbur.	Moteur avec carbur.	Motor with Vergaser
–	19 99 14 00	1	Motore e cambio com.	Engine & transm. com.	Moteur et boite à vit.	Motor und Schaltg.

TAVOLA - DRAWING TABLE - BILD 2

TESTA E CILINDRO · HEAD AND CYLINDER
CULASSE ET CYLINDRE · KOPF UND ZYLINDER

1	19 02 21 00	1	Testa destra compl.	R.H. cylinder head c.	Culasse D compl.	Zylinderkopf R. kpl..
2	19 02 22 00	1	Testa sinistra compl.	L.H. cylinder head c.	Culasse G compl.	Zylinderkopf L. kpl.
26	19 11 50 00	1	Pipa aspirazione destra	R.H. manifold	Pipe D	Ansaugkrümmer, R.
27	19 11 50 01	1	Pipa aspirazione sin.	L.H. manifold	Pipe G	Ansaugkrümmer, L.

TAVOLA - DRAWING TABLE - BILD 4

DISTRIBUZIONE · TIMING SYSTEM
DISTRIBUTION · STEUERUNG

1	19 03 60 00	2	Valvola aspirazione	Intake manifold	Soupape d'admission	Einlassventil
2	19 03 61 00	2	Valvola scarico	Exhaust valve	Soupape d'échapp.	Auslassventil

TAVOLA - DRAWING TABLE - BILD 5

ALIMENTAZIONE - SCARICO · FEEDING - EXHAUST
ALIMENTATION - ECHAPP. · ZUFÜHRUNG - AUSPUFF

1	19 11 26 00	1	Carbur. dx. VHB 20 F	R.H. carbur. VHB 20F	Carbur. D VHB 20 F	Vergaser R. VHB 20 F
2	19 11 26 01	1	Carbur. sx. VHB 20 F	L.H. carbur. VHB 20F	Carbur. G VHB 20 F	Vergaser L. VHB 20 F
72	61 93 49 40	1	Spillo conico	Needle	Pointeau conique	Kon. Nadel
90	39 93 57 01	1	Getto massimo	Main jet	Gicleur principal	Max. Vergasung

TAVOLA - DRAWING TABLE - BILD 7

FRIZIONE · CLUTCH
EMBRAYAGE · KUPPLUNG

43	19 21 11 05	1	Ingran. rinvio A.P. (Z = 25)	O.S. intermediate gear (Z = 25)	Engren. de renvoi A.P. (Z = 25)	Zahnradvorgel, H.W. (Z = 25)

TAVOLA - DRAWING TABLE - BILD 8

SCATOLA CAMBIO · TRANSMISSION CASE
CARTER DE BOITE A VIT. · GETRIEBEGEH.

–	19 99 15 00	1	Cambio completo e campana	Transmission assy and housing	Boite à vitesses compl. et carter	Schaltgetriebe, kpl. und Gehäuse

TAVOLA - DRAWING TABLE - BILD 9

CAMBIO · TRANSMISSION
BOITE A VITESSES · SCHALTGETRIEBE

57	19 21 11 06	1	Ingranaggio rinvio A.P. (Z = 25)	Idle gear M.S. (Z = 25)	Pignon intermédiaire A.P. (Z = 25)	Zahnradvorgelege An.W. (Z = 25)
		1	Specchietto retrovisore	Driving mirror	Rétroviseur	Rückblickspiegel

TAVOLA - DRAWING TABLE - BILD 12

TELAIO · FRAME
CHASSIS · RAHMEN

–	19 91 84 00	1	Targhetta identificaz.	Identification plate	Plaque d'identification	Schildchen
–	46 91 85 70	2	Ribattino	Rivet	Rivet	Niet

TAVOLA - DRAWING TABLE - BILD 17

STRUMENTAZ. - COMANDI · INSTR. PANEL - CONTROLS
TABL. DE BORD - COMM. · INSTRUMENTENBRETT - ANTR.

21	14 76 72 50	1	Contagiri	Rev. counter	Compte-tours	Drehzahlmesser
36	19 90 00 03	1	Libretto istruz. (D)	Rider's handbook (D)	Manuel d'entret. (D)	Betriebsanleitung (D)

Seimm Moto Guzzi · 22054 Mandello del Lario (Co) Tel. 731112 · 732512 · Tx: 38095 · 6/77 · 2500 K Printed in Italy

Dati indicativi soggetti a modifiche senza impegno di preavviso All data are subject to modification without notice Scanzorosciate (Bg)

VERSIONE ESTERO * EXPORT VERSION * VERSION EXPORT * AUSLAND AUSFUHRUNG * EXPORT UITVOERING * VERSIONE ESTERO * EXPORT VERSION * VERSION EXPORT

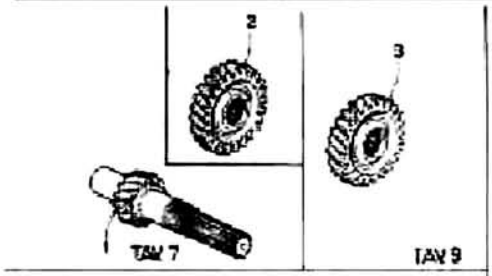

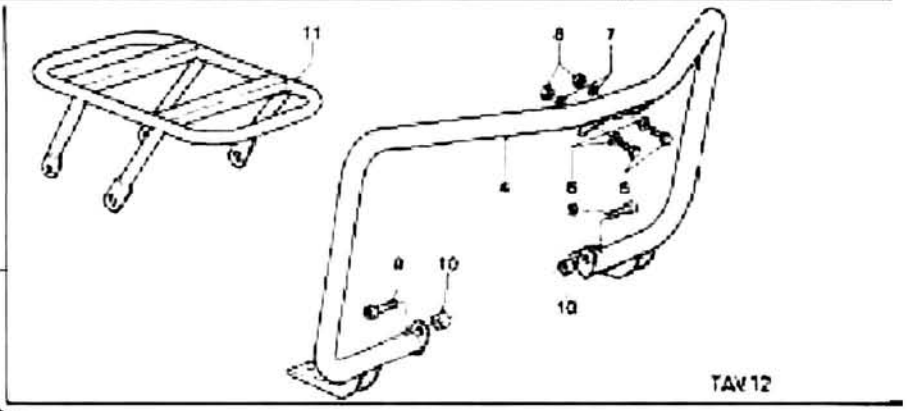

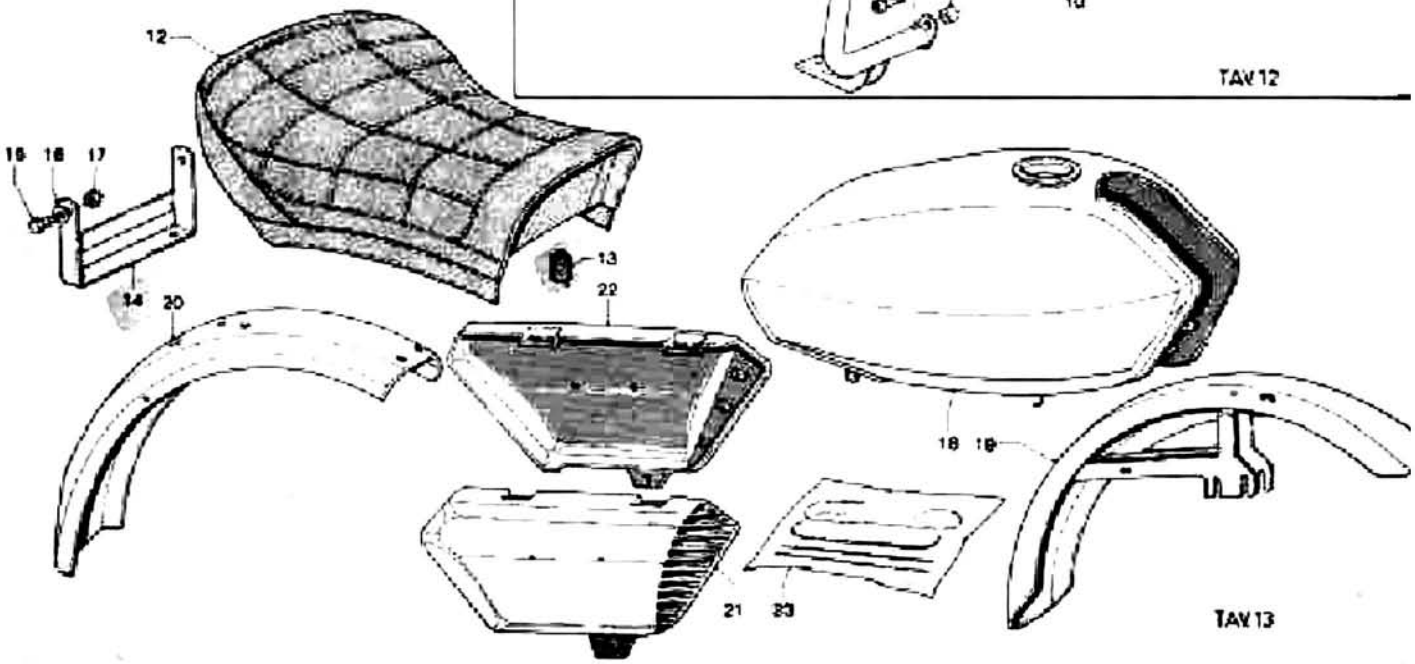

NOTE NOTES NOTES MARKE	POS N.	N. COD. CODE No. Nr CODE CODE Nr.	Q.tà Q.ty Q.té M.ge	DENOMINAZIONE	DESCRIPTION	DESIGNATION	BEZEICHNUNG
		TAVOLA 12 (seguito)					
	8	92 60 22 08	2	Dado	Nut	Ecrou	Mutter
	9	91 18 11 12	2	Distanziale per paraurti	Spacer	Entretoise	Distanzstück
	10	88 62 05 40	2	Vite inf. fiss. paraurti	Screw	Vis	Schraube
	11	19 46 88 90	1	Portapacchi compl.	Carrier, compl.	Porte-bagages, compl.	Gepäckhalter, kpl.
		TAVOLA 13					
	12	19 46 05 90	1	Sella monoposto	Saddle	Selle	Sattel
	13	19 46 16 90	2	Tampone per sella	Rubber ring	Disque en caoutchouc	Gummiring
	14	19 46 23 90	1	Cavalletto fiss. sella	U-bolt	Etrier	Schelle
	15	88 06 44 20	2	Vite fiss. sella	Screw	Vis	Schraube
	16	61 27 03 00	2	Rondella per vite	Washer	Rondelle	Unterlegscheibe
	17	92 63 01 08	2	Dado per vite	Nut	Ecrou	Mutter
*	18	19 10 02 50	1	Serbatoio verniciato	Fuel tank	Réservoir	Kraftstoffbehälter
*	19	19 43 43 00	1	Parafl. ant. verniciato	Front fender	Aile AV	Vord. Kotflügel
*	20	19 43 70 00	1	Parafl. post. verniciato	Rear fender	Aile AR	Hint. Kotflügel
*	21	19 47 62 50	1	Coperchio dx. verniciato senza marchio	R.H. cover without mark	Couvercle D sans marque	Deckel, R. - ohne Marke
*	22	19 47 63 50	1	Coperchio sx. verniciato senza marchio	L.H. cover without mark	Couvercle G sans marque	Deckel, L. - ohne Marke
	23	19 92 33 90	1	Serie decalcomanie	Moulding set	Kit de moulure	Abdeckleistensatz
	–	00 95 00 25	1	Kg. 1 vernice bianca	Kg. 1 paint (white)	Kg. 1 vernis (blanche)	Kg. 1 Lack (weiss)

* Vedi tabella particolari verniciati - See painted part list - Voir tableau pièces vernissées - Liste der Lackierten Teilen sehn

Moto Guzzi - 22054 Mandello del Lario (Co) - Tel. 731112 732512 - Tx 38095 - 12/77 - 1000 K - Printed in Italy

I dati riportati sono soggetti a modifiche senza impegno di preavviso - All data are subject to modification without notice

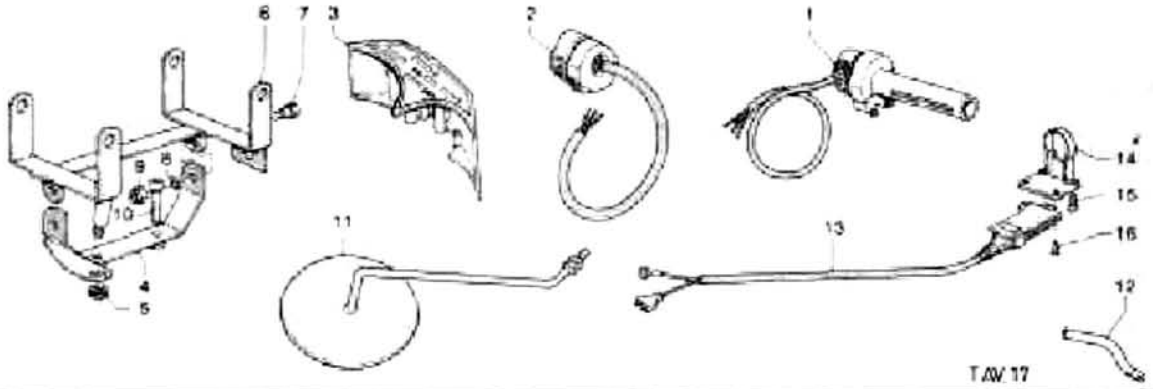

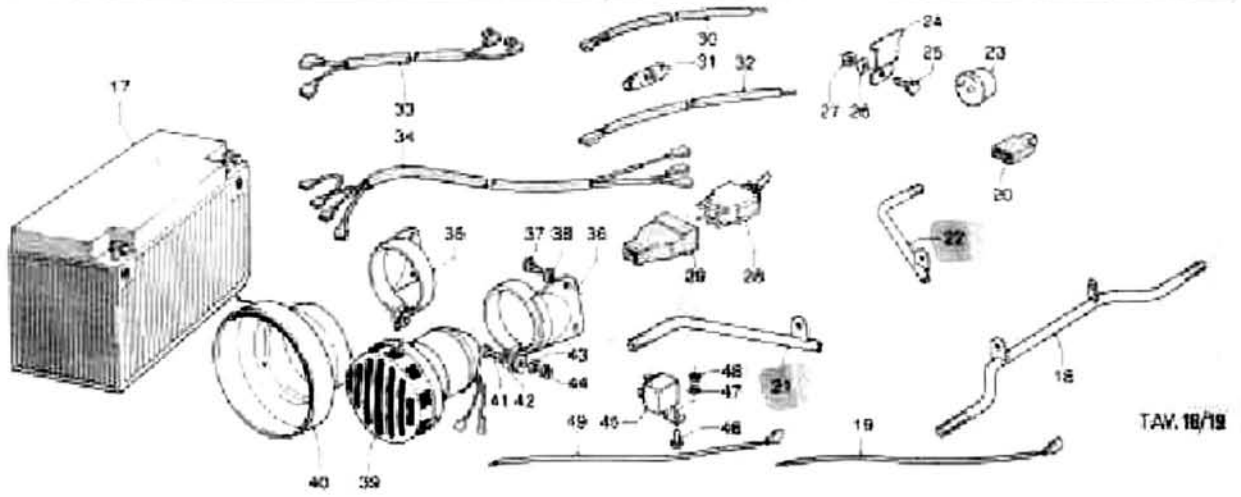

NOTE NOTES NOTES MARKE	POS. N.	N. COD. CODE No. Nr. CODE CODE Nr	Q.tà Q.ty Q.té Mge	DENOMINAZIONE	DESCRIPTION	DESIGNATION	BEZEICHNUNG
		TAVOLA 17					
	1	65 80 34 00	1	Impugnatura com. gas	Throttle control	Commande de gaz	Gasregelung
	2	19 76 69 00	1	Supporto gemme	Name support	Support emblème	Schildhalter
	3	65 73 80 00	1	Dispositivo ind. avvis.	Horn control	Dispos. comm. avis. ec.	Hupevorrichtung
	4	19 80 23 90	1	Supporto telecom. fisso	Support	Support	Halter
	5	91 65 10 85	1	Gommino	Rubber block	Caoutchouc	Gummistück
	6	19 80 28 90	1	Supp. telecom. mobile	Support	Support	Halter
	7	98 05 43 16	2	Vite per fodero	Screw	Vis	Schraube
	8	95 02 11 06	2	Rondella dentellata	Washer	Rondelle	Unterlegscheibe
	9	92 63 01 06	2	Dado autobloccante	Self-locking nut	Ecrou à autoblocage	Selbstklemmutter
	10	98 83 04 45	2	Vite fiss. tel.	Screw	Vis	Schraube
	11	14 76 98 50	1	Specchio retrovisivo	Driving mirror	Rétroviseur	Rückblickspiegel
	12	17 80 26 45	1	Attacco microtelefono	Support	Support	Halter
	13	19 75 63 90	1	Pulsante teleruttore	Push-botton, compl.	Poussoir compl.	Knopf, kpl.
	14	19 80 40 80	1	Supporto pulsante	Support	Support	Stütze
	15	98 20 03 12	2	Vite fiss. supporto	Screw	Vis	Schraube
	16	98 20 03 06	2	Vite fiss. puls. supp.	Screw	Vis	Schraube
		TAVOLA 18					
	17	14 70 45 05	1	Accumulat. 12V-32Ah	Battery 12V-32Ah	Batterie 12V-32Ah	Batterie 12V-32Ah
		TAVOLA 19					
	18	19 75 13 90	1	Supporto ant. indic.	Support	Support	Stütze
	19	19 74 83 00	1	Cavo cont. 30/85 telef.	Cable	Câble	Kabel
	20	93 40 09 63	2	Innesto a 3 vie	Joint	Connexion	Anschluss
	21	19 75 85 90	1	Braccio destro	R.H. support	Support D	Stütze - R.
	22	19 75 85 91	1	Braccio sinistro	L.H. support	Support G	Stütze - L.
	23	17 75 05 20	2	Intermittenza	Intermittence	Centrale clignotants	Intermittenz
	24	17 75 04 00	1	Squadretta	Support	Equerre	Abstützwinkel
	25	98 05 43 14	1	Vite	Screw	Vis	Schraube
	26	95 00 02 06	2	Rondella piana	Washer	Rondelle	Unterlegscheibe
	27	92 60 22 06	1	Dado per vite	Nut	Ecrou	Mutter
	28	17 74 87 60	1	Commutatore ins. tam.	Selector switch	Commutateur	Regierschalter
	29	17 75 60 00	1	Cappuccio di protez.	Cap	Capuchon	Kappe

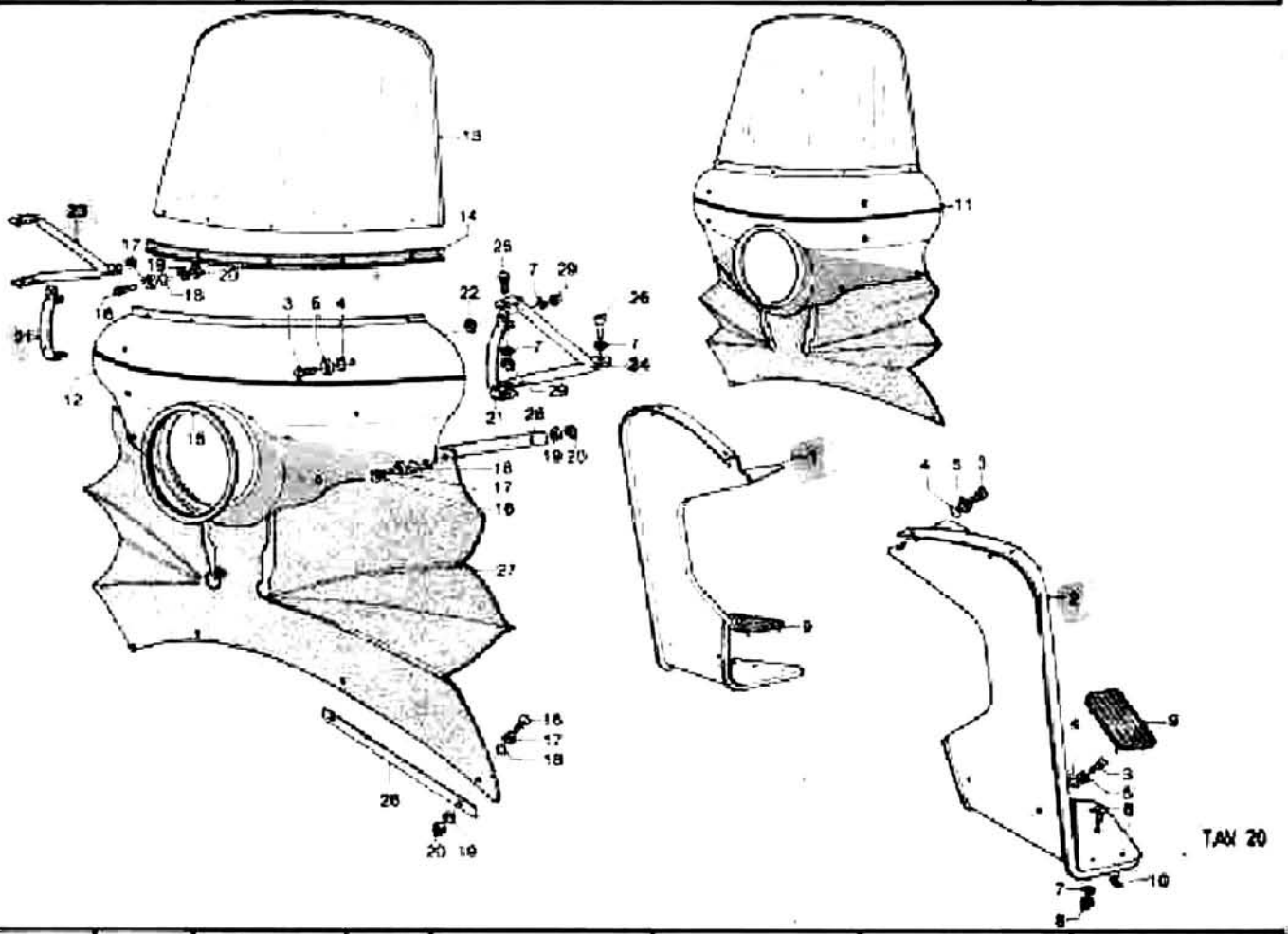

NOTE NOTES NOTES MARKE	POS N.	N. COD CODE No Nr. CODE CODE N.	Q.tà Q.ty Q.tè M.ge	DENOMINAZIONE	DESCRIPTION	DESIGNATION	BEZEICHNUNG
		TAVOLA 20					
	1	19 45 33 90	1	Pedana paragambe dx.	R.H. leg shield	Protection jambes D	Beinschutz, R.
	2	19 45 61 90	1	Pedana paragambe sx.	L.H. leg shield	Protection jambes G	Beinschutz, L.
	3	98 26 06 21	12	Vite sup. fiss. pedana	Screw	Vis	Schraube
	4	45 21 24 00	12	Anello gomma	Rubber ring	Anneau en caoutch.	Gummiring
	5	18 87 78 60	12	Rondella esterna	Washer	Rondelle	Unterlegscheibe
	6	98 32 60 13	2	Vite inf. fiss. pedana	Screw	Vis	Schraube
	7	95 02 11 06	12	Rondella elastica	Washer	Rondelle	Unterlegscheibe
	8	92 80 32 06	2	Dado	Nut	Ecrou	Mutter
	9	19 45 29 91	2	Tappetino	Rubber mat	Tapis	Teppich
	10	39 92 32 00	8	Fermaglio tappetino	Clip	Etrier	Bügel
•	11	-	1	Carenatura con parabrezza	Fairing, compl.	Carénage compl.	Ausrundung, kpl.
	12	19 57 54 90	1	Carenatura nuda sxern.	Fairing	Carénage	Ausrundung
	13	19 57 72 90	1	Parabrezza nudo	Windshield	Pare-brise	Windschutzscheibe
	14	19 57 79 90	1	Guarnizione	Gasket	Joint	Dichtung
	15	19 57 89 90	1	Guarnizione faro	Gasket	Joint	Dichtung
	16	98 26 04-16	13	Vite	Screw	Vis	Schraube
	17	14 57 78 50	13	Rondella	Washer	Rondelle	Unterlegscheibe
	18	90 70 60 36	13	Anello gomma	Rubber ring	Anneau en caoutch.	Gummiring
	19	95 00 72 04	13	Rondella	Washer	Rondelle	Unterlegscheibe
	20	92 60 10 04	13	Dado	Nut	Ecrou	Mutter
	21	19 57 55 90	2	Cavalletto fiss. caren.	U-bolt	Etrier	Bügelschraube
	22	93 11 00 60	4	Distanziale gomma	Rubber spacer	Entretoise caoutch.	Gummidistanzstück
	23	19 57 86 90	1	Supporto destro	R.H. support	Support D	Stütze, R.
	24	19 57 86 91	1	Supporto sinistro	L.H. support	Support G	Stütze, L.
	25	98 07 43 14	4	Vite fiss. supporto	Screw	Vis	Schraube
	26	98 05 23 20	2	Vite fiss. supporto	Screw	Vis	Schraube
	27	19 57 73 80	1	Grembiale par caren.	Apron	Tablier	Windschutz
	28	19 57 75 90	4	Piastrina fiss. gremb.	Plate	Plaque	Platte
	29	92 60 12 06	8	Dado	Nut	Ecrou	Mutter

• Vedi tabelle particolari verniciati · See painted part list · Voir tableau pièces vernissées · Liste der Lackierten Teilen siehe

V35-V50	VARIANTI POLIZIA	SEIMM MOTO GUZZI

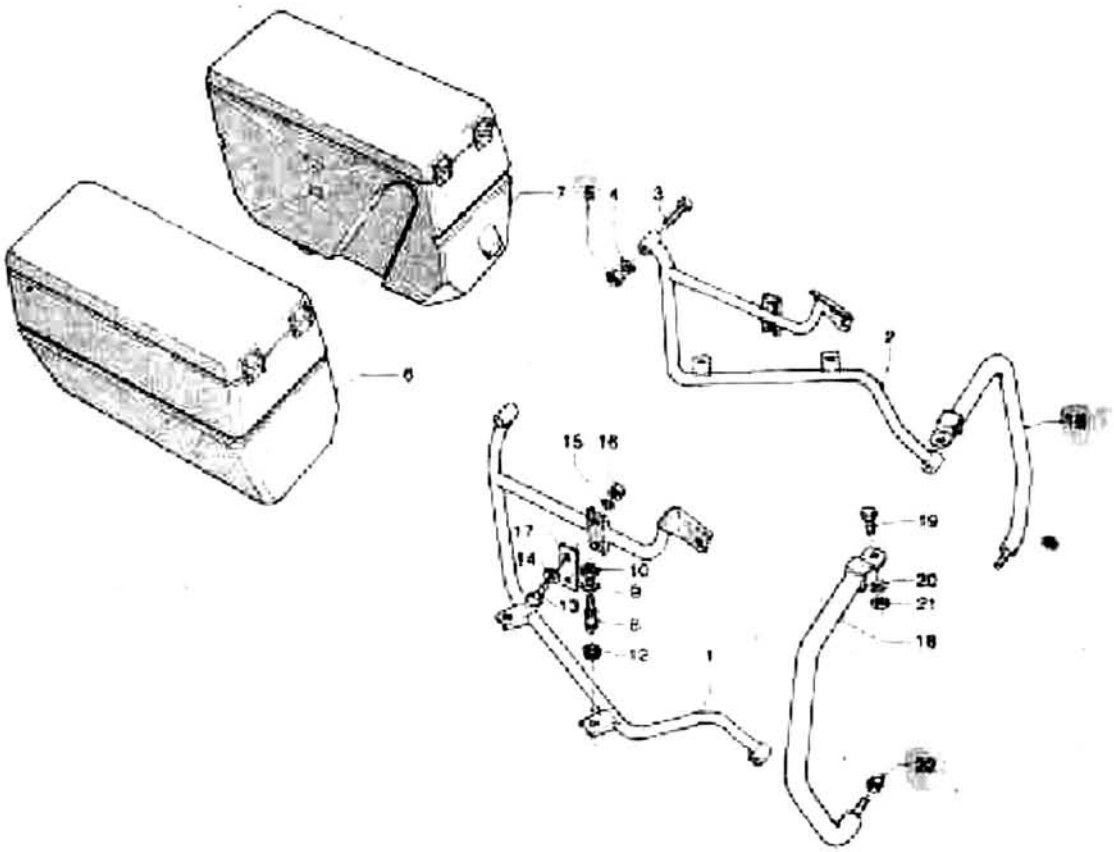

TAV. 21

NOTE NOTES NOTES MARKE	POS. N.	N. COD. CODE No. Nr. CODE CODE Nr.	Q.tà Q.ty Q.té M.ge	DENOMINAZIONE	DESCRIPTION	DESIGNATION	BEZEICHNUNG
	TAVOLA 21						
	1	19 48 50 90	1	Portaborse dx. compl.	R.H. bag holder	Porte-sac D	Taschenträger, R.
	2	19 48 65 90	1	Portaborse sx. compl.	L.H. bag holder	Porte-sac G	Taschenträger, L.
	3	98 06 25 55	2	Vite fiss. portaborse	Screw	Vis	Schraube
	4	95 02 11 10	2	Ranella per vite	Washer	Rondelle	Unterlegscheibe
	5	92 60 22 10	2	Dado per vite	Nut	Ecrou	Mutter
*	6	—	1	Borsa laterale destra	R.H. side bag	Sac D	Tasche, R.
*	7	—	1	Borsa laterale sinistra	L.H. side bag	Sac G	Tasche, L.
	8	19 48 69 90	4	Colonn. fiss. borse	Stud bolt	Goujon	Stiftschraube
	9	95 10 01 41	4	Ranella piana	Washer	Rondelle	Unterlegscheibe
	10	92 60 22 05	4	Dado	Nut	Ecrou	Mutter
	12	91 58 10 82	4	Gommino inferiore	Rubber block	Caoutchouc	Gummistück
	13	98 05 43 20	4	Vite fiss. borse	Screw	Vis	Schraube
	14	95 10 01 41	4	Ranella piana	Washer	Rondelle	Unterlegscheibe
	15	95 02 11 06	4	Ranella elastica	Washer	Rondelle	Unterlegscheibe
	16	92 60 22 06	4	Dado	Nut	Ecrou	Mutter
	17	10 48 82 00	4	Spessore gomma	Rubber spacer	Entretoise caoutch.	Gummidistanzstück
	18	19 45 82 90	2	Paraurti posteriore	Rear bar	Pare-choc AR	Hint. Stossstange
	19	98 05 44 20	2	Vite sup. fiss. paraurti	Screw	Vis	Schraube
	20	95 00 42 08	2	Ranella per vite	Washer	Rondelle	Unterlegscheibe
	21	92 60 22 08	2	Dado per vite	Nut	Ecrou	Mutter
	22	92 63 05 10	2	Dado inferiore	Nut	Ecrou	Mutter

* Vedi tabella particolari verniciati - See painted part list - Voir tableau pièces vernissées - Liste der Lackierten Teilen sehn

Seimm Moto Guzzi - 22054 Mandello del Lario (Co) - Tel. 731112 - 732512 - Tx: 38095 - 12/77 - 1000 K Printed in Italy

Dati indicativi soggetti a modifiche senza impegno di preavviso - All data are subject to modification without notice - Sommerstein (Ng)

SEIMM

MOTO GUZZI

V35-V50

VARIANTI VERSIONE ESTERO
EXPORT VERSION MODIFICATIONS
VARIANTES VERSION EXPORT
AUSLAND AUSFÜHRUNG UMÄNDERUNGEN

VARIANTI POLIZIA

Cod. 19 92 00 01
EDIZIONE LUGLIO 1978

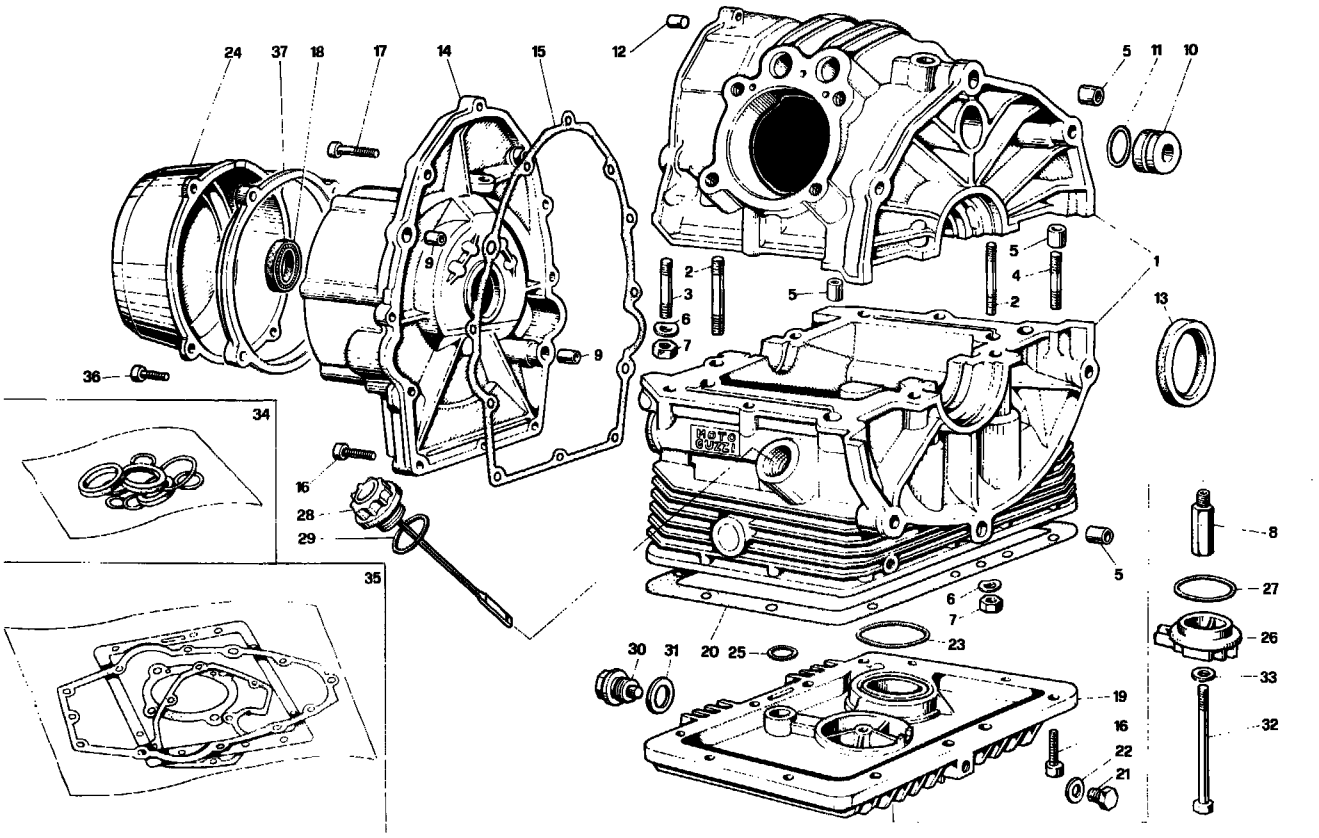

NOTE NOTES NOTES MARKE	POS. N.	N. COD. CODE No. No. CODE CODE Nr.	Q.tà Q.ty Q.té M.ge	DENOMINAZIONE	DESCRIPTION	DESIGNATION	BEZEICHNUNG
	1	19 00 01 00	1	Basamenti accoppiati	Coupled crankcase	Carters couplés	Kurbelgehäuse
	2	96 45 14 55	4	Prig. lungo chius. bas	Stud bolt	Goujon	Stiftschraube
	3	96 45 14 30	4	Prigioniero corto	Short stud bolt	Goujon court	Kurzstiftschraube
	4	96 45 14 35	2	Prigioniero medio	Middle stud bolt	Goujon moyen	Mittelstiftschraube
	5	61 00 20 00	4	Boccola di riferimento	Bush	Douille	Buchse
	6	61 27 03 00	10	Rosetta elast. ondul.	Tooth washer	Rondelle dentée	Zahnscheibe
	7	92 60 22 08	10	Dado per prigionieri	Nut	Ecrou	Mutter
	8	19 00 38 00	1	Raccordo sul basam.	Union	Raccord	Verbindung
	9	61 00 21 00	1	Boccola di riferimento	Bush	Douille	Buchse
	10	19 01 63 01	1	Tappo chiusura foro	Plug	Bouchon	Stopfen
	11	90 70 62 52	1	Guarnizione per tappo	Gasket	Joint	Dichtung
	12	19 01 60 00	1	Tappo su semib. supp.	Plug	Bouchon	Stopfen
	13	90 40 53 67	1	Anello di tenuta	Seal ring	Bague d'étanchéité	Dichtring
	14	19 00 14 00	1	Coperchio distribuz.	Cover	Couvercle	Deckel
	15	19 00 12 00	1	Guarnizione per cop.	Gasket	Joint	Dichtung
	16	98 62 03 25	22	Vite per cop. e coppa	Screw	Vis	Schraube
	17	98 62 03 30	2	Vite lunga fiss. cop.	Screw	Vis	Schraube
	18	90 40 28 9940	1	Anello di tenuta	Seal ring	Bague d'étanchéité	Dichtring
	19	19 00 35 00	1	Coppa olio	Oil sump	Carter inférieur	Ölwanne
	20	19 00 36 00	1	Guarnizione	Gasket	Joint	Dichtung
	21	95 98 02 12	1	Tappo scarico olio	Oil drain plug	Bouchon d'éch. huile	Auslassölstopfen
	22	10 52 89 00	1	Guarnizione alluminio	Gasket	Joint	Dichtung
	23	90 70 65 23	1	Anello di tenuta	Seal ring	Bague d'étanchéité	Dichtring
	24	19 00 16 00	1	Coperchio generatore	Cover	Couvercle	Deckel
	25	90 70 61 70	1	Anello di tenuta	Seal ring	Bague d'étanchéité	Dichtring
	26	19 00 34 00	1	Coperchietto	Cover	Couvercle	Deckel
	27	90 70 64 64	1	Anello di tenuta	Seal ring	Bague d'étanchéité	Dichtring
	28	19 00 49 00	1	Tappo carico olio	Oil filler plug	Bouchon de rempl. huile	Öleinfüllstutzen
	29	90 70 62 82	1	Anello di tenuta	Seal ring	Bague d'étanchéité	Dichtring
	30	12 00 37 02	1	Tappo scarico olio	Oil drain plug	Bouchon d'éch. huile	Auslassölstopfen
	31	95 10 07 09	1	Guarnizione	Gasket	Joint	Dichtung
	32	98 05 24 90	1	Bullone fiss. filtro	Bolt	Boulon	Bolzen
	33	12 15 42 00	1	Ranella	Washer	Rondelle	Scheibe
	34	19 99 95 00	1	Serie paraolio	Oil seal set	Jeu retour d'huile	Ölspritzringsatz
●	35	19 99 90 00	1	Serie guarnizioni	Gasket set	Jeu de joints	Dichtungsatz
	36	98 31 06 30	4	Vite fiss. cop.	Screw	Vis	Schraube

Seimm Moto Guzzi S.p.A. - 22054 Mandello del Lario (Co) - Tel. 731112 - 732512 - Tx: 38095 - 6/78 - 2500 K Printed in Italy

Dati indicativi soggetti a modifiche senza impegno di preavviso - All data are subject to modification without notice

· Scanzorosciate (Bg)
F 92

www.guzzitek.org - Revente Interdite - Revendita Vietata - Resaling Forbiden - Wiederverkauf Verboten

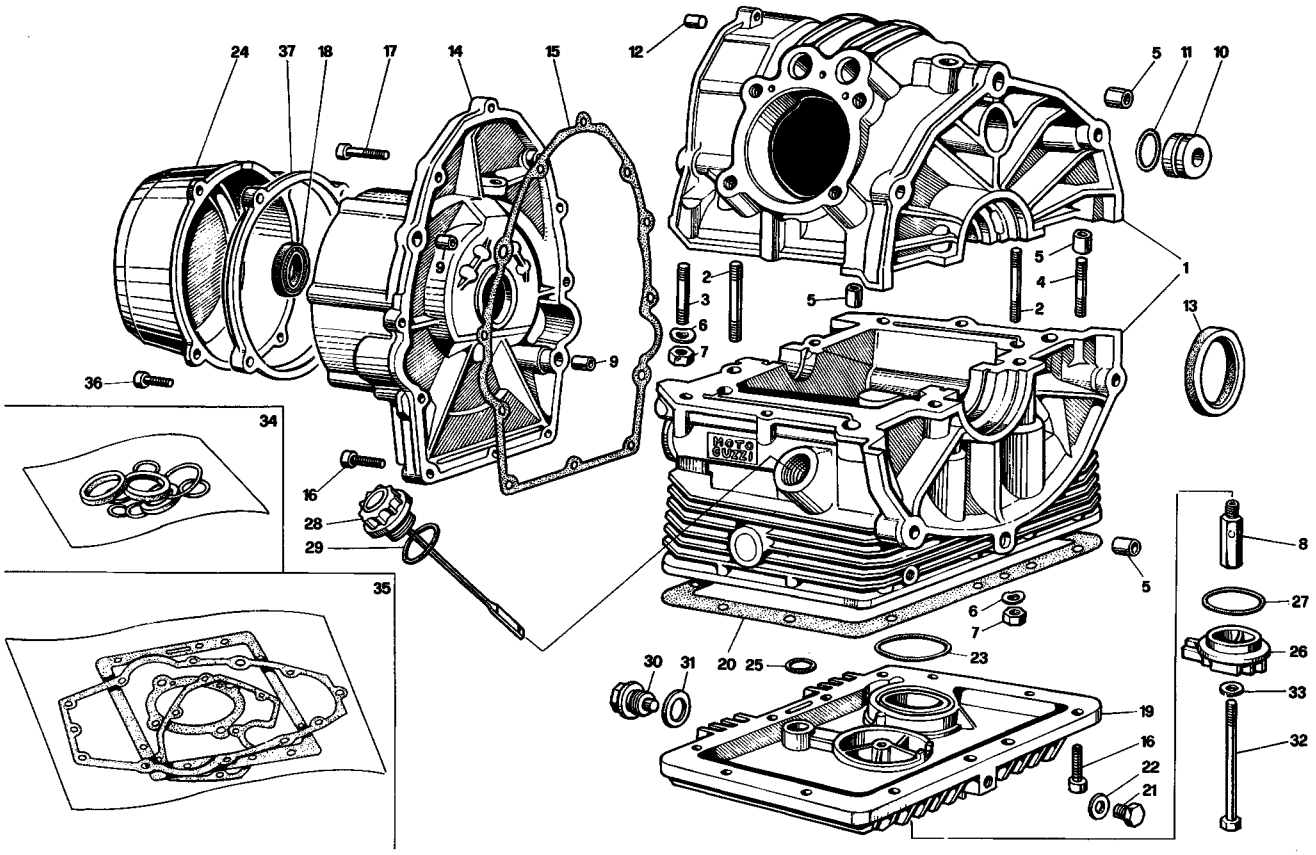

NOTE NOTES NOTES MARKE	POS. N.	N. COD. CODE No. No. CODE CODE Nr.	Q.tà Q.ty Q.té M.ge	DENOMINAZIONE	DESCRIPTION	DESIGNATION	BEZEICHNUNG
	37	18 00 11 50	1	Flangia cop. altern.	Flange	Flasque	Flansch
●	—	19 99 10 10	1	Motore completo senza cambio	Engine assy, without transmission	Moteur complet sans boîte à vitesses	Motor, kpl. ohne Schaltgetriebe
●	—	19 99 14 10	1	Motore e cambio com.	Engine & transm. com.	Moteur et boîte à vit. c.	Motor und Schaltung

● I sottonotati particolari rappresentano le varianti per il mod. V50
Following items refer to V50 mod. only
Les pièces indiquées ci-dessous représentent les variantes pour le mod. V50
Die untergegebene Teile sind nur für Modell V50 gültig

35	19 99 90 50	1	Serie guarnizioni	Gasket set	Jeu de joints	Dichtungsatz
—	19 99 10 50	1	Motore completo senza cambio	Engine assy, without transmission	Moteur complet sans boîte à vitesses	Motor, kpl. ohne Schaltgetriebe
—	19 99 14 50	1	Motore e cambio com.	Engine & transm. com.	Moteur et boîte à vit. c.	Motor und Schaltg.

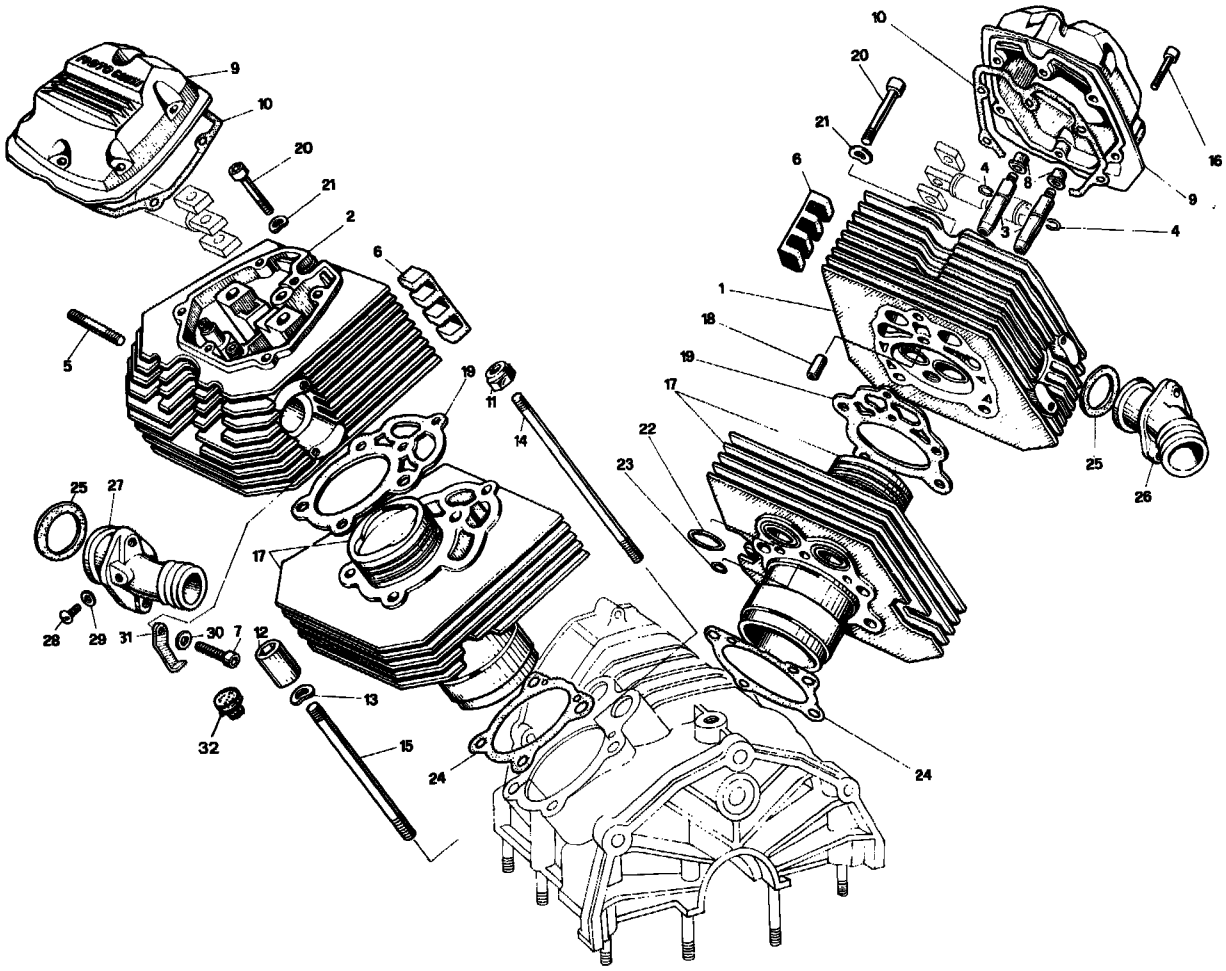

NOTE NOTES NOTES MARKE	POS. N.	N. COD. CODE No. No. CODE CODE Nr.	Q.tà Q.ty Q.té M.ge	DENOMINAZIONE	DESCRIPTION	DESIGNATION	BEZEICHNUNG
●	1	19 02 21 10	1	Testa dx completa	R.H. cylinder head	Culasse D compl.	Zylinderkopf, R.
●	2	19 02 22 10	1	Testa sx completa	L.H. cylinder head	Culasse G compl.	Zylinderkopf, L.
	3	61 03 68 01	4	Guidavalvole	Valve guide	Guide de soupape	Ventilführung
	4	90 35 30 09	4	Anello elastico	Circlip	Jonc élastique	Sperring
	5	96 50 60 42	4	Prigioniero	Stud bolt	Goujon	Stiftschraube
	6	19 02 53 00	4	Tassello antivibrante	Vibration damp. piece	Anti-vibrant	Schwingungdämpfer
	7	98 82 23 25	4	Vite	Screw	Vis	Schraube
	8	61 03 78 01	4	Cappellotto ten. olio	Cap	Capuchon	Kappe
	9	19 02 35 00	2	Coperchio testa	Head cover	Couvercle culasse	Zylinderkopfdeckel
	10	19 02 37 00	2	Guarnizione per cop.	Gasket	Joint	Dichtung
	11	92 60 20 10	4	Dado prig. lungo	Nut	Ecrou	Mutter
	12	13 02 19 00	4	Dado a colonnetta	Nut	Ecrou	Mutter
	13	95 12 91 80	4	Ranella	Washer	Rondelle	Scheibe
	14	96 51 01 82	4	Tirante lungo	Long tie rod	Tirant long	Lange Tragstange
	15	96 51 01 25	4	Tirante corto	Short tie rod	Tirant court	Kurze Tragstange
	16	98 62 03 25	12	Vite fiss. coperchio	Screw	Vis	Schraube
●	17	19 06 01 00	2	Cilindro e pistone	Cylinder & piston	Cylindre et piston	Zylinder u. Kolben
	18	19 02 13 00	2	Boccola di riferimento	Bush	Douille	Buchse
●	19	19 02 20 00	2	Guarnizione	Gasket	Joint	Dichtung
	20	98 62 04 45	2	Vite	Screw	Vis	Schraube
	21	61 27 03 00	2	Ranella	Washer	Rondelle	Scheibe
	22	90 70 62 52	4	Guarnizione OR	Gasket	Joint	Dichtung
	23	61 02 72 00	2	Guarnizione OR	Gasket	Joint	Dichtung
	24	19 02 08 00	2	Guarnizione	Gasket	Joint	Dichtung
	25	19 11 55 00	2	Guarnizione per pipe	Gasket	Joint	Dichtung
	26	19 11 50 50	1	Pipa aspirazione dx	R.H. manifold	Pipe D	Ansaugkrümmer, R.
	27	19 11 50 51	1	Pipa aspirazione sx	L.H. manifold	Pipe G	Ansaugkrümmer, L.
	28	98 31 06 10	2	Vite chiusura foro	Screw	Vis	Schraube
	29	95 10 01 16	2	Ranella	Washer	Rondelle	Scheibe
	30	61 01 38 00	2	Ranella per vite	Washer	Rondelle	Scheibe
	31	19 71 80 00	2	Fascetta	Clamp	Collier	Schelle
	32	93 18 02 45	4	Tappo per dado	Plug	Bouchon	Stopfen

Seimm Moto Guzzi S.p.A. - 22054 Mandello del Lario (Co) - Tel. 731112 - 732512 - Tx: 38095 - 6/78 - 2500 K Printed in Italy

Dati indicativi soggetti a modifiche senza impegno di preavviso - All data are subject to modification without notice - Scanzorosciate (Bg)

www.guzzitek.org - Revente Interdite - Revendita Vietata - Resaling Forbiden - Wiederverkauf Verboten

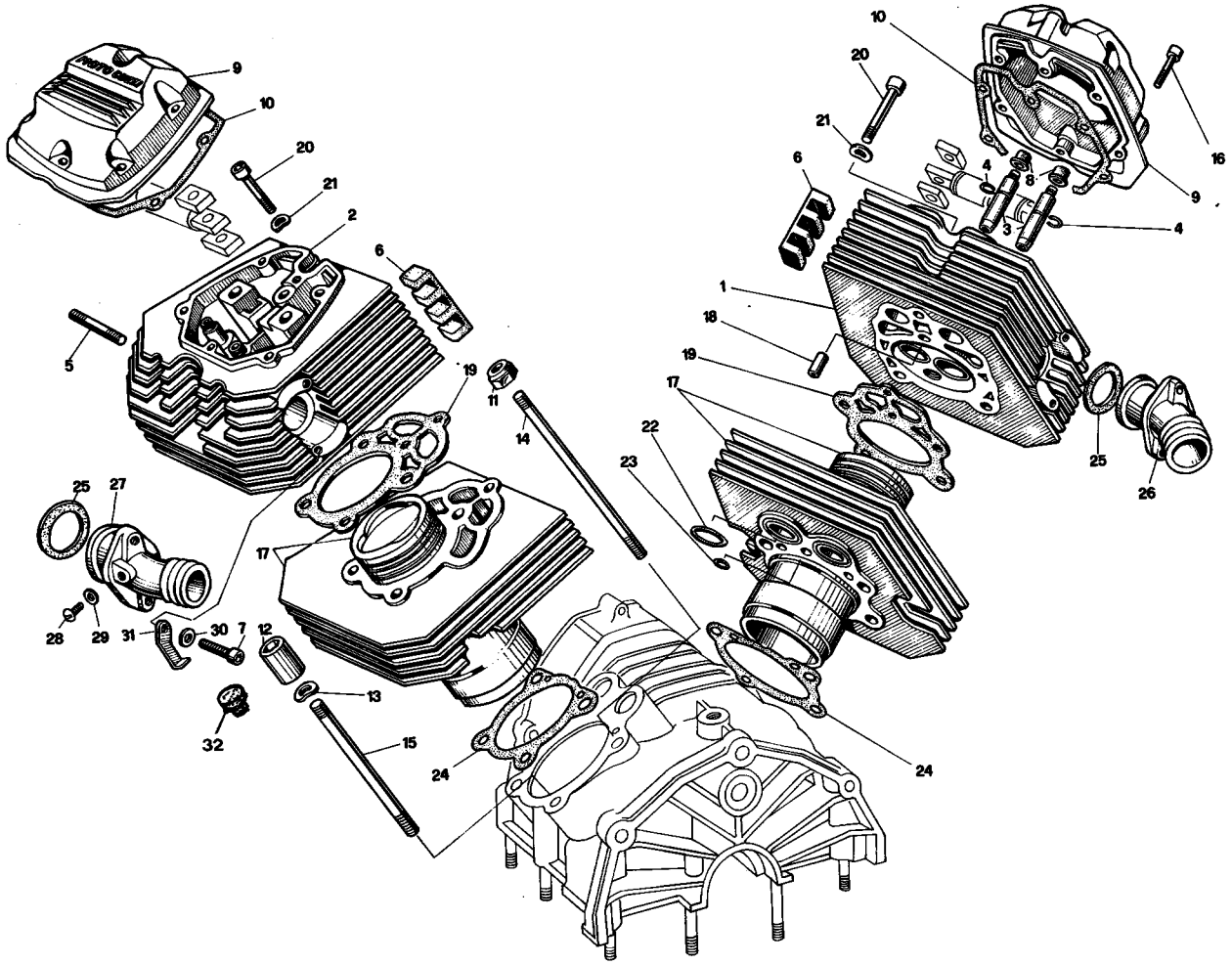

NOTE NOTES NOTES MARKE	POS. N.	N. COD. CODE No. No. CODE CODE Nr.	Q.tà Q.ty Q.té M.ge	DENOMINAZIONE	DESCRIPTION	DESIGNATION	BEZEICHNUNG
	1	19 02 21 50	1	Testa dx completa	R.H. cylinder head	Culasse D compl.	Zylinderkopf, R.
	2	19 02 22 50	1	Testa sx completa	L.H. cylinder head	Culasse G compl.	Zylinderkopf, L.
	17	19 06 01 50	2	Cilindro e pistone	Cylinder & piston	Cylindre et piston	Zylinder und Kolben
	19	19 02 20 50	2	Guarnizione	Gasket	Joint	Dichtung

- **I sottonotati particolari rappresentano le varianti per il mod. V50**
  Following items refer to V50 mod. only
  Les pièces indiquées ci-dessous représentent les variantes pour le mod. V50
  Die untergegebene Teile sind nur für Modell V50 gültig

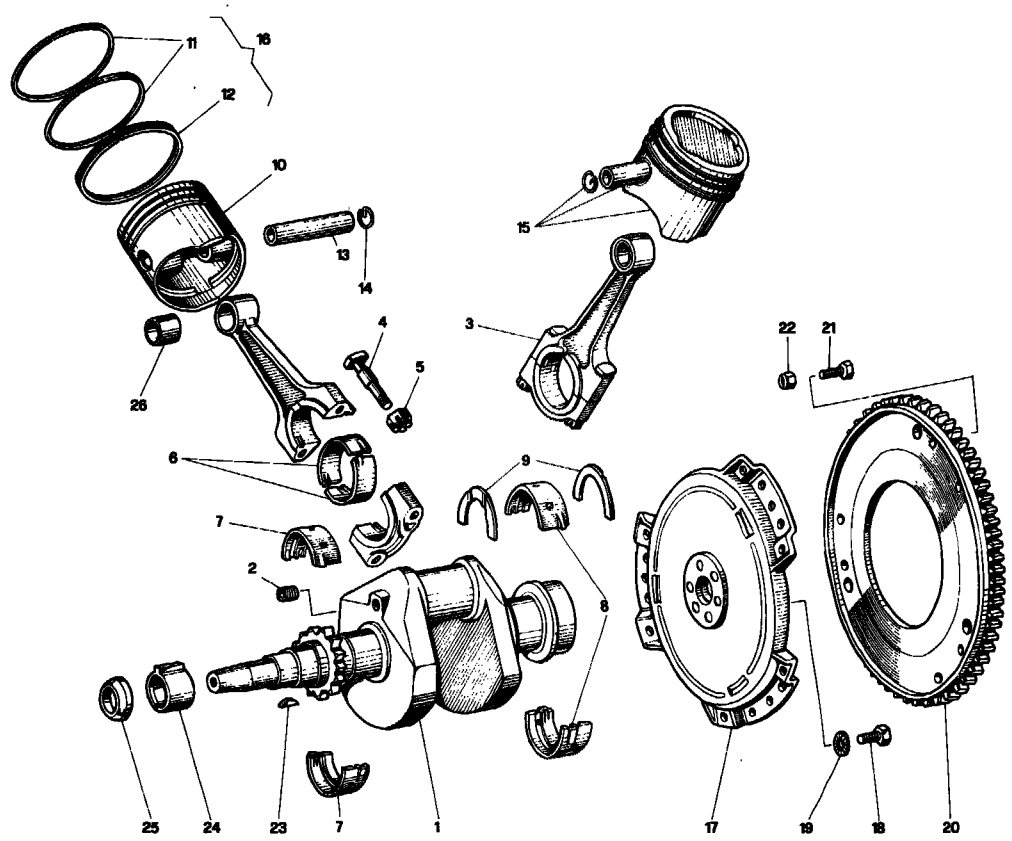

NOTE NOTES NOTES MARKE	POS. N.	N. COD. CODE No. No. CODE CODE Nr.	Q.tà Q.ty Q.té M.ge	DENOMINAZIONE	DESCRIPTION	DESIGNATION	BEZEICHNUNG
●	1	19 06 42 00	1	Albero motore	Crankshaft	Vilebrequin	Kurbelwelle
	2	19 06 54 00	1	Tappo	Plug	Bouchon	Stopfen
	3	19 06 15 00	2	Biella completa	Connecting rod, assy	Bielle complète	Pleuelstange, kpl.
	4	61 06 22 01	4	Vite fiss. cappello	Screw	Vis	Schraube
	5	61 06 24 01	4	Dado	Nut	Ecrou	Mutter
	6	61 06 20 10	4	Semicuscinetto di biella	Big-end half bearing	Demi-couss. de tête biel.	Pleuellagerschale
	7	61 06 56 00	2	Semicuscin. di banco	Main half-bearing	Demi-couss. de vilebr.	Hauptlager
	8	19 06 65 00	2	Semicuscin. di banco posteriore	Rear main half-bearing	Demi-couss. de vilebr. AR	Hint. Hauptlager
	9	19 06 64 00	2	Semirosetta di spall.	Half-washer	Demi-rondelle	Halb-Scheibe
●	10	19 06 04 00	2	Pistone nudo	Piston	Piston	Kolben
●	11	19 06 07 00	4	Fascia elastica di ten.	Piston ring	Segment d'étanchéité	Kolbenring
●	12	19 06 10 00	2	Fascia raschiaolio	Scraper ring	Segment racleur	Ölabstreifring
●	13	62 06 12 00	2	Spinotto per pistone	Wrist pin	Axe du piston	Kolbenbolzen
	14	61 06 13 00	4	Anello di fermo	Retaining ring	Bague de serrage	Verschlussring
●	15	19 06 02 00	2	Pistone completo	Piston assy	Piston complet	Kolben, kpl.
●	16	19 06 06 00	1	Gruppo fasce elastiche	Piston ring set	Ensemble de segm. d'ét.	Kolbenringsatz
	17	19 08 03 00	1	Campana volano friz.	Clutch housing	Carter d'embrayage	Kupplungsgehäuse
	18	19 06 77 00	6	Vite	Screw	Vis	Schraube
	19	14 61 59 01	6	Rosetta	Washer	Rondelle	Scheibe
	20	19 06 79 00	1	Corona dentata	Crown gear	Couronne dentée	Anlasszahnkranz
	21	98 05 43 18	6	Vite fiss. corona	Screw	Vis	Schraube
	22	92 63 01 06	6	Dado autobloccante	Self-locking nut	Ecrou à autoblocage	Hutmutter
	23	91 70 13 50	1	Chiavetta per rotore	Key	Languette	Keil
	24	19 72 10 00	1	Rotore d'accensione	Starter rotor	Rotor	Rotor
	25	61 06 68 00	1	Gommino	Rubber	Caoutchouc	Gummistück
	26	19 06 18 00	2	Boccola biella	Connecting rod bush	Douille bielle	Pleuelbuchse

● **I sottonotati particolari rappresentano le varianti per il mod. V50**
Following items refer to V50 mod. only
Les pièces indiquées ci-dessous représentent les variantes pour le mod. V50
Die untergegebene Teile sind nur für Modell V50 gültig

Seimm Moto Guzzi S.p.A. - 22054 Mandello del Lario (Co) - Tel. 731112 - 732512 - Tx: 38095 - 6/78 - 2500 K Printed in Italy

Dati indicativi soggetti a modifiche senza impegno di preavviso - All data are subject to modification without notice - Scanzorosciate (Bg)

www.guzzitek.org - Revente Interdite - Revendita Vietata - Resaling Forbiden - Wiederverkauf Verboten

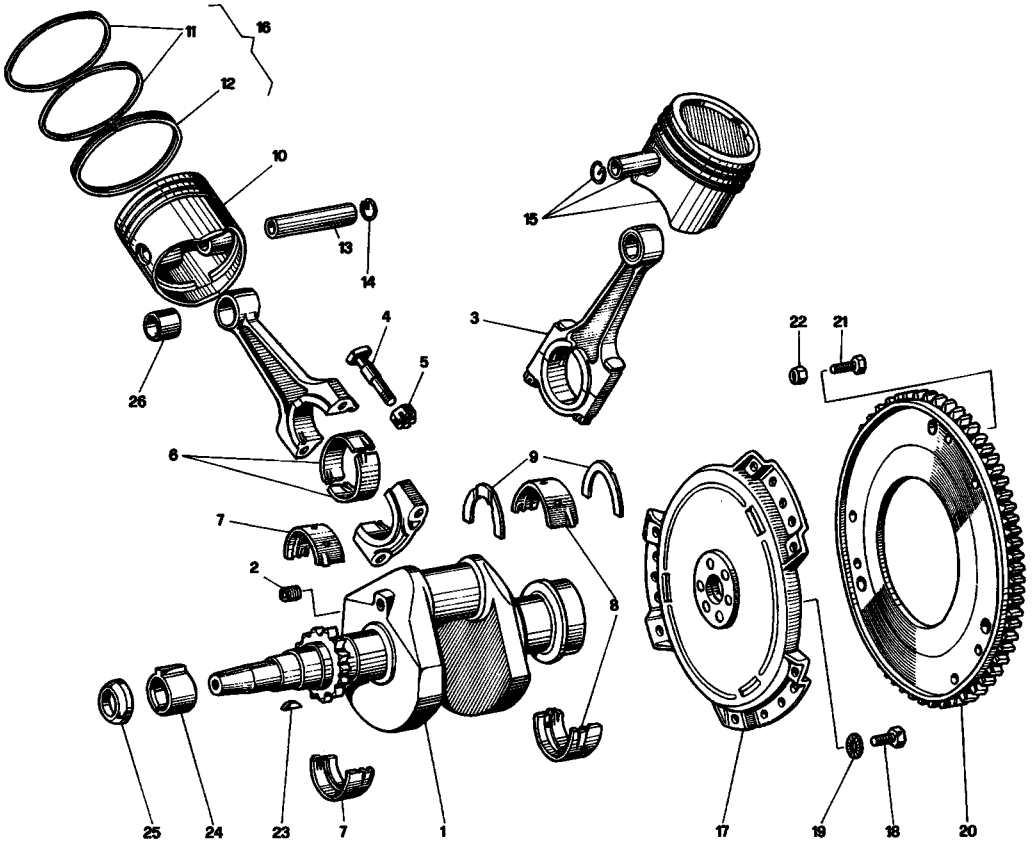

NOTE NOTES NOTES MARKE	POS. N.	N. COD. CODE No. No. CODE CODE Nr.	Q.tà Q.ty Q.té M.ge	DENOMINAZIONE	DESCRIPTION	DESIGNATION	BEZEICHNUNG
	1	19 06 42 50	1	Albero motore	Crankshaft	Vilebrequin	Kurbelwelle
*	10	19 06 04 50	2	Pistone nudo	Piston	Piston	Kolben
	11	19 06 07 50	4	Fascia elastica	Piston ring	Segment d'étanchéité	Kolbenring
	12	19 06 10 50	2	Fascia raschiaolio	Scraper ring	Segment racleur	Ölabstreifring
	13	19 06 12 50	2	Spinotto	Wrist pin	Axe du piston	Kolbenbolzen
*	15	19 06 02 50	2	Pistone completo	Piston, assy	Piston complet	Kolben, kpl.
	16	19 06 06 50	1	Gruppo fasce elastiche	Piston ring set	Ens. de segment d'ét.	Kolbenringsatz

*** Per motori decompressi - Engines low compression ratio - Pour moteurs B.T.O.**
*** Für Motoren mit niedrigen Kompressionsverhältnis**

10	19 06 04 60	2	Pistone nudo	Piston	Piston	Kolben
15	19 06 02 60	2	Pistone completo	Piston, assy	Piston complet	Kolben, kpl.

Dati indicativi soggetti a modifiche senza impegno di preavviso - All data are subject to modification without notice
- Scanzorosciate (Bg)

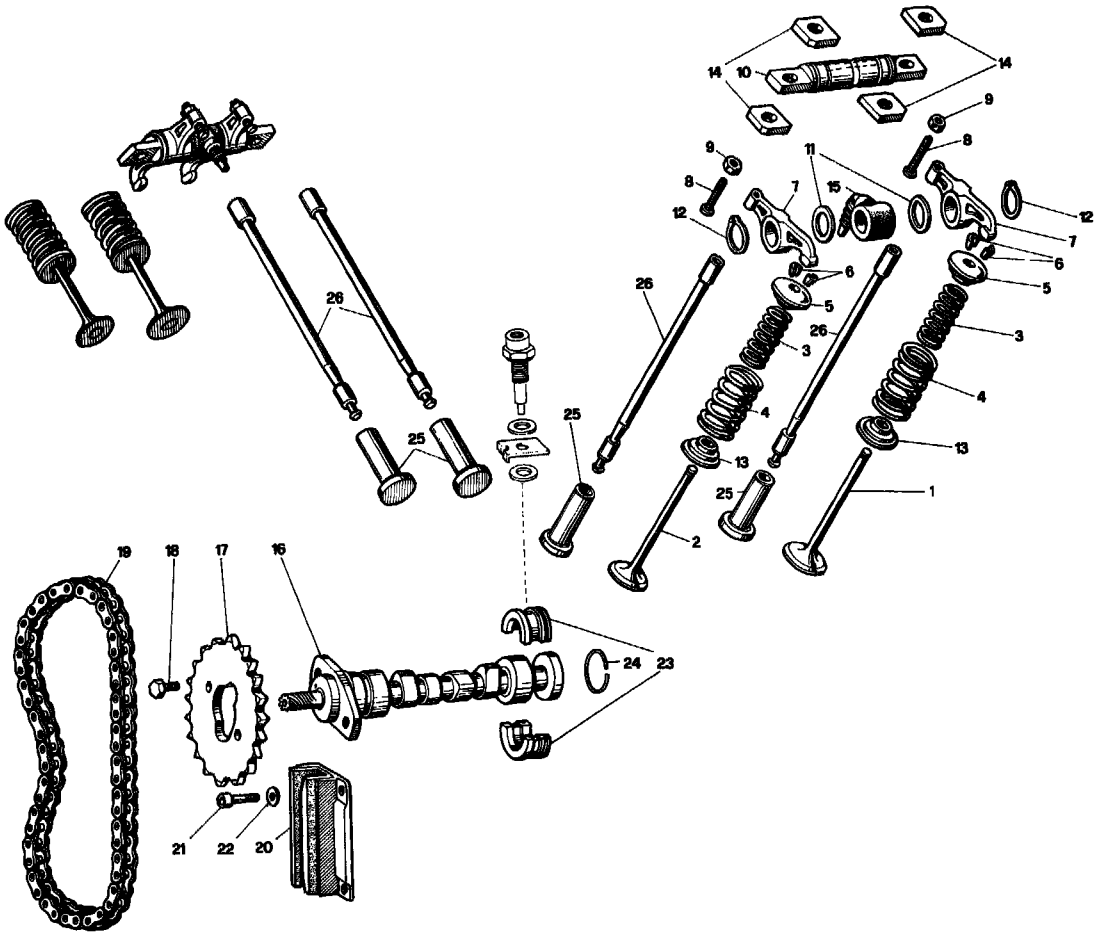

NOTE NOTES NOTES MARKE	POS. N.	N. COD. CODE No. No. CODE CODE Nr.	Q.tà Q.ty Q.té M.ge	DENOMINAZIONE	DESCRIPTION	DESIGNATION	BEZEICHNUNG
●	1	19 03 60 10	2	Valvola aspirazione	Intake valve	Soupape d'admission	Einlassventil
	2	19 03 61 50	2	Valvola scarico	Exhaust valve	Soupape d'échapp.	Auslassventil
	3	61 03 76 00	4	Molla interna	Inside spring	Ressort intér.	Innenfeder
	4	61 03 75 00	4	Molla esterna	Outside spring	Ressort extér.	Aussenfeder
	5	61 03 80 00	4	Piattello superiore	Upper plate	Plaque supér.	Oberteller
	6	61 03 81 00	8	Semiconi	Cotter	Demi-cône	Kegelstück
	7	19 03 05 00	4	Bilanciere aspir. scar.	Int. & exh. rocker arm	Culbut. d'adm. et éch.	Einlass-Auslasskipphebel
	8	19 03 40 00	4	Vite	Screw	Vis	Schraube
	9	92 60 24 06	4	Dado	Nut	Ecrou	Mutter
	10	19 03 20 00	2	Perno bilancieri	Rocker arm pin	Goujon de culbuteur	Kipphebelstift
	11	19 03 23 00	4	Rosetta di rasamento	Washer	Rondelle	Scheibe
	12	90 27 10 18	4	Anello Seeger	Ring	Bague	Seegerring
	13	61 03 70 00	4	Piattello inferiore	Lower plate	Plaque infér.	Unterteller
	14	19 03 29 00	8	Spessore	Spacer	Entretoise	Distanzstück
	15	19 02 75 00	2	Manicotto	Sleeve	Manchon	Manschette
	16	19 05 33 01	1	Albero a camme	Cam shaft	Arbre à cames	Verteilwelle
	17	19 05 45 00	1	Ingranaggio distribuz.	Timing gear	Pignon de distribut.	Nockenwellenrad
	18	61 05 49 00	2	Bullone	Bolt	Boulon	Bolzen
	19	19 05 80 00	1	Catena com. distribuz.	Timing chain	Chaîne de distribution	Steuerkette
	20	19 05 84 00	1	Guidacatena	Chain guide	Guide de chaîne	Kettenführung
	21	98 62 23 16	2	Vite fiss. guida	Screw	Vis	Schraube
	22	95 00 42 06	2	Ranella per vite	Washer	Rondelle	Scheibe
	23	19 05 57 00	2	Settore fermo	Sector	Secteur	Sektor
	24	90 35 30 29	1	Anello elastico	Spring ring	Bague élastique	Federring
	25	19 04 58 01	4	Punteria	Valve tappet	Poussoir de soupape	Ventilstossel
	26	19 04 50 01	4	Astina com. bilancieri	Rod	Tige	Stange

● I sottonotati particolari rappresentano le varianti per il mod. V50
Following items refer to V50 mod. only
Les pièces indiquées ci-dessous représentent les variantes pour le mod. V50
Die untergegebene Teile sind nur für Modell V50 gültig

1	19 03 60 50	2	Valvola aspirazione	Intake valve	Soupape d'admission	Einlassventil

Seimm Moto Guzzi S.p.A. - 22054 Mandello del Lario (Co) - Tel. 731112 - 732512 - Tx: 38095 - 6/78 - 2500 K Printed in Italy

Dati indicativi soggetti a modifiche senza impegno di preavviso - All data are subject to modification without notice - Scanzorosciate (Bg)

www.guzzitek.org - Revente Interdite - Revendita Vietata - Resaling Forbiden - Wiederverkauf Verboten

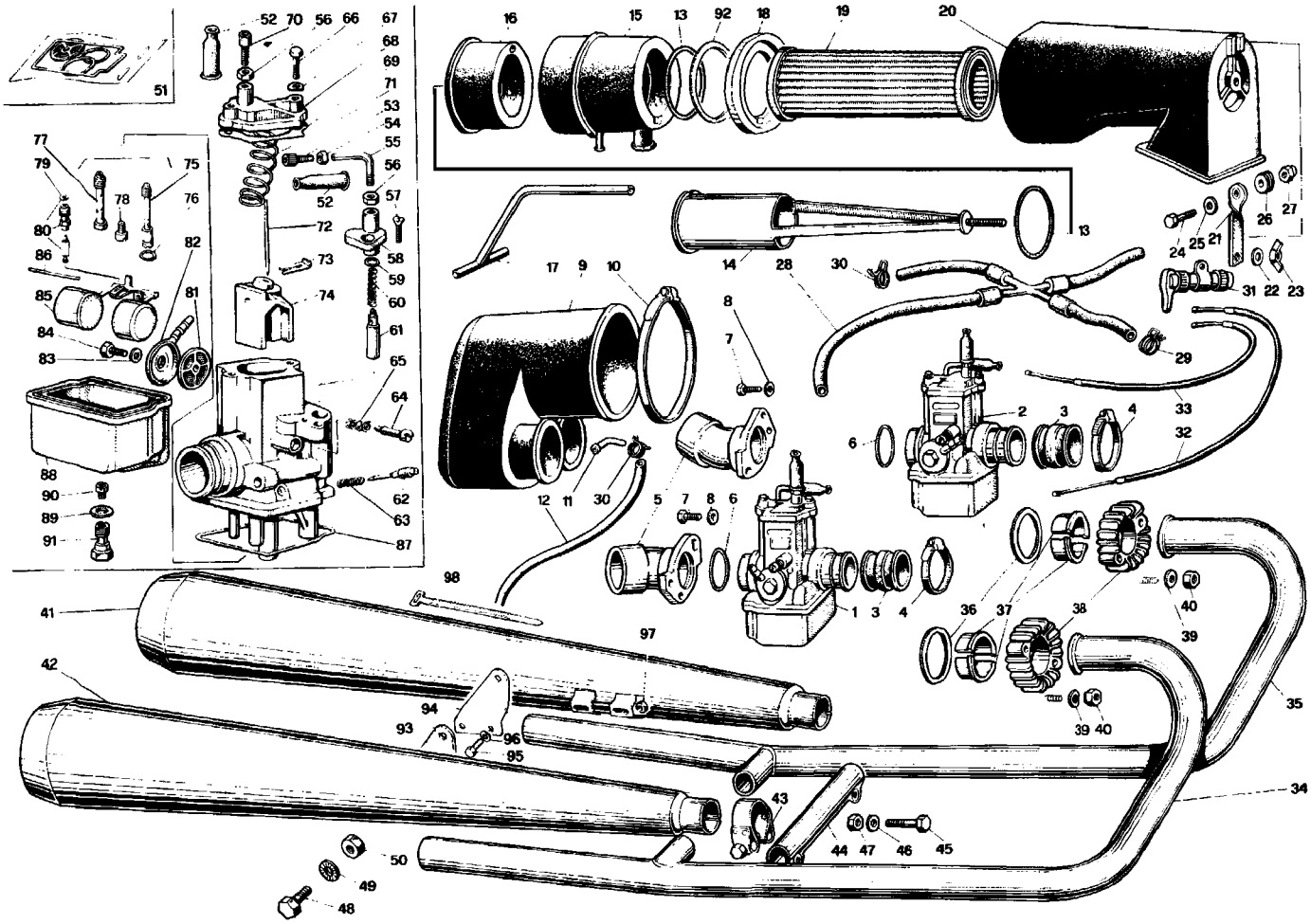

NOTE NOTES NOTES MARKE	POS. N.	N. COD. CODE No. No. CODE CODE Nr.	Q.tà Q.ty Q.té M.ge	DENOMINAZIONE	DESCRIPTION	DESIGNATION	BEZEICHNUNG
●	1	19 11 26 10	1	Carbur. dx VHB 24	R.H. carbur. VHB 24	Carbur. D VHB 24	Vergaser R. VHB 24
●	2	19 11 26 11	1	Carbur. sx VHB 24	L.H. carbur. VHB 24	Carbur. G VHB 24	Vergaser, L. VHB 24
	3	61 11 43 00	2	Manicotto	Sleeve	Manchon	Manschette
	4	93 30 50 25	4	Fascetta	Clamp	Collier	Schelle
	5	19 11 44 00	2	Cornetto presa aria	Air intake	Prise d'air	Lufteinlassrohr
	6	90 70 63 15	2	Anello di tenuta	Seal ring	Bague d'étanchéité	Dichtring
	7	98 05 42 14	4	Vite	Screw	Vis	Schraube
	8	95 00 42 05	4	Ranella	Washer	Rondelle	Scheibe
	9	19 11 43 00	1	Collettore aspirazione	Induction manifold	Collecteur d'admission	Ansaugsammler
	10	93 30 50 92	1	Fascetta	Clamp	Collier	Schelle
	11	17 11 46 50	1	Tubetto	Pipe	Tuyau	Rohr
■	12	823 94 20 90		Tubo sfiato	Breather pipe	Tuyau de décharge	Entlufterrohr
	13	90 70 65 52	2	Anello di tenuta	Seal ring	Bague d'étanchéité	Dichtring
	14	19 15 57 00	1	Supporto filtro	Filter support	Support filtre	Filterhalter
	15	19 15 67 01	1	Elemento anter. sfiato	Front breather element	Elément AV décharge	Vord. Entlufterteil
	16	19 15 69 00	1	Elemento post. sfiato	Rear breather element	Elément AR décharge	Hint. Entlufterteil
	17	19 15 60 01	1	Tubo sfiato interno	Inside vent hose	Tuyau de reniflard int.	Entluftungsschlauch
	18	17 11 34 50	1	Fondello di guida	Ring	Anneau	Ring
	19	17 11 36 50	1	Filtro aria	Filter cartridge	Cartouche filtre	Luftfilterpatrone
	20	17 11 40 50	1	Custodia filtro	Air filter chamber	Chambre de filtre air	Luftfilterkamer
	21	19 11 41 00	1	Piastra di supporto	Plate	Plaque	Platte
	22	95 10 00 59	1	Ranella	Washer	Rondelle	Scheibe
	23	92 67 03 05	1	Dado ad alette	Wing nut	Ecrou-papillon	Flügelmutter
	24	98 05 22 22	1	Vite	Screw	Vis	Schraube
	25	95 10 00 59	1	Ranella	Washer	Rondelle	Scheibe
	26	91 55 10 85	1	Gommino	Rubber	Caoutchouc	Gummistück
	27	92 63 01 05	1	Dado nylon	"Nylon" nut	Ecrou en nylon	Nylonmutter
	28	19 10 65 50	1	Tubazione benzina	Fuel pipe	Tuyau d'alim. essence	Kraftstoffleitung
	29	61 10 84 00	2	Fascetta	Clamp	Collier	Schelle
	30	61 10 85 00	4	Fascetta	Clamp	Collier	Schelle
	31	19 13 31 00	1	Dispositivo com. starter	Starter device	Dispositif de démarrage	Startvorrichtung
	32	19 13 35 00	1	Trasmissione starter dx	R.H. starter cable	Fil de démarr. D	Startkabel, R.
	33	19 13 40 00	1	Trasmissione starter sx	L.H. starter cable	Fil de démarr. G	Startkabel, L
	34	19 12 07 00	1	Tubo di scarico dx	R.H. exhaust pipe	Tuyau d'échapp. D	Auspuffrohr, R.
	35	19 12 07 05	1	Tubo di scarico sx	L.H. exhaust pipe	Tuyau d'échapp. G	Auspuffrohr, L.
	36	61 02 52 00	2	Guarnizione	Gasket	Joint	Dichtung

Seimm Moto Guzzi S.p.A. - 22054 Mandello del Lario (Co) - Tel. 731112 - 732512 - Tx: 38095 - 6/78 - 2500 K Printed in Italy

Dati indicativi soggetti a modifiche senza impegno di preavviso - All data are subject to modification without notice

Scanzorosciate (Bg)

www.guzzitek.org - Revente Interdite - Revendita Vietata - Resaling Forbiden - Wiederverkauf Verboten

V35-V50

Tavola - Drawing
Table - Bild
5

ALIMENTAZIONE - SCARICO
FEEDING - EXHAUST
ALIMENTATION - ECHAPPEMENT
ZUFÜHRUNG - AUSPUFF

SEIMM
MOTO GUZZI

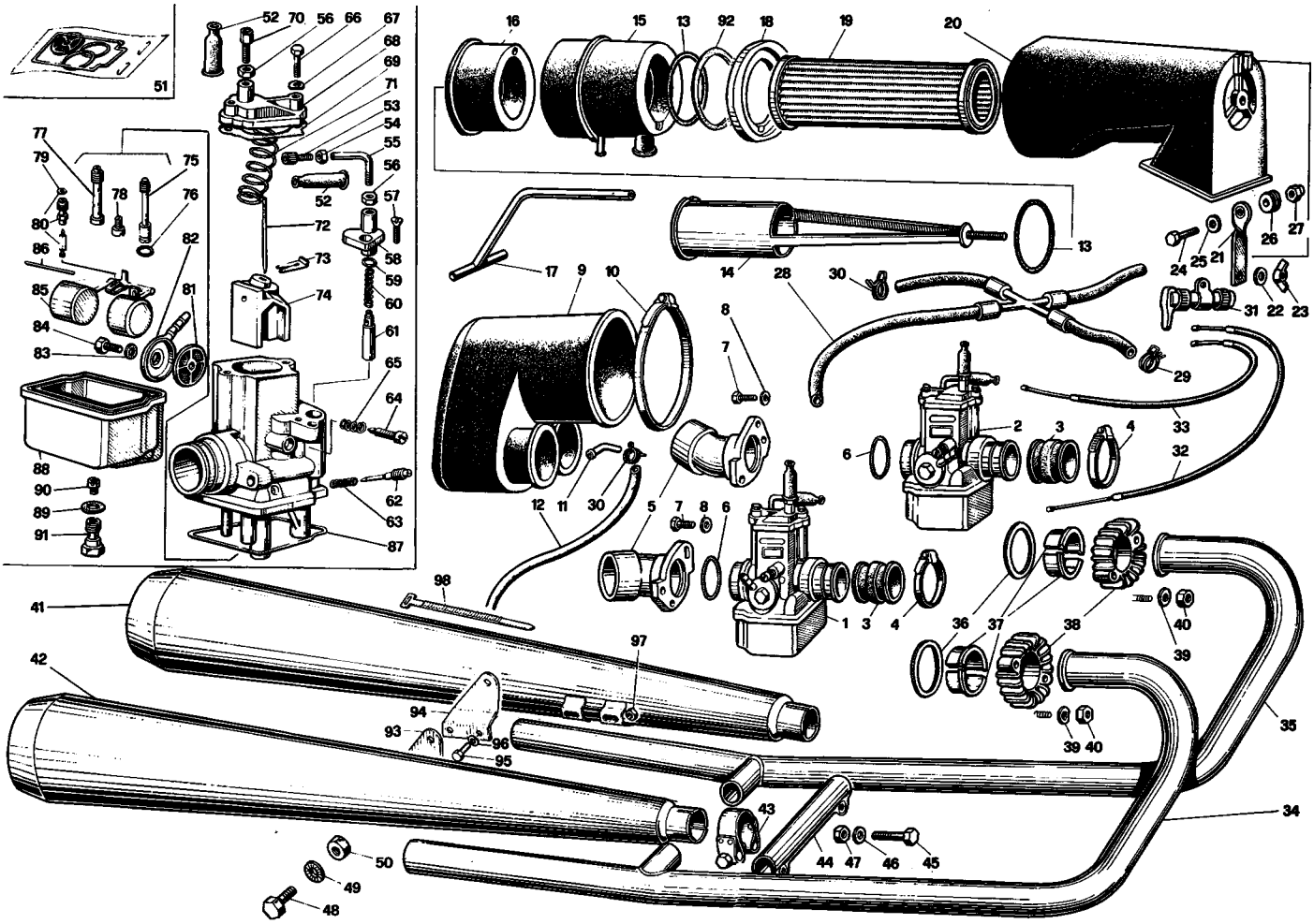

NOTE NOTES NOTES MARKE	POS. N.	N. COD. CODE No. No. CODE CODE Nr.	Q.tà Q.ty Q.té M.ge	DENOMINAZIONE	DESCRIPTION	DESIGNATION	BEZEICHNUNG
	37	61 02 54 00	4	Distanziale	Spacer	Entretoise	Distanzstück
	38	61 02 51 00	2	Ghiera	Ring nut	Collier	Ring
	39	61 01 38 00	4	Ranella	Washer	Rondelle	Scheibe
	40	92 70 10 62	4	Dado	Nut	Ecrou	Mutter
	41	19 12 29 01	1	Silenziatore sx	L.H. silencer	Silencieux G	Schalldämpfer, L.
	42	19 12 30 01	1	Silenziatore dx	R.H. silencer	Silencieux D	Schalldämpfer, R.
	43	61 12 69 20	2	Fascetta	Clamp	Collier	Schelle
	44	19 12 11 00	1	Tubo di collegamento	Connecting pipe	Tuyau de liaison	Verbindungsrohr
	45	98 05 23 30	2	Vite	Screw	Vis	Schraube
	46	95 00 02 06	2	Ranella	Washer	Rondelle	Scheibe
	47	92 60 22 06	2	Dado	Nut	Ecrou	Mutter
	48	98 05 45 22	2	Vite	Screw	Vis	Schraube
	49	95 02 11 10	2	Rondella elastica	Spring washer	Rondelle élastique	Federscheibe
	50	92 60 24 10	2	Dado	Nut	Ecrou	Mutter
*	51	39 93 99 00	2	Busta guarnizioni carb.	Gasket set	Jeu de joints	Dichtungsatz
*	52		4	Cappuccio	Cap	Capuchon	Kappe
	53	49 93 87 00	2	Vite tendifilo	Screw	Vis	Schraube
	54	49 93 88 00	2	Dado	Nut	Ecrou	Mutter
	55	49 93 89 00	2	Tubetto deviatore	Pipe	Tuyau	Rohr
	56	12 93 73 00	4	Dado	Nut	Ecrou	Mutter
	57	13 93 79 00	2	Vite	Screw	Vis	Schraube
	58	17 93 74 50	2	Coperchio dispos. avv.	Starter device cover	Couvercle dispos. dém.	Startvorr. Deckel
*	59		2	Guarnizione	Gasket	Joint	Dichtung
	60	25 93 76 00	2	Molla	Spring	Ressort	Feder
	61	13 93 78 00	2	Valvola avviamento	Starter valve	Soupape de démarr.	Startventil
	62	13 93 62 00	2	Vite reg. minimo	Screw	Vis	Schraube
	63	13 93 63 00	2	Molla	Spring	Ressort	Feder
	64	13 93 66 00	2	Vite reg. valvola gas	Screw	Vis	Schraube
	65	13 93 67 00	2	Molla	Spring	Ressort	Feder
	66	13 93 28 00	4	Vite fiss. cop. valv.	Screw	Vis	Schraube
	67	55 93 29 00	4	Rondella elastica	Spring washer	Rondelle élastique	Federscheibe
	68	53 93 50 00	2	Coperchio valvola	Valve cover	Couvercle soupape	Ventildeckel
*	69		2	Guarnizione	Gasket	Joint	Dichtung
	70	12 93 72 00	2	Vite tendifilo	Screw	Vis	Schraube
	71	53 93 71 00	2	Molla	Spring	Ressort	Feder
	72	19 93 49 00	2	Spillo conico	Needle	Pointeau conique	Kon. Nadel

Seimm Moto Guzzi S.p.A. - 22054 Mandello del Lario (Co) - Tel. 731112 - 732512 - Tx: 38095 - 6/78 - 2500 K Printed in Italy

Dati indicativi soggetti a modifiche senza impegno di preavviso - All data are subject to modification without notice
Scanzorosciate (Bg)

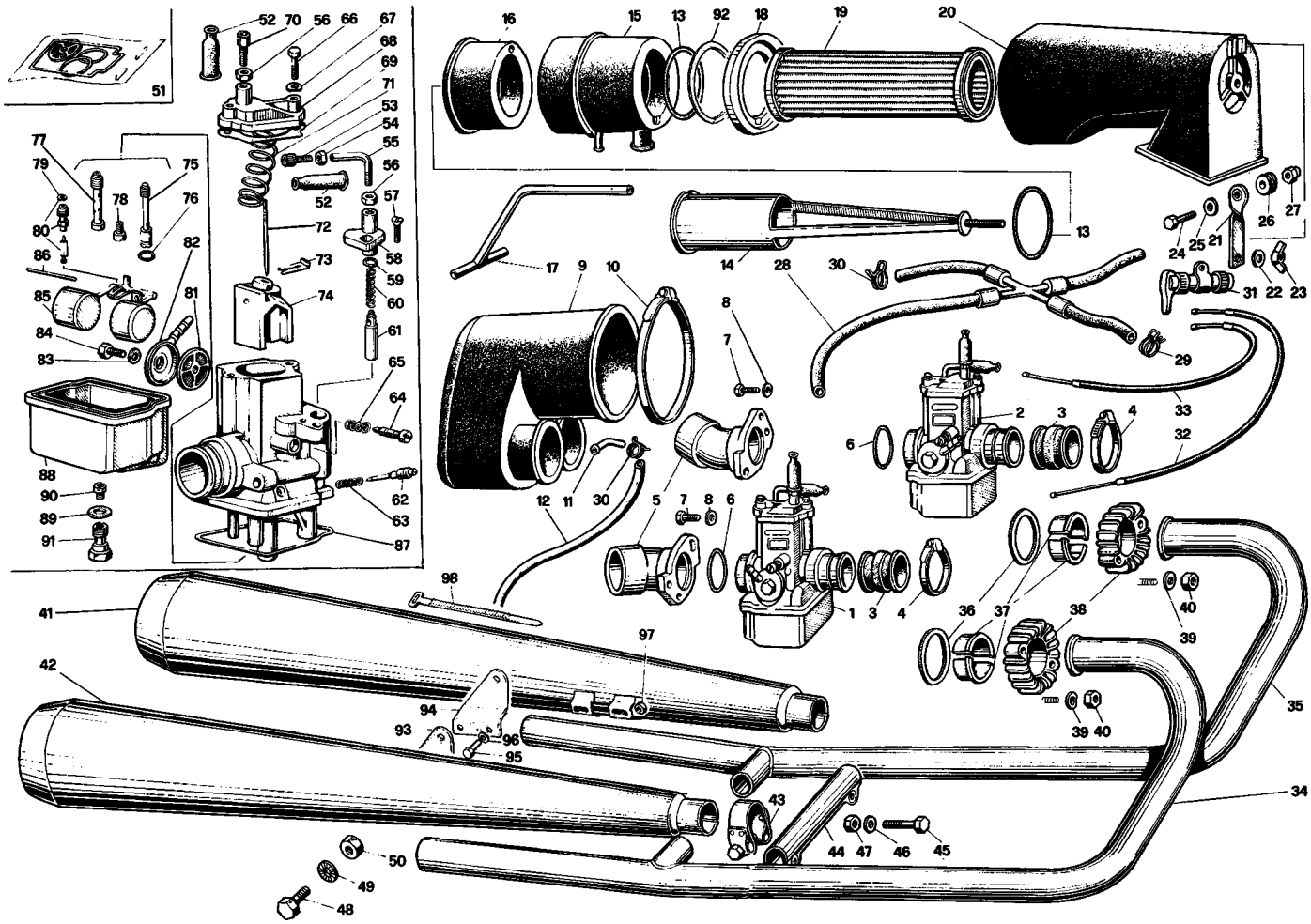

NOTE NOTES NOTES MARKE	POS. N.	N. COD. CODE No. No. CODE CODE Nr.	Q.tà Q.ty Q.té M.ge	DENOMINAZIONE	DESCRIPTION	DESIGNATION	BEZEICHNUNG
	73	55 93 85 85	2	Fermaglio	Fastener clip	Goujon	Klemme
	74	61 93 48 00	2	Valvola gas	Gas valve	Soupape de gaz	Gasventil
	75	19 93 60 00	2	Getto avviamento	Starting jet	Gicleur démarreur	Anlassvergasung
*	76		2	Guarnizione	Gasket	Joint	Dichtung
	77	19 93 55 00	2	Polverizzatore (260 AH)	Fuel nozzle (260 AH)	Pulvérisateur (260 AH)	Einspritzdüse (260 AH)
	78	19 93 59 00	2	Getto minimo	Slow running jet	Gicleur ralenti	Mind. Vergasung
*	79		2	Guarnizione	Gasket	Joint	Dichtung
	80	19 93 46 00	2	Valvola spillo	Needle valve	Soupape à aiguilles	Nadelventil
*	81		2	Filtro benzina	Fuel filter	Filtre essence	Benzinfilter
	82	35 93 46 70	2	Pipetta racc. tubo	Union	Tuyau de raccord	Pipette
*	83		2	Guarnizione	Gasket	Joint	Dichtung
	84	13 93 49 00	2	Vite	Screw	Vis	Schraube
	85	61 93 43 00	2	Galleggiante	Float	Flotteur	Schwimmer
	86	13 93 31 00	2	Perno galleggiante	Pin	Pivot	Stift
*	87		2	Guarnizione	Gasket	Joint	Dichtung
	88	10 93 44 00	2	Vaschetta	Chamber	Cuvette	Becken
*	89		2	Guarnizione tappo	Gasket	Joint	Dichtung
●	90	19 93 57 00	2	Getto massimo	Main jet	Gicleur principal	Haupduse
	91	10 93 37 00	2	Tappo fiss. vaschetta	Chamber plug	Bouchon cuvette	Beckenzapfen
	92	19 11 39 00	1	Guarnizione	Gasket	Joint	Dichtung
	93	19 12 86 00	1	Piastra per att. sil dx	Plate	Plaque	Platte
	94	19 12 87 00	1	Piastra per att. sil. sx	Plate	Plaque	Platte
	95	98 05 44 12	4	Vite fiss. piastre	Screw	Vis	Schraube
	96	61 27 03 00	4	Rosetta ondulata	Washer	Rondelle	Scheibe
	97	92 60 22 08	4	Dado	Nut	Ecrou	Mutter
	98	14 60 96 50	2	Fascetta	Clamp	Collier	Schelle

■ **Specificare le quantità in metri (1 m - 2 m - ecc.) - Indicate quantity required in meters (1 m - 2 m - etc.) Indiquer les quantités en mètres (1 m - 2 m - etc.) - Lieferbar in Meter (1 m - 2 m - etc.) bestellen**

* **I particolari contrassegnati con (*) sono componenti della Busta Guarnizioni carburatore - Items marked with (*) belong to Carburetor Gasket Set - Les pièces marquées avec (*) composent le jeu de joint carburateur - Die mit (*) gezeichneten Teile gehören dem Vergaserdichtungssatz.**

Dati indicativi soggetti a modifiche senza impegno di preavviso - All data are subject to modification without notice - Scanzorosciate (Bg)

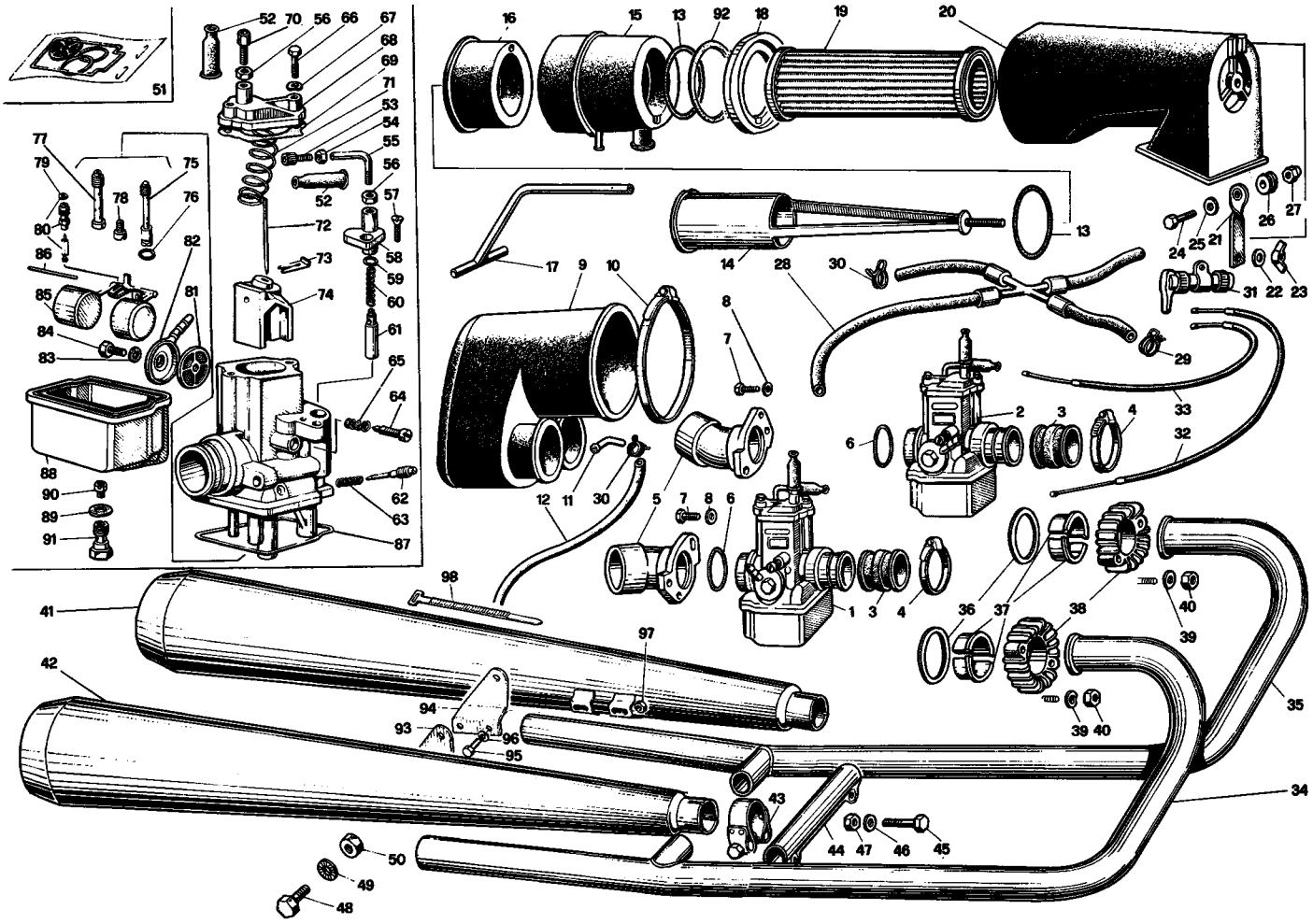

NOTE NOTES NOTES MARKE	POS. N.	N. COD. CODE No. No. CODE CODE Nr.	Q.tà Q.ty Q.té M.ge	DENOMINAZIONE	DESCRIPTION	DESIGNATION	BEZEICHNUNG

● **I sottonotati particolari rappresentano le varianti per il mod. V50**
Following items refer to V50 mod. only
Les pièces indiquées ci-dessous représentent les variantes pour le mod. V50
Die untergegebene Teile sind nur für Modell V50 gültig

1	19 11 26 50	1	Carbur. dx VHB 24	R.H. carbur. VHB 24	Carbur. D VHB 24	Vergaser R. VHB 24
2	19 11 26 51	1	Carbur. sx VHB 24	L.H. carbur. VHB 24	Carbur. G VHB 24	Vergaser L. VHB 24
90	19 93 57 50	1	Getto massimo	Main jet	Gicleur principal	Hauptduse

Seimm Moto Guzzi S.p.A. - 22054 Mandello del Lario (Co) - Tel. 731112 - 732512 - Tx: 38095 - 6/78 - 2500 K Printed in Italy

Dati indicativi soggetti a modifiche senza impegno di preavviso - All data are subject to modification without notice - Scanzorosciate (Bg)

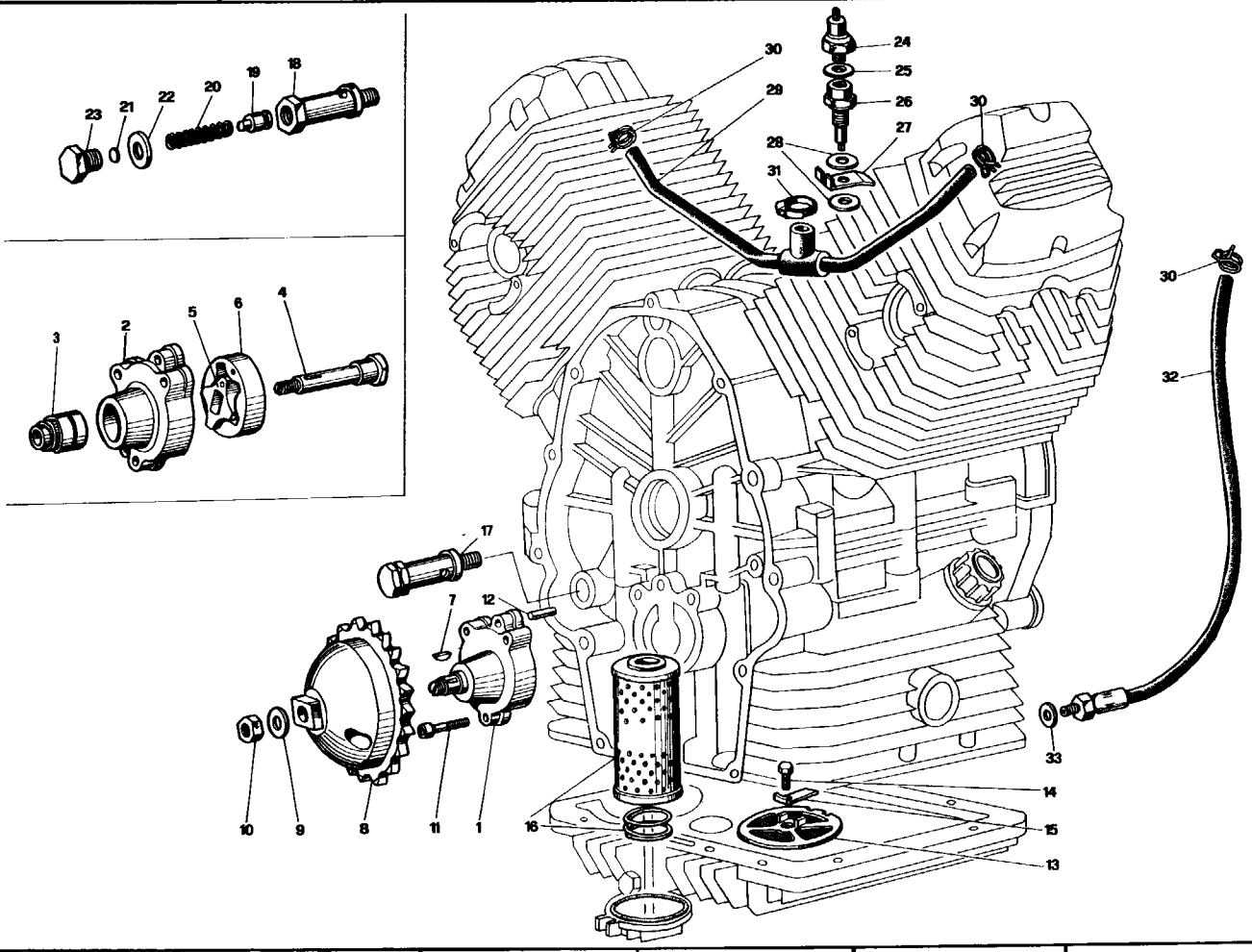

NOTE NOTES NOTES MARKE	POS. N.	N. COD. CODE No. No. CODE CODE Nr.	Q.tà Q.ty Q.té M.ge	DENOMINAZIONE	DESCRIPTION	DESIGNATION	BEZEICHNUNG
	1	19 14 64 00	1	Pompa olio con rot.	Oil pump with rotor	Pompe à huile avec rot.	Olpumpe mit Rotor
	2		1	Corpo pompa olio	Oil pump housing	Corps de pompe à huile	Olpumpegehäuse
	3	92 25 22 10	1	Cuscinetto a rullini	Needle bearing	Roulement à aiguilles	Nadellager
	4	19 14 78 00	1	Albero ingr. pompa	Pump gear shaft	Arbre engr. pompe	Pumpezahnradwelle
	5	19 14 84 00	1	Rotore interno	Inside rotor	Rotor intérieur	Innenrotor
	6	19 14 86 00	1	Rotore esterno	Outside rotor	Rotor extérieur	Aussenrotor
	7	13 14 83 00	1	Chiavetta	Key	Clavette	Keil
	8	19 14 77 00	1	Ingranaggio com. pompa	Pump driving gear	Engr. d'entr. pompe	Pumpezahnrad
	9	19 14 98 00	1	Rondella di sicurezza	Washer	Rondelle	Scheibe
	10	92 60 25 10	1	Dado	Nut	Ecrou	Mutter
	11	98 62 03 30	3	Vite	Screw	Vis	Schraube
	12	95 51 20 62	2	Spina di riferimento	Pin	Clavette	Stift
	13	19 15 22 00	1	Filtro olio a rete	Gauze	Tamis	Sieb
	14	98 05 43 14	1	Vite	Screw	Vis	Schraube
	15	95 18 70 06	1	Piastrina di sicurezza	Lock plate	Plaquette frein	Schliessblech
	16	19 15 30 00	1	Cartuccia filtro olio	Cartridge	Cartouche	Patrone
	17	10 15 82 01	1	Valvola reg. press. olio	Control valve	Clapet de décharge	Drucksteuerventil
	18	10 15 87 01	1	Corpo per valvola	Valve housing	Corps de clapet	Ventilgehäuse
	19	12 15 09 00	1	Pistone con valvola	Valve piston	Piston de clapet	Ventilkolben
	20	94 32 10 72	1	Molla	Spring	Ressort	Feder
	21	12 15 07 00	1	Fondello	Bottom disc	Rondelle butée	Verschlussscheibe
	22	95 10 05 22	1	Guarnizione	Gasket	Joint	Dichtung
	23	12 15 90 00	1	Tappo	Plug	Bouchon	Stopfen
	24	17 76 87 50	1	Trasmettitore segnal.	Oil indicator	Mano-contact	Ölanzeige
	25	12 00 64 00	1	Ranella in alluminio	Washer	Rondelle	Scheibe
	26	19 05 58 00	1	Raccordo	Union,	Raccord	Rohrverbindung
	27	19 05 59 00	1	Piastrina di sicurezza	Lock plate	Plaquette frein	Schliessblech
	28	12 00 64 00	2	Guarnizione	Gasket	Joint	Dichtung
	29	19 15 96 00	1	Tubazione sfiato	Breather	Reniflard	Entluftungsschlauch
	30	61 10 84 00	3	Fascetta	Clamp	Collier	Schelle
	31	12 15 78 00	1	Fascetta	Clamp	Collier	Schelle
	32	19 15 93 00	1	Tubaz. recupero olio	Return pipe	Tuyau de retour	Rücklaufrohr
	33	12 15 42 00	1	Ranella	Washer	Rondelle	Scheibe

Seimm Moto Guzzi S.p.A. - 22054 Mandello del Lario (Co) - Tel. 731112 - 732512 - Tx: 38095 - 6/78 - 2500 K

Printed in Italy

Dati indicativi soggetti a modifiche senza impegno di preavviso - All data are subject to modification without notice

- Scanzorosciate (Bg)

www.guzzitek.org - Revente Interdite - Revendita Vietata - Resaling Forbiden - Wiederverkauf Verboten

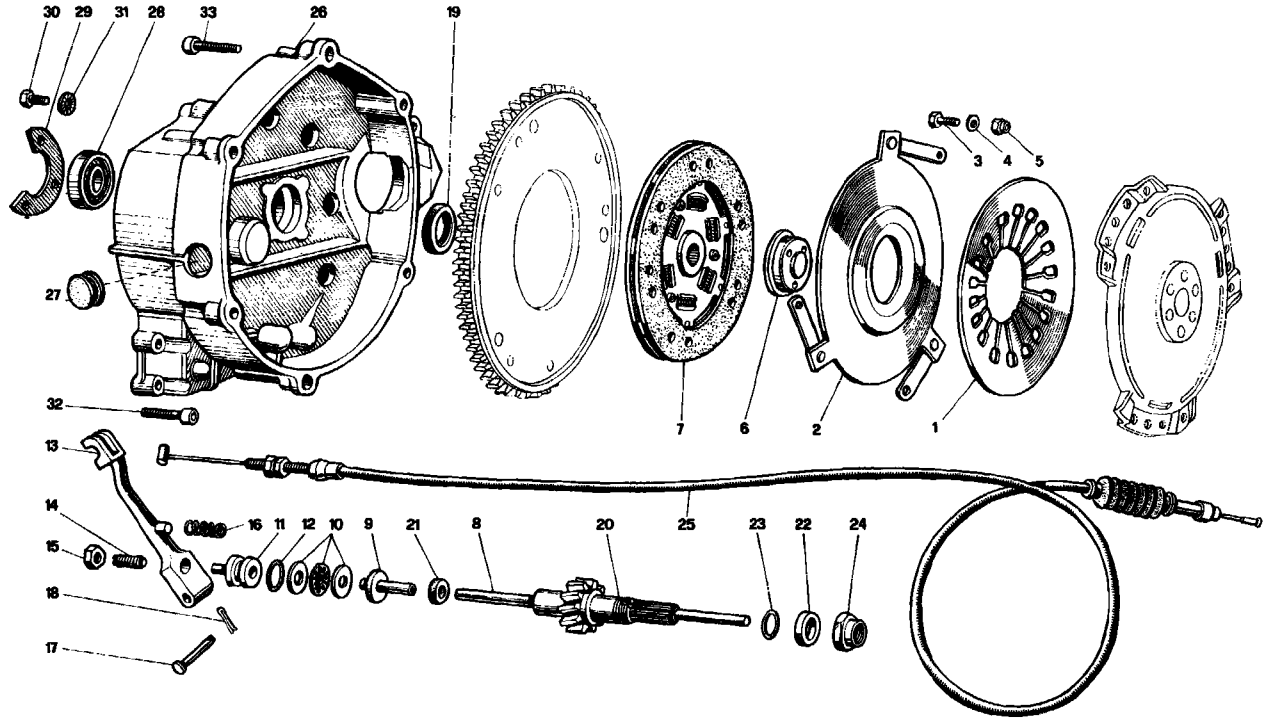

NOTE NOTES NOTES MARKE	POS. N.	N. COD. CODE No. No. CODE CODE Nr.	Q.tà Q.ty Q.té M.ge	DENOMINAZIONE	DESCRIPTION	DESIGNATION	BEZEICHNUNG
19082501	1	19 08 41 00	1	Molla a diaframma	Spring	Ressort	Feder
	2	19 08 25 00	1	Piattello spingimolla	Pressure plate	Plateau de pression	Druckplatte
	3	98 05 42 14	3	Vite	Screw	Vis	Schraube
	4	95 00 42 05	3	Rondella piana	Washer	Rondelle	Scheibe
	5	92 63 01 05	3	Dado autobloccante	Self-locking nut	Ecrou à autoblocage	Hutmutter
	6	19 08 34 01	1	Scodellino	Cup	Coupelle	Manschette
	7	19 08 44 50	1	Disco condotto	Driven disc	Disque conduit	Angetr. Scheibe
	8	19 08 57 01	1	Asta spingipiattello	Rod	Tige	Stift
	9	14 08 60 00	1	Corpo interno	Inner body	Corps intérieur	Innengehäuse
	10	12 08 70 01	1	Cuscinetto reggispinta	Thrust bearing	Butée d'embrayage	Drucklager
	11	14 08 61 00	1	Corpo esterno	Outer body	Corps extérieur	Aussengehäuse
	12	90 70 61 70	1	Anello di tenuta	Seal ring	Bague d'étanchéité	Dichtring
	13	14 09 02 01	1	Leva disinnesto friz.	Operating lever	Levier de dégagement	Ausrückhebel
	14	14 09 04 00	1	Vite registro leva	Adjusting screw	Vis de réglage	Einstellschraube
	15	92 60 25 08	1	Dado	Nut	Ecrou	Mutter
	16	94 32 11 05	1	Molla	Spring	Ressort	Feder
	17	95 78 02 71	1	Spina	Pin	Axe	Stift
	18	95 50 02 22	1	Copiglia	Cotter pin	Goupille	Splint
	19	90 40 27 36	1	Anello di tenuta	Seal ring	Bague d'étanchéité	Dichtring
•	20	19 21 07 00	1	Albero di rinvio (Z 13)	Countershaft (Z 13)	Arbre intérm. (Z 13)	Vorgelegewelle (Z 13)
	21	90 40 06 16	1	Anello di tenuta	Seal ring	Bague d'étanchéité	Dichtring
	22	19 21 37 00	1	Distanziale	Spacer	Entretoise	Distanzstück
	23	90 70 61 88	1	Anello di tenuta	Seal ring	Bague d'étanchéité	Dichtring
	24	19 35 67 00	1	Dado di sicurezza	Nut	Ecrou	Mutter
19053052	25	~~15 60 30 01~~	1	Trasmiss. com. friz.	Clutch cable	Câble d'embrayage	Kupplungskabel
	26	19 20 04 00	1	Campana frizione	Clutch housing	Boîtier d'embrayage	Kupplungslocke
	27	93 18 02 20	1	Tappo	Plug	Bouchon	Stopfen
	28	92 20 11 20	1	Cuscinetto	Bearing	Roulement	Lager
	29	19 20 34 00	1	Piastra fiss. cuscin.	Plate	Plaque	Platte
	30	98 05 43 14	3	Vite	Screw	Vis	Schraube
	31	14 21 79 01	3	Rosetta di sicurezza	Washer	Rondelle	Scheibe
	32	98 62 03 30	11	Vite	Screw	Vis	Schraube
	33	98 62 04 35	6	Vite	Screw	Vis	Schraube

Seimm Moto Guzzi S.p.A. - 22054 Mandello del Lario (Co) - Tel. 731112 - 732512 - Tx: 38095 - 6/78 - 2500 K Printed in Italy

Dati indicativi soggetti a modifiche senza impegno di preavviso - All data are subject to modification without notice

- Scanzorosciate (Bg)

www.guzzitek.org - Revente Interdite - Revendita Vietata - Resaling Forbiden - Wiederverkauf Verboten

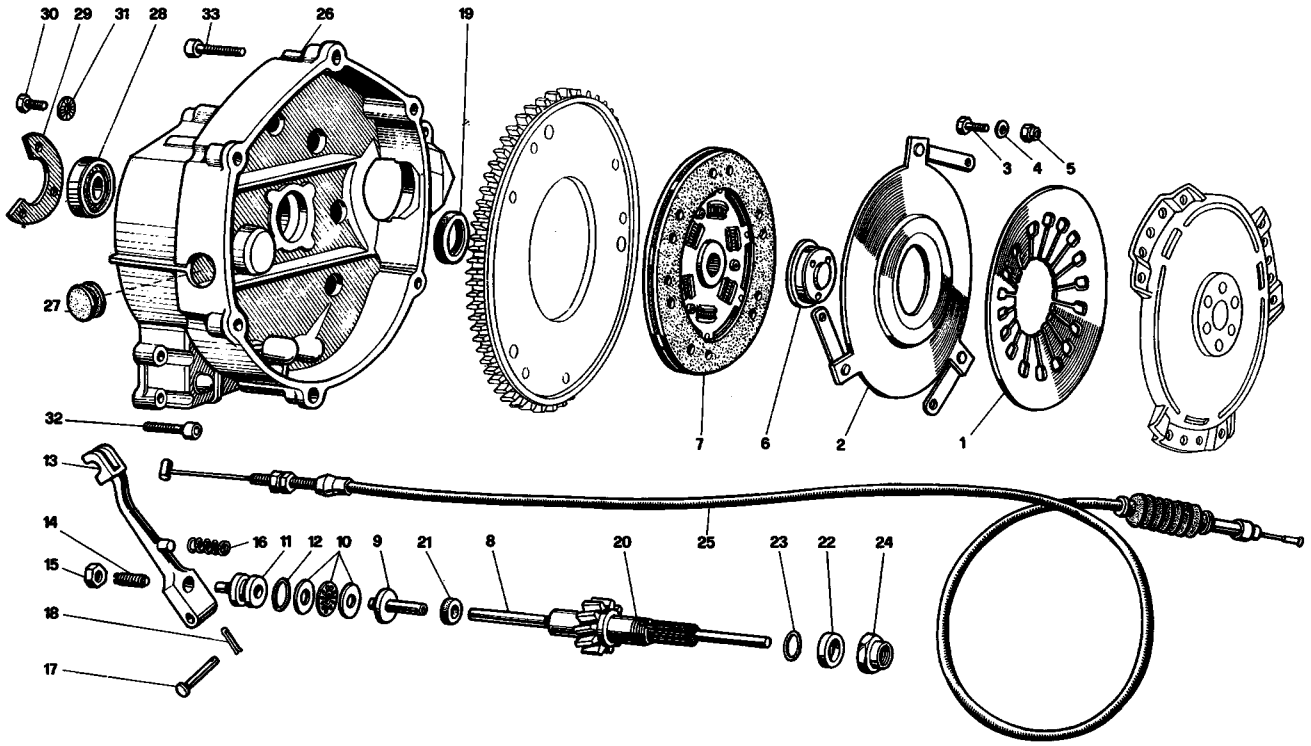

NOTE NOTES NOTES MARKE	POS. N.	N. COD. CODE No. No. CODE CODE Nr.	Q.tà Q.ty Q.té M.ge	DENOMINAZIONE	DESCRIPTION	DESIGNATION	BEZEICHNUNG
				● I sottonotati particolari rappresentano le varianti per il mod. V50 Following items refer to V50 mod. only Les pièces indiquées ci-dessous représentent les variantes pour le mod. V50 Die untergegebene Teile sind nur für Modell V50 gültig			
	20	19 21 07 50	1	Albero di rinvio (Z 14)	Countershaft (Z 14)	Arbre interm. (Z 14)	Vorgelegewelle (Z 14)

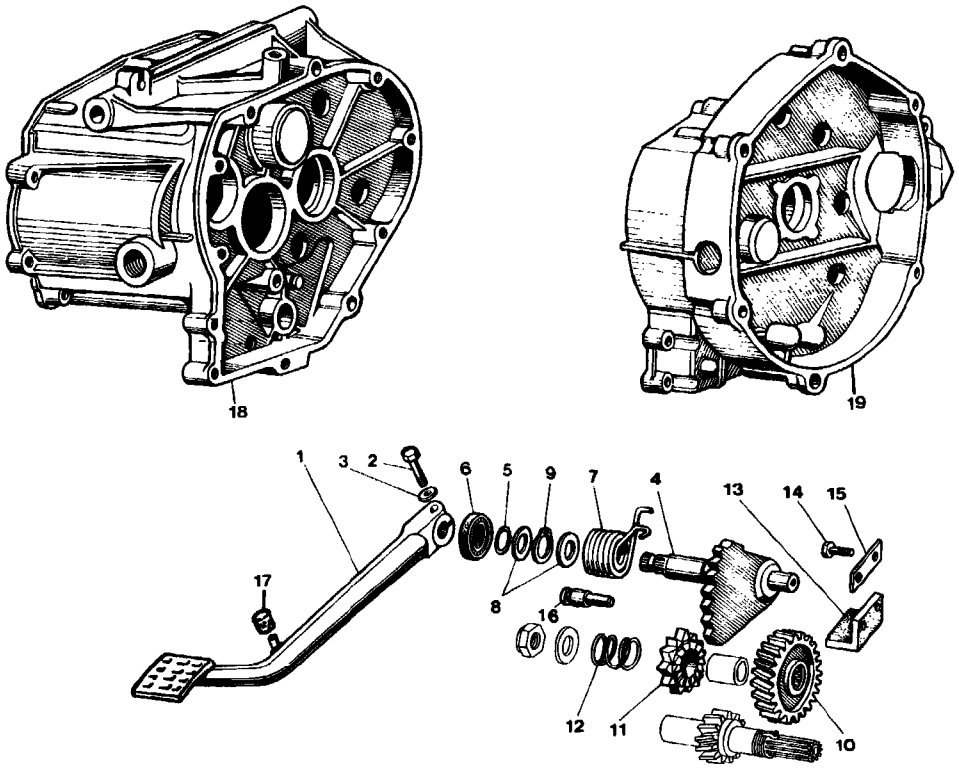

NOTE NOTES NOTES MARKE	POS. N.	N. COD. CODE No. No. CODE CODE Nr.	Q.tà Q.ty Q.té M.ge	DENOMINAZIONE	DESCRIPTION	DESIGNATION	BEZEICHNUNG
	1	19 26 03 01	1	Leva com. avviamento	Starter control lever	Levier comm. démarr.	Starthebel
	2	98 05 24 30	1	Vite fiss. leva	Screw	Vis	Schraube
	3	95 00 42 08	1	Rondella	Washer	Rondelle	Scheibe
	4	19 26 40 00	1	Settore per messa in m.	Startersector	Secteur pour démarr.	Anlassersektor
	5	90 70 61 88	1	Anello di tenuta OR	Seal ring	Bague d'étanchéité	Dichtring
	6	90 40 18 32	1	Anello di tenuta	Seal ring	Bague d'étanchéité	Dichtring
	7	61 26 57 00	1	Molla	Spring	Ressort	Feder
	8	19 03 23 00	2	Rosetta di rasamento	Washer	Rondelle	Scheibe
	9	90 27 10 18	1	Anello seeger	Snap ring	Jonc d'arrêt	Seegerring
	10	19 21 11 05	1	Ingran. rinvio A.P. (V 35 Z = 25)	O.S. intermediate gear (V 35 Z = 25)	Engren. de renvoi A.P. (V 35 Z = 25)	Zahnradvorgel, H.W. (V 35 Z = 25)
	10	19 21 11 50	1	Ingran. rinvio A.P. (V 50 Z = 23)	O.S. intermediate gear (V 50 Z = 23)	Engren. de renvoi A.P. (V 50 Z = 23)	Zahnradvorgel, H.W. (V 50 Z = 23)
	11	19 26 66 01	1	Ingranaggio per messa in moto Z = 12	Starter gear Z = 12	Engrenage pour démarr. Z = 12	Anlasszahnrad Z = 12
	12	19 26 62 00	1	Molla	Spring	Ressort	Feder
	13	19 26 33 00	1	Tassello	Block	Goujon	Stück
	14	98 05 43 14	2	Vite	Screw	Vis	Schraube
	15	19 23 59 00	1	Piastrina di sicurezza	Lock plate	Plaquette frein	Schliessblech
	16	19 20 26 00	1	Perno	Pin	Axe	Stift
	17	14 42 38 00	1	Calotta in gomma	Rubber cap	Chapeau en caoutchouc	Gummischutzmuffe
	18	19 20 02 01	1	Scatola cambio	Transmission case	Carter de boîte à vit.	Getriebegehäuse
	19	19 20 04 01	1	Campana frizione	Clutch housing	Boîtier d'embrayage	Kupplungsglocke

Seimm Moto Guzzi S.p.A. - 22054 Mandello del Lario (Co) - Tel. 731112 - 732512 - Tx: 38095 - 6/78 - 2500 K — Printed in Italy

Dati indicativi soggetti a modifiche senza impegno di preavviso - All data are subject to modification without notice — Scanzorosciate (Bg)

www.guzzitek.org - Revente Interdite - Revendita Vietata - Resaling Forbiden - Wiederverkauf Verboten

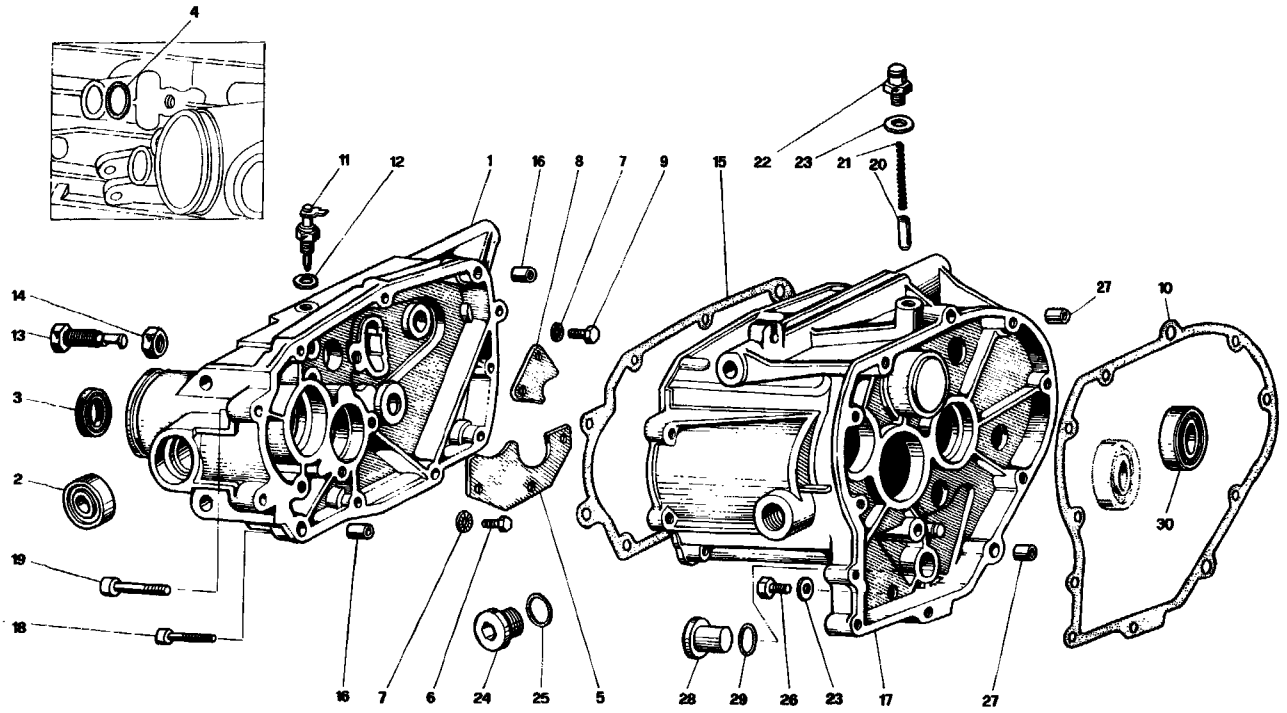

NOTE NOTES NOTES MARKE	POS. N.	N. COD. CODE No. No. CODE CODE Nr.	Q.tà Q.ty Q.té M.ge	DENOMINAZIONE	DESCRIPTION	DESIGNATION	BEZEICHNUNG
	1	19 20 08 00	1	Coperchio scatola	Transm. case cover	Couvercle du carter	Getriebedeckel
	2	92 20 42 15	2	Cuscinetto	Bearing	Roulement	Lager
	3	90 40 27 37	1	Anello di tenuta	Seal ring	Bague d'étanchéité	Dichtring
	4	90 70 61 40	1	Anello OR	Ring	Bague	Ring
	5	19 21 38 00	1	Piastra fiss. albero	Plate	Plaque	Platte
	6	98 05 43 14	3	Vite fiss. piastra	Screw	Vis	Schraube
	7	14 21 79 01	5	Rosetta di sicurezza	Washer	Rondelle	Scheibe
	8	19 23 58 00	1	Piastra fiss. albero	Plate	Plaque	Platte
	9	98 05 43 14	2	Vite	Screw	Vis	Schraube
	10	19 20 03 00	1	Guarnizione	Gasket	Joint	Dichtung
	11	19 20 72 00	1	Interruttore folle	Switch	Interrupteur	Schalter
	12	12 15 42 00	1	Guarnizione	Gasket	Joint	Dichtung
	13	19 23 78 00	1	Vite con eccentrico	Screw	Vis	Schraube
	14	92 60 25 12	1	Dado	Nut	Ecrou	Mutter
	15	19 20 11 00	1	Guarnizione	Gasket	Joint	Dichtung
	16	61 00 21 00	2	Bussola	Bush	Douille	Buchse
	17	19 20 02 00	1	Scatola cambio	Transmission case	Carter de boite à vit.	Getriebegehäuse
	18	98 62 03 30	7	Vite fiss. coperchio	Screw	Vis	Schraube
	19	98 62 04 35	4	Vite fiss. coperchio	Screw	Vis	Schraube
	20	55 23 47 00	1	Nottolino	Pawl	Rochet	Sperrlinke
	21	94 32 10 67	1	Molla	Spring	Ressort	Feder
	22	19 20 65 01	1	Tappo sfiato compl.	Vent plug, assy	Bouchon d'évent, compl.	Entlüftungsstopfen
	23	10 52 89 00	2	Guarnizione	Gasket	Joint	Dichtung
	24	19 35 12 00	1	Tappo introd. olio	Oil filler cap	Bouchon de rempl. huile	Öleinfüllstutzen
	25	90 70 62 03	1	Guarnizione	Gasket	Joint	Dichtung
	26	95 98 02 12	1	Tappo scarico olio	Oil drain plug	Bouchon de vid. huile	Ölablassschraube
	27	61 00 21 00	2	Boccola di riferim.	Bush	Douille	Buchse
*	28	19 20 41 00	1	Tappo foro	Hole plug	Bouchon de trou	Lockstopfen
	29	90 40 18 32	1	Anello di tenuta	Seal ring	Bague d'étanchéité	Dichtring
	30	92 20 11 20	1	Cuscinetto	Bearing	Roulement	Lager
●	—	19 99 15 10	1	Cambio completo e campana	Transmission assy and housing	Boîte à vitesses compl. et carter	Schaltgetriebe, kpl. und Gehäuse

* **Fornito sino ad esaurimento - Supplied until stock available - Fourni jusqu'à l'épuisement du stock - Lieferbar bis Lagerbeständer**

Seimm Moto Guzzi S.p.A. - 22054 Mandello del Lario (Co) - Tel. 731112 - 732512 - Tx: 38095 - 6/78 - 2500 K Printed in Italy

Dati indicativi soggetti a modifiche senza impegno di preavviso - All data are subject to modification without notice - Scanzorosciate (Bg)

www.guzzitek.org - Revente Interdite - Revendita Vietata - Resaling Forbiden - Wiederverkauf Verboten

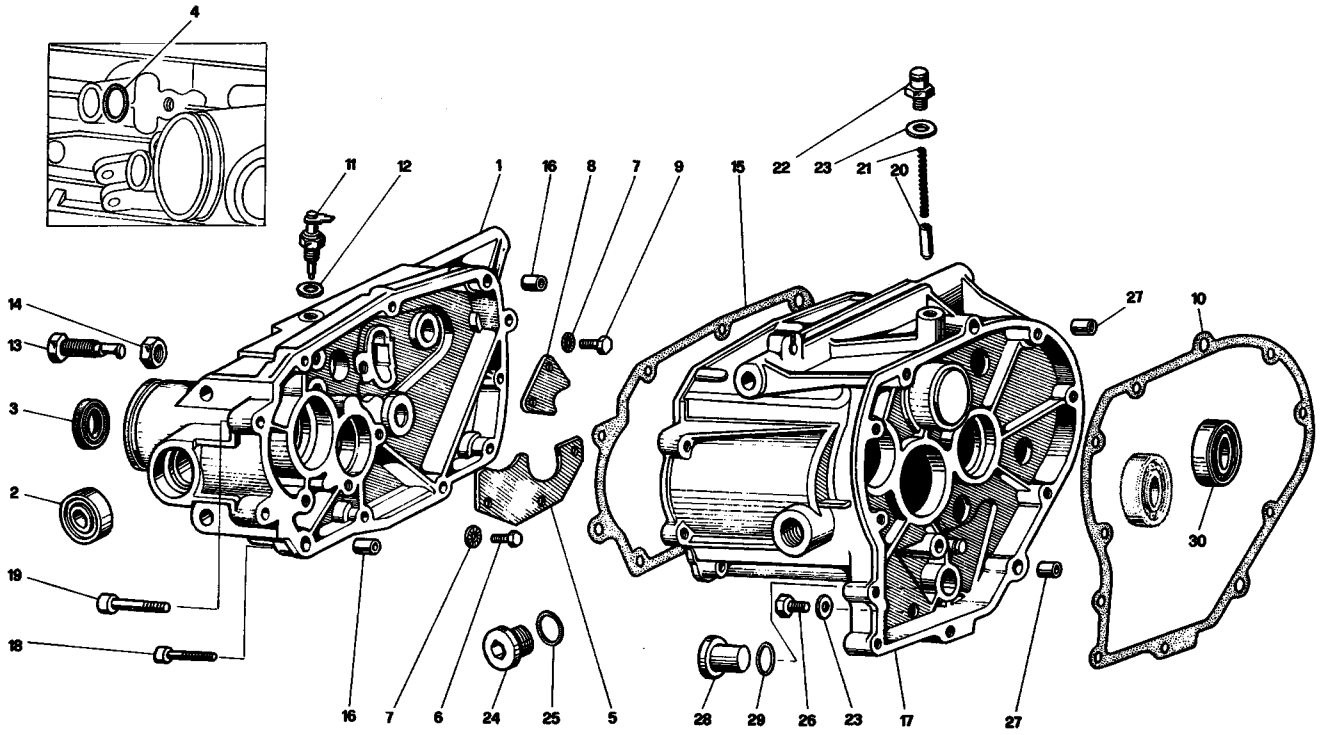

NOTE NOTES NOTES MARKE	POS. N.	N. COD. CODE No. No. CODE CODE Nr.	Q.tà Q.ty Q.té M.ge	DENOMINAZIONE	DESCRIPTION	DESIGNATION	BEZEICHNUNG

● **I sottonotati particolari rappresentano le varianti per il mod. V50**
Following items refer to V50 mod. only
Les pièces indiquées ci-dessous représentent les variantes pour le mod. V50
Die untergegebene Teile sind nur für Modell V50 gültig

—	19 99 15 50	1	Cambio completo e campana	Transmission assy and housing	Boîte à vitesses compl. et carter	Schaltgetriebe, kpl. und Gehäuse

Seimm Moto Guzzi S.p.A. - 22054 Mandello del Lario (Co) - Tel. 731112 - 732512 - Tx: 38095 - 6/78 - 2500 K Printed in Italy

Dati indicativi soggetti a modifiche senza impegno di preavviso - All data are subject to modification without notice - Scanzorosciate (Bg)

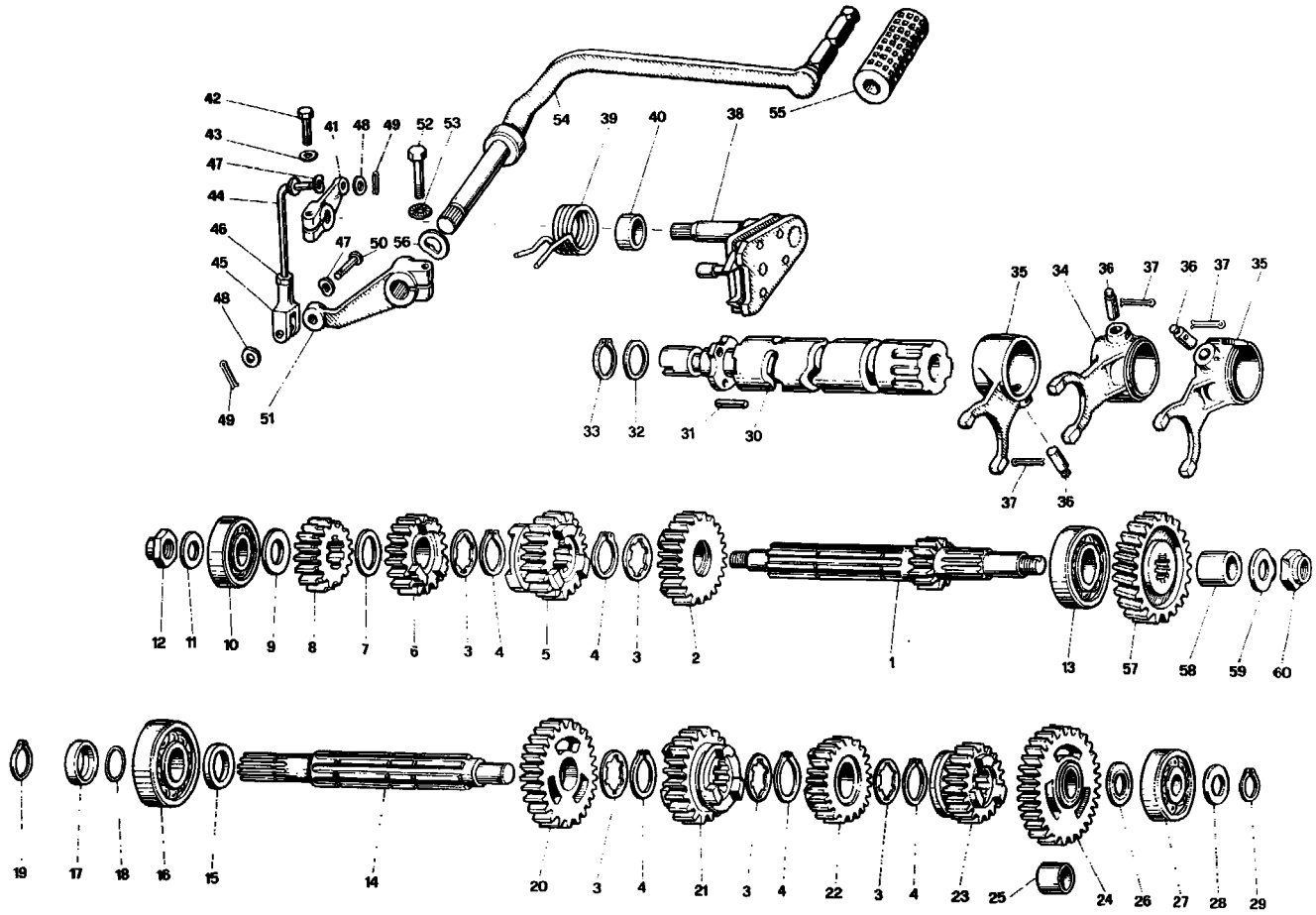

NOTE NOTES NOTES MARKE	POS. N.	N. COD. CODE No. No. CODE CODE Nr.	Q.tà Q.ty Q.té M.ge	DENOMINAZIONE	DESCRIPTION	DESIGNATION	BEZEICHNUNG
	1	19 21 05 01	2	Albero primario (Z = 11)	Main shaft (Z = 11)	Arbre primaire (Z = 11)	Antriebwelle (Z = 11)
	2	19 21 20 00	1	Ingranaggio 5a A.P. (Z = 22)	5th gear M.S. (Z = 22)	Pignon 5ème A.P. (Z = 22)	An.W. Schalt. 5. Gang (Z = 22)
	3	39 21 54 00	5	Rosetta di rasamento	Washer	Rondelle	Scheibe
	4	90 27 11 23	5	Anello seeger	Ring	Jonc d'arrêt	Seegerring
	5	19 21 18 00	1	Ingranaggio 4a A.P. (Z = 22)	4th gear M.S. (Z = 22)	Pignon 4ème A.P. (Z = 22)	An.W. Schaltr. 4. Gang (Z = 22)
	6	19 21 14 00	1	Ingranaggio 3a A.P. (Z = 18)	3rd gear M.S. (Z = 18)	Pignon 3ème A.P. (Z = 18)	An.W. Schaltr. 3. Gang (Z = 18)
	7	19 21 46 00	1	Rosetta di rasamento	Washer	Rondelle	Scheibe
	8	19 21 13 00	1	Ingranaggio 2a A.P. (Z = 15)	2nd gear M.S. (Z = 15)	Pignon 2ème A.P. (Z = 15)	An.W. Schaltr. 2. Gang (Z = 15)
	9	19 21 28 00	1	Rosetta di spallamento	Washer	Rondelle	Scheibe
	10	92 20 14 15	1	Cuscinetto	Bearing	Roulement	Lager
	11	39 23 81 00	1	Rosetta di spallamento	Washer	Rondelle	Scheibe
	12	10 05 41 00	1	Dado	Nut	Ecrou	Mutter
	13	92 20 12 20	1	Cuscinetto	Bearing	Roulement	Lager
	14	19 21 36 00	1	Albero secondario	Layshaft	Arbre sécondaire	Abtriebwelle
	15	19 21 29 00	1	Distanziale	Spacer	Entretoise	Distanzstück
	16	92 20 12 20	1	Cuscinetto	Bearing	Roulement	Lager
	17	19 21 37 00	1	Distanziale	Spacer	Entretoise	Distanzstück
	18	90 70 61 88	1	Anello OR	Ring	Bague	Ring
	19	90 27 11 21	1	Anello Seeger	Ring	Jonc d'arrêt	Seegerring
	20	19 21 45 00	1	Ingranaggio 2a A.S. (Z = 26)	2nd gear L.S. (Z = 26)	Pignon 2ème A.S. (Z = 26)	Ab.W. Schaltr. 2. Gang (Z = 26)
	21	19 21 48 00	1	Ingranaggio 3a A.S. (Z = 23)	3rd gear A.S. (Z = 23)	Pignon 3ème A.S. (Z = 23)	Ab.W. Schaltr. 3. Gang (Z = 23)
	22	19 21 51 00	1	Ingranaggio 4a A.S. (Z = 23)	4th gear L.S. (Z = 23)	Pignon 4ème A.S. (Z = 23)	Ab.W. Schaltr. 4. Gang (Z = 23)
	23	19 21 52 00	1	Ingranaggio 5a A.S. (Z = 20)	5th gear L.S. (Z = 20)	Pignon 5ème A.S. (Z = 20)	Ab.W. Schaltr. 5. Gang (Z = 20)
	24	19 21 40 00	1	Ingranaggio 1a A.S. (Z = 30)	1st gear L.S. (Z = 30)	Pignon 1ère A.S. (Z = 30)	Ab.W. Schaltr. 1. Gang (Z = 30)
	25	19 21 41 00	1	Boccola	Bush	Douille	Buchse
	26	43 07 09 40	1	Rosetta di spallam.	Washer	Rondelle	Scheibe
	27	92 20 14 15	1	Cuscinetto	Bearing	Roulement	Lager
	28	39 23 93 00	1	Rosetta di spallam.	Washer	Rondelle	Scheibe

Seimm Moto Guzzi S.p.A. - 22054 Mandello del Lario (Co) - Tel. 731112 - 732512 - Tx: 38095 - 6/78 - 2500 K Printed in Italy

Dati indicativi soggetti a modifiche senza impegno di preavviso - All data are subject to modification without notice Scanzorosciate (Bg)

www.guzzitek.org - Revente Interdite - Revendita Vietata - Resaling Forbiden - Wiederverkauf Verboten

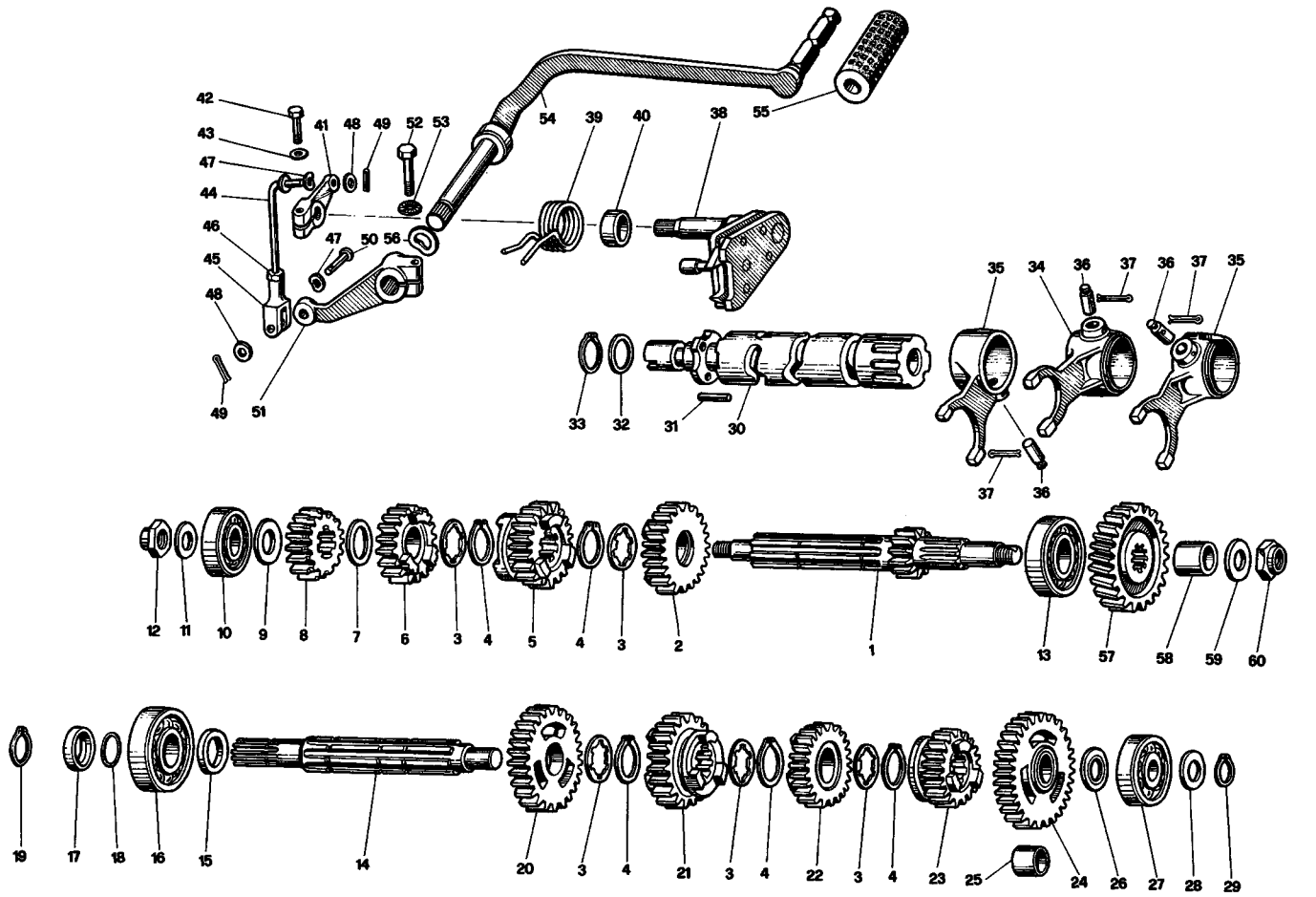

NOTE NOTES NOTES MARKE	POS. N.	N. COD. CODE No. No. CODE CODE Nr.	Q.tà Q.ty Q.té M.ge	DENOMINAZIONE	DESCRIPTION	DESIGNATION	BEZEICHNUNG
	29	90 27 11 15	1	Anello Seeger	Ring	Bague	Seegerring
	30	19 23 44 00	1	Albero desmodromico	Splined shaft	Arbre desmodrom.	Keilwelle
	31	19 23 46 00	4	Pioli	Pin	Goupille	Stift
	32	19 35 53 00	,1	Rosetta di spallam.	Washer	Rondelle	Scheibe
	33	90 27 10 20	1	Anello Seeger	Ring	Bague	Seegerring
	34	19 23 12 00	1	Forcellino per A.P.	M.S. fork	Axe de fourch. A.P.	An.W. Schaltgabel
	35	19 23 10 00	2	Forcellino per A.S.	L.S. fork	Axe de fourch. A.S.	Ab.W. Schaltgabel
	36	39 23 52 00	3	Rullo	Roller	Rouleau	Walze
	37	95 40 13 20	3	Copiglia	Cotter pin	Goupille	Splint
	38	19 23 62 00	1	Preselettore compl.	Preselection, compl.	Présélecteur compl.	Vorwall, kpl.
	39	61 23 82 00	1	Molla	Spring	Ressort	Feder
	40	91 18 20 10	1	Boccola	Bush	Douille	Buchse
	41	19 25 82 00	1	Leva com. preselettore	Lever	Levier	Hebel
	42	98 05 23 25	1	Vite	Screw	Vis	Schraube
	43	95 02 11 06	1	Rosetta	Washer	Rondelle	Scheibe
	44	19 25 78 00	1	Tirante	Rod	Tige	Schaltstange
	45	12 62 68 00	1	Forcellino	Fork	Fourchette	Gabel
	46	92 60 22 06	1	Dado	Nut	Ecrou	Mutter
	47	95 12 91 10	2	Ranella antivibrante	Washer	Rondelle	Scheibe
	48	95 00 42 06	1	Ranella piana	Washer	Rondelle	Scheibe
	49	95 50 02 22	2	Copiglia	Cotter pin	Goupille	Splint
	50	95 78 02 65	1	Spina per forcellino	Pin	Axe	Stift
	51	19 25 69 00	1	Leva di rinvio	Lever	Levier	Hebel
	52	98 05 23 25	1	Vite	Screw	Vis	Schraube
	53	95 02 11 06	1	Ranella	Washer	Rondelle	Scheibe
	54	19 25 09 00	1	Leva cambio	Transmission lever	Levier de boîte à vit.	Schalthebel
	55	14 25 10 01	1	Pedalino gomma	Rubber protection	Couvre-pédale	Gummiüberzug
	56	95 12 92 60	1	Ranella elastica	Spring washer	Rondelle élastique	Federscheibe
●	57	19 21 11 01	1	Ingranaggio rinvio A.P. (Z = 24)	Idle gear M.S. (Z = 24)	Pignon intermédiaire (Z = 24)	Zahnradvorgelege (Z = 24)
	58	19 26 67 00	1	Boccola	Bush	Douille	Buchse
	59	39 23 81 00	1	Rosetta di spallam.	Washer	Rondelle	Scheibe
	60	10 05 41 00	1	Dado	Nut	Ecrou	Mutter

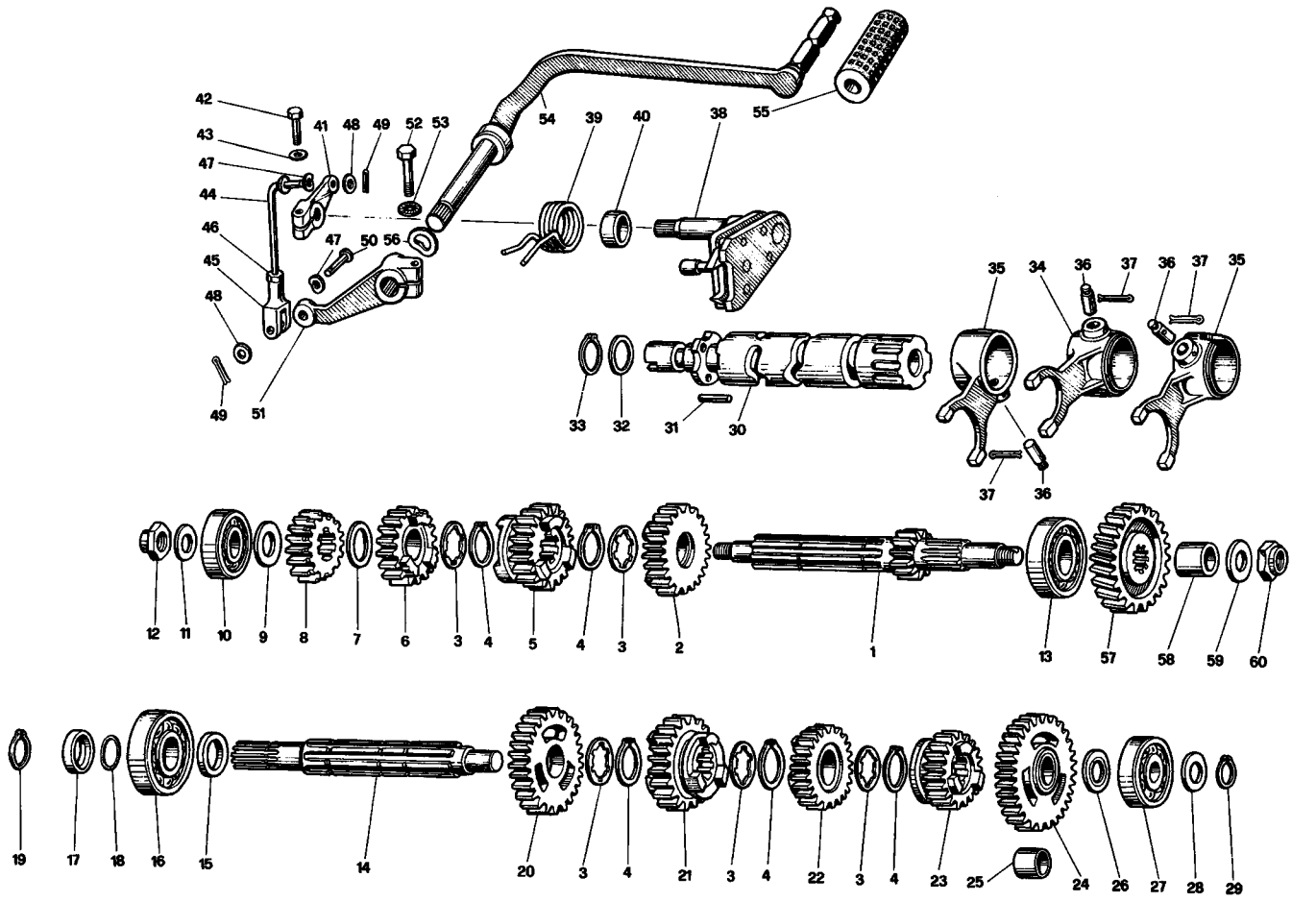

NOTE NOTES NOTES MARKE	POS. N.	N. COD. CODE No. No. CODE CODE Nr.	Q.tà Q.ty Q.té M.ge	DENOMINAZIONE	DESCRIPTION	DESIGNATION	BEZEICHNUNG

● **I sottonotati particolari rappresentano le varianti per il mod. V50**
Following items refer to V50 mod. only
Les pièces indiquées ci-dessous représentent les variantes pour le mod. V50
Die untergegebene Teile sind nur für Modell V50 gültig

57	19 21 11 51	1	Ingranaggio rinvio A.P. (Z = 23)	Idle gear M. S. (Z = 23)	Pignon intermédiaire (Z = 23)	Zahnradvorgelege (Z = 23)

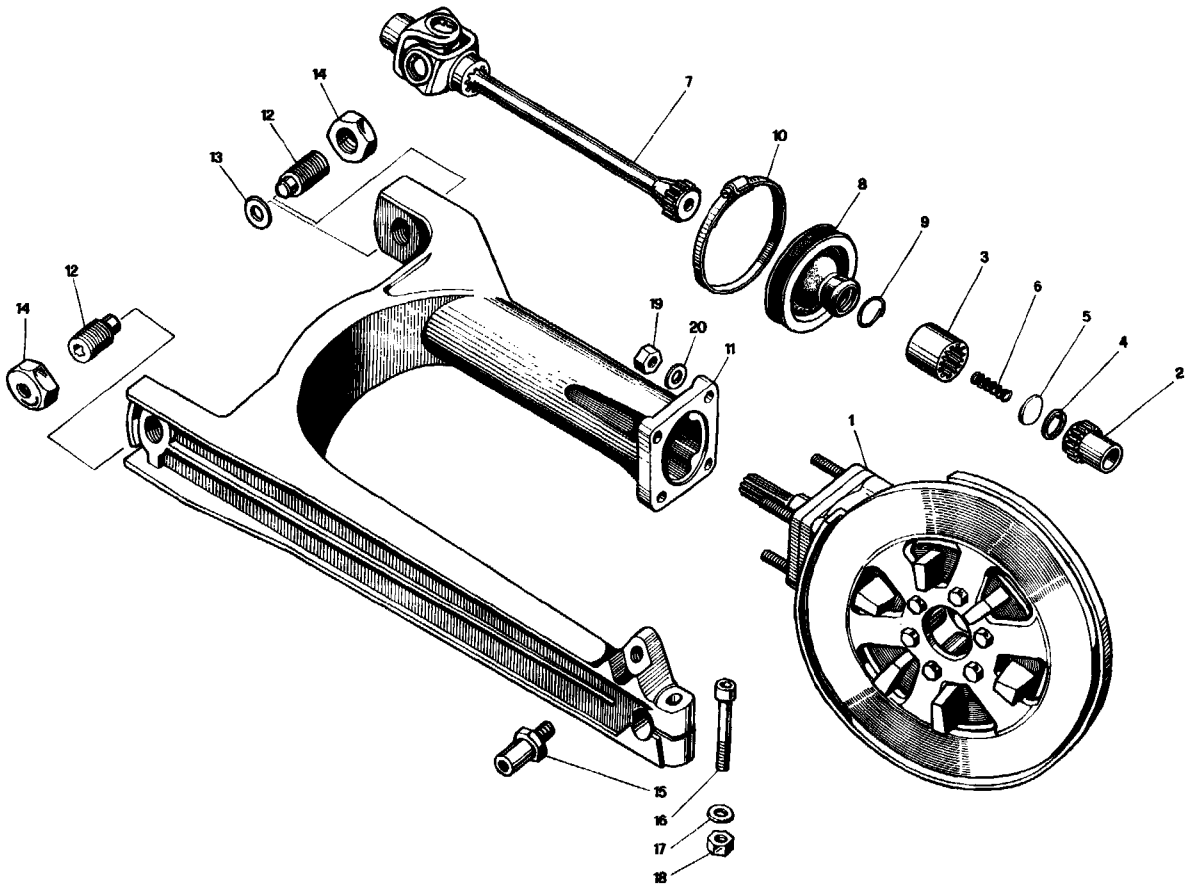

NOTE NOTES NOTES MARKE	POS. N.	N. COD. CODE No. No. CODE CODE Nr.	Q.tà Q.ty Q.té M.ge	DENOMINAZIONE	DESCRIPTION	DESIGNATION	BEZEICHNUNG
	1	19 35 02 00	1	Scatola trasmiss. comp.	Transmission compl.	Carter de transm. compl.	K.übertragungsgehäuse
	2	19 32 77 01	1	Manicotto	Sleeve	Manchon	Manschette
	3	19 32 88 01	1	Manicotto collegam.	Sleeve	Manchon	Manschette
	4	90 27 20 23	1	Anello Seeger	Circlip	Jonc d'arrêt	Seegerring
	5	19 32 76 01	1	Dischetto	Disc	Disque	Scheibe
	6	94 32 10 99	1	Molla	Spring	Ressort	Feder
	7	19 32 80 01	1	Giunto cardanico	Joint	Joint	Verbindung
	8	19 54 80 01	1	Soffietto di protez.	Bellows	Soufflet	Faltenbag
	9	19 54 81 01	1	Molla	Spring	Ressort	Feder
	10	12 54 82 01	1	Fascetta	Clamp	Collier	Schelle
	11	19 54 02 00	1	Forcellone oscillante	Rear fork	Fourche AR	Hintergabel
	12	19 54 70 00	2	Perno	Pin	Goujon	Stift
	13	35 21 43 00	1	Rondella di spessore	Washer	Rondelle	Scheibe
	14	14 54 78 00	2	Dado	Nut	Ecrou	Mutter
	15	19 55 52 00	1	Perno fiss. sospens.	Pin	Goujon	Stift
	16	98 05 25 50	1	Vite	Screw	Vis	Schraube
	17	95 00 42 10	1	Ranella	Washer	Rondelle	Scheibe
	18	92 60 22 10	1	Dado	Nut	Ecrou	Mutter
	19	92 78 10 81	4	Dado cieco	Nut	Ecrou	Mutter
	20	14 61 59 01	4	Ranella	Washer	Rondelle	Scheibe

Seimm Moto Guzzi S.p.A. - 22054 Mandello del Lario (Co) - Tel. 731112 - 732512 - Tx: 38095 - 6/78 - 2500 K Printed in Italy

Dati indicativi soggetti a modifiche senza impegno di preavviso - All data are subject to modification without notice

- Scanzorosciate (Bg)

www.guzzitek.org - Revente Interdite - Revendita Vietata - Resaling Forbiden - Wiederverkauf Verboten

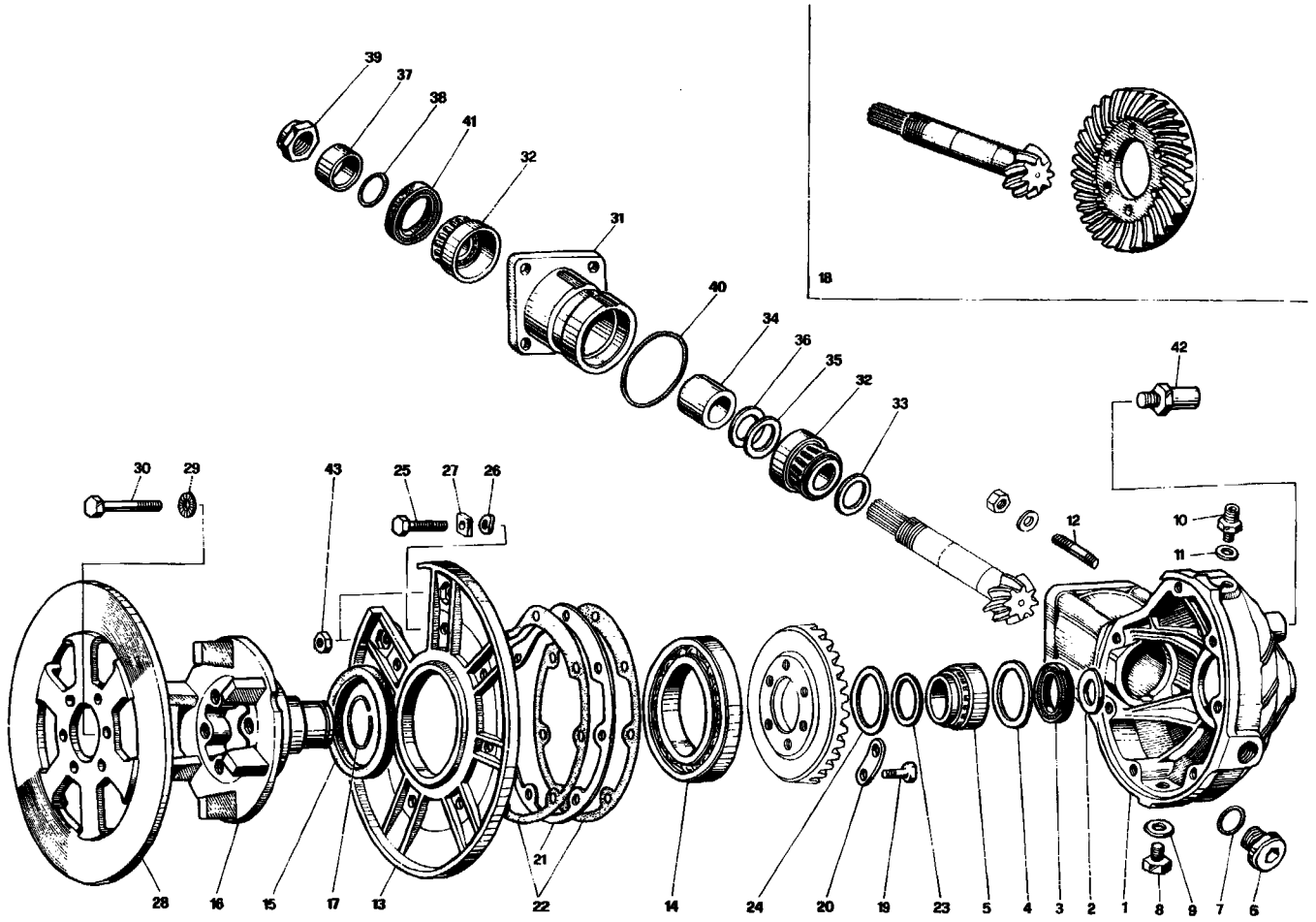

NOTE NOTES NOTES MARKE	POS. N.	N. COD. CODE No. No. CODE CODE Nr.	Q.tà Q.ty Q.té M.ge	DENOMINAZIONE	DESCRIPTION	DESIGNATION	BEZEICHNUNG
	1	19 35 03 00	1	Scatola trasmiss. nuda	Transmiss. housing	Carter de transmission	K.übertragungsgehäuse
	2	19 35 19 00	1	Rondella di spallam.	Washer	Rondelle	Scheibe
	3	90 40 35 47	1	Anello di tenuta	Seal ring	Bague d'étanchéité	Dichtring
	4	19 35 11 00	1	Rondella di spallam.	Washer	Rondelle	Scheibe
	5	92 25 22 35	1	Cuscinetto a rulli	Roller bearing	Roulement à rouleaux	Rollenlager
	6	19 35 12 00	1	Tappo livello olio	Oil level plug	Bouchon d'huile	Ölstandpfopfen
	7	90 70 62 03	1	Guarnizione	Gasket	Joint	Dichtung
	8	95 98 02 12 4	1	Tappo scarico olio	Oil drain plug	Bouchon de vid. huile	Ölablassschraube
	9	10 52 89 00	1	Rondella alluminio	Washer	Rondelle	Scheibe
	10	19 20 65 01	1	Tappo sfiato compl.	Breather	Reniflard	Entluftungsschlauch
	11	10 52 89 00	1	Guarnizione	Gasket	Joint	Dichtung
	12	96 50 80 45	4	Prigioniero	Stud bolt	Goujon	Stiftschraube
	13	19 35 04 01	1	Coperchio	Cover	Couvercle	Deckel
	14	92 20 10 70	1	Cuscinetto a sfere	Ball bearing	Roulement à billes	Kugellager
	15	90 40 75 90	1	Anello di tenuta	Seal ring	Bague d'étanchéité	Dichtring
	16	19 35 14 01	1	Perno	Pin	Goujon	Stift
	17	90 35 30 30	1	Anello di fermo	Retaining ring	Bague d'arrêt	Sperring
	18	19 35 46 92	1	Coppia conica (Z = 8/31)	Bevel gear (Z = 8/31)	Couple conique (Z = 8/31)	Telleradsatz (Z = 8/31)
	19	12 06 77 01	6	Vite fiss. corona	Screw	Vis	Schraube
	20	19 35 64 00	3	Piastrina di sicurezza	Lock plate	Plaquette frein	Schliessblech
	21	19 35 54 00	1	Spessore di regolazione mm 0,8	Shim mm 0.8	Cale d'épaisseur mm 0,8	Ausgleichscheibe mm 0,8
	21	19 35 54 02	1	Spessore di regolazione mm 0,9	Shim mm 0.9	Cale d'épaisseur mm 0,9	Ausgleichscheibe mm 0,9
	21	19 35 54 04	1	Spessore di regolazione mm 1	Shim mm 1	Cale d'épaisseur mm 1	Ausgleichscheibe mm 1
	21	19 35 54 06	1	Spessore di regolazione mm 1,1	Shim mm 1.1	Cale d'épaisseur mm 1,1	Ausgleichscheibe mm 1,1
	21	19 35 54 08	1	Spessore di regolazione mm 1,2	Shim mm 1.2	Cale d'épaisseur mm 1,2	Ausgleichscheibe mm 1,2
	21	19 35 54 10	1	Spessore di regolazione mm 1,3	Shim mm 1.3	Cale d'épaisseur mm 1,3	Ausgleichscheibe mm 1,3
	21	19 35 54 11	1	Spessore di regolazione mm 1,4	Shim mm 1.4	Cale d'épaisseur mm 1,4	Ausgleichscheibe mm 1,4
	21	19 35 54 12	1	Spessore di regolazione mm 1,5	Shim mm 1.5	Cale d'épaisseur mm 1,5	Ausgleichscheibe mm 1,5

Seimm Moto Guzzi S.p.A. - 22054 Mandello del Lario (Co) - Tel. 731112 - 732512 - Tx: 38095 - 6/78 - 2500 K Printed in Italy

Dati indicativi soggetti a modifiche senza impegno di preavviso - All data are subject to modification without notice

Scanzorosciate (Bg)

www.guzzitek.org - Revente Interdite - Revendita Vietata - Resaling Forbiden - Wiederverkauf Verboten

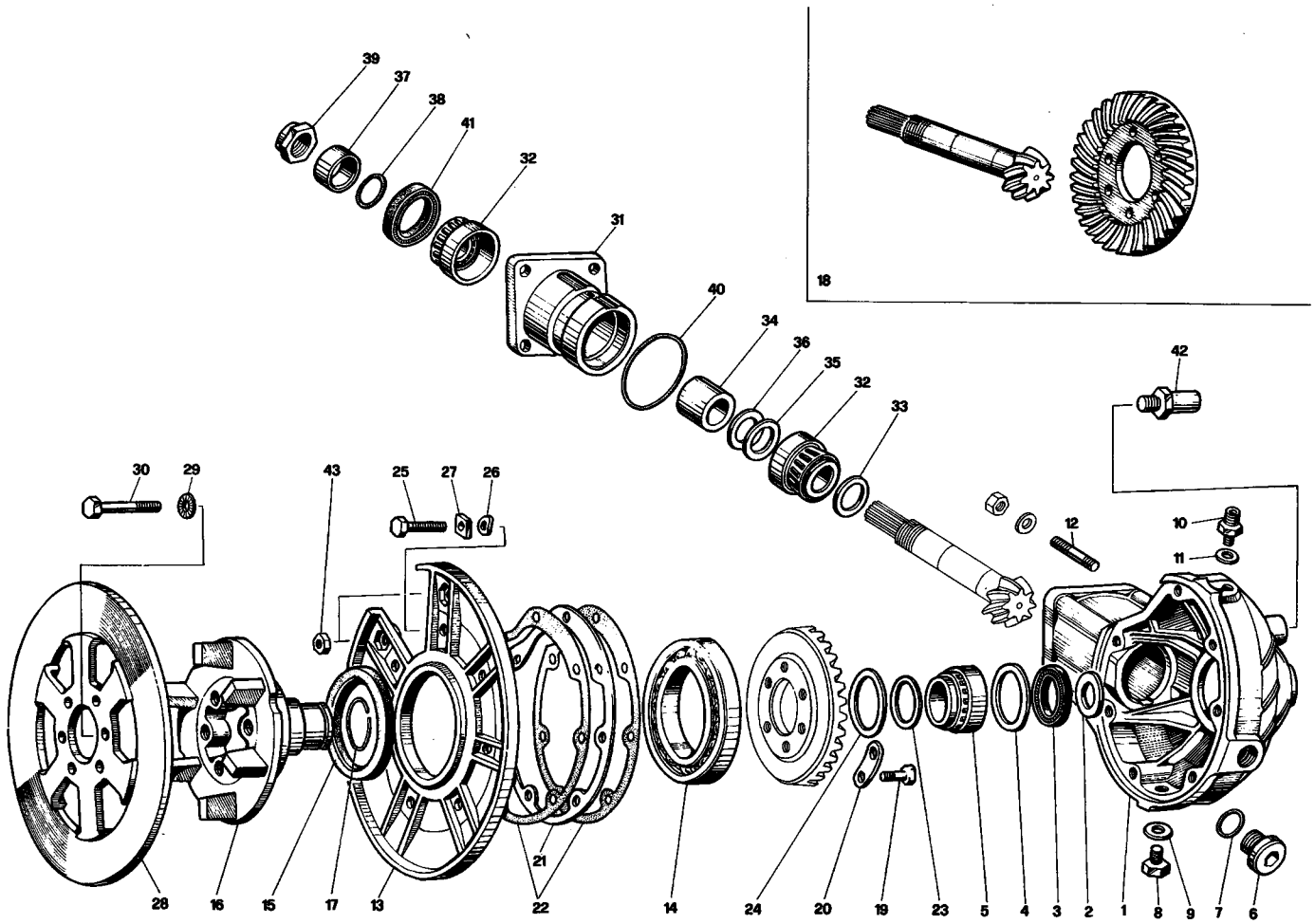

NOTE NOTES NOTES MARKE	POS. N.	N. COD. CODE No. No. CODE CODE Nr.	Q.tà Q.ty Q.té M.ge	DENOMINAZIONE	DESCRIPTION	DESIGNATION	BEZEICHNUNG
	21	19 35 54 13	1	Spessore di regolazione mm 1,6	Shim mm 1.6	Cale d'épaisseur mm 1,6	Ausgleichscheibe mm 1,6
	22	19 35 07 00	2	Guarnizione	Gasket	Joint	Dichtung
	23	19 35 23 00	1	Rondella di rasam.	Washer	Rondelle	Scheibe
	24	19 35 35 00	1	Rondella di rasam.	Washer	Rondelle	Scheibe
	25	98 05 44 25	7	Vite fiss. coperchio	Screw	Vis	Schraube
	26	61 27 03 00	7	Rosetta elast. ondul.	Tooth washer	Rondelle dentée	Zahnscheibe
	27	95 18 70 08	7	Piastrina di sicurezza	Lock plate	Plaquette frein	Schliessblech
	28	19 63 57 00	1	Disco freno poster.	Rear brake disc	Disque frein AR	Hint. Bremsescheibe
	29	14 61 59 01	6	Rondella di sicurezza	Washer	Rondelle	Scheibe
	30	98 05 44 18	6	Vite fiss. disco	Screw	Vis	Schraube
	31	19 35 24 01	1	Custodia	Flange	Flasque	Flansch
	32	92 24 92 20	2	Cuscinetto a rulli	Roller bearing	Roulement à rouleaux	Rollenlager
	33	19 35 53 00	1-2	Spessore per pignone mm 1	Pinion shim mm 1	Cale d'épaisseur mm 1	Ausgleichscheibe mm 1
	33	19 35 53 01	1-2	Spessore per pignone mm 1,1	Pinion shim mm 1.1	Cale d'épaisseur mm 1,1	Ausgleichscheibe mm 1,1
	33	19 35 53 02	1-2	Spessore per pignone mm 1,2	Pinion shim mm 1.2	Cale d'épaisseur mm 1,2	Ausgleichscheibe mm 1,2
	33	19 35 53 03	1-2	Spessore per pignone mm 1,3	Pinion shim mm 1.3	Cale d'épaisseur mm 1,3	Ausgleichscheibe mm 1,3
	33	19 35 53 04	1-2	Spessore per pignone mm 1,4	Pinion shim mm 1.4	Cale d'épaisseur mm 1,4	Ausgleichscheibe mm 1,4
	33	19 35 53 03	1-2	Spessore per pignone mm 1,5	Pinion shim mm 1.5	Cale d'épaisseur mm 1,5	Ausgleichscheibe mm 1,5
	33	19 35 53 06	1-2	Spessore per pignone mm 1,6	Pinion shim mm 1.6	Cale d'épaisseur mm 1,6	Ausgleichscheibe mm 1,6
	33	19 35 53 07	1-2	Spessore per pignone mm 1,7	Pinion shim mm 1.7	Cale d'épaisseur mm 1,7	Ausgleichscheibe mm 1,7
	33	19 35 53 08	1-2	Spessore per pignone mm 1,8	Pinion shim mm 1.8	Cale d'épaisseur mm 1,8	Ausgleichscheibe mm 1,8
	33	19 35 53 09	1-2	Spessore per pignone mm 1,9	Pinion shim mm 1.9	Cale d'épaisseur mm 1,9	Ausgleichscheibe mm 1,9
	34	19 35 51 00	1	Distanziale	Spacer	Entretoise	Distanzstück
	35	19 35 52 00	1-2	Rosetta regolazione mm 0,1	Shim mm 0.1	Rondelle d'ajustement mm 0,1	Passscheibe mm 0,1
	36	19 35 52 02	1-11	Rosetta regolazione mm 0,15	Shim mm 0.15	Rondelle d'ajustement mm 0,15	Passscheibe mm 0,15

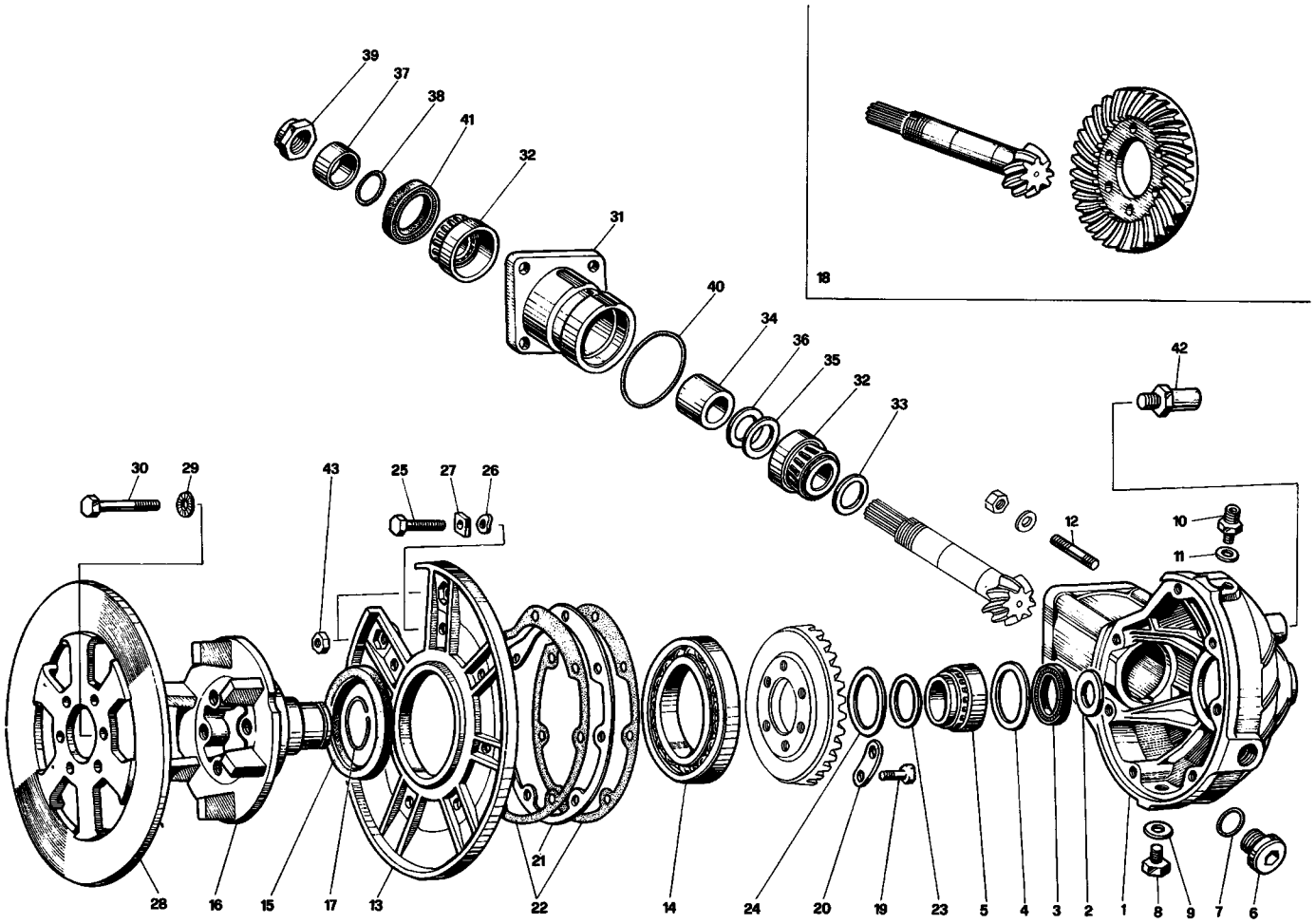

NOTE NOTES NOTES MARKE	POS. N.	N. COD. CODE No. No. CODE CODE Nr.	Q.tà Q.ty Q.té M.ge	DENOMINAZIONE	DESCRIPTION	DESIGNATION	BEZEICHNUNG
	37	19 35 68 01	1	Distanziale	Spacer	Entretoise	Distanzstück
	38	90 70 61 88	1	Anello di tenuta	Seal ring	Bague d'étanchéité	Dichtring
	39	19 35 67 00	1	Dado bloccaggio	Nut	Ecrou	Mutter
	40	90 70 65 52	1	Guarnizione	Gasket	Joint	Dichtung
	41	90 40 32 47	1	Anello di tenuta	Seal ring	Bague d'étanchéité	Dichtring
	42	19 55 52 00	1	Perno fiss. sospens.	Pin	Goujon	Stift
	43	92 60 22 08	2	Dado	Nut	Ecrou	Mutter

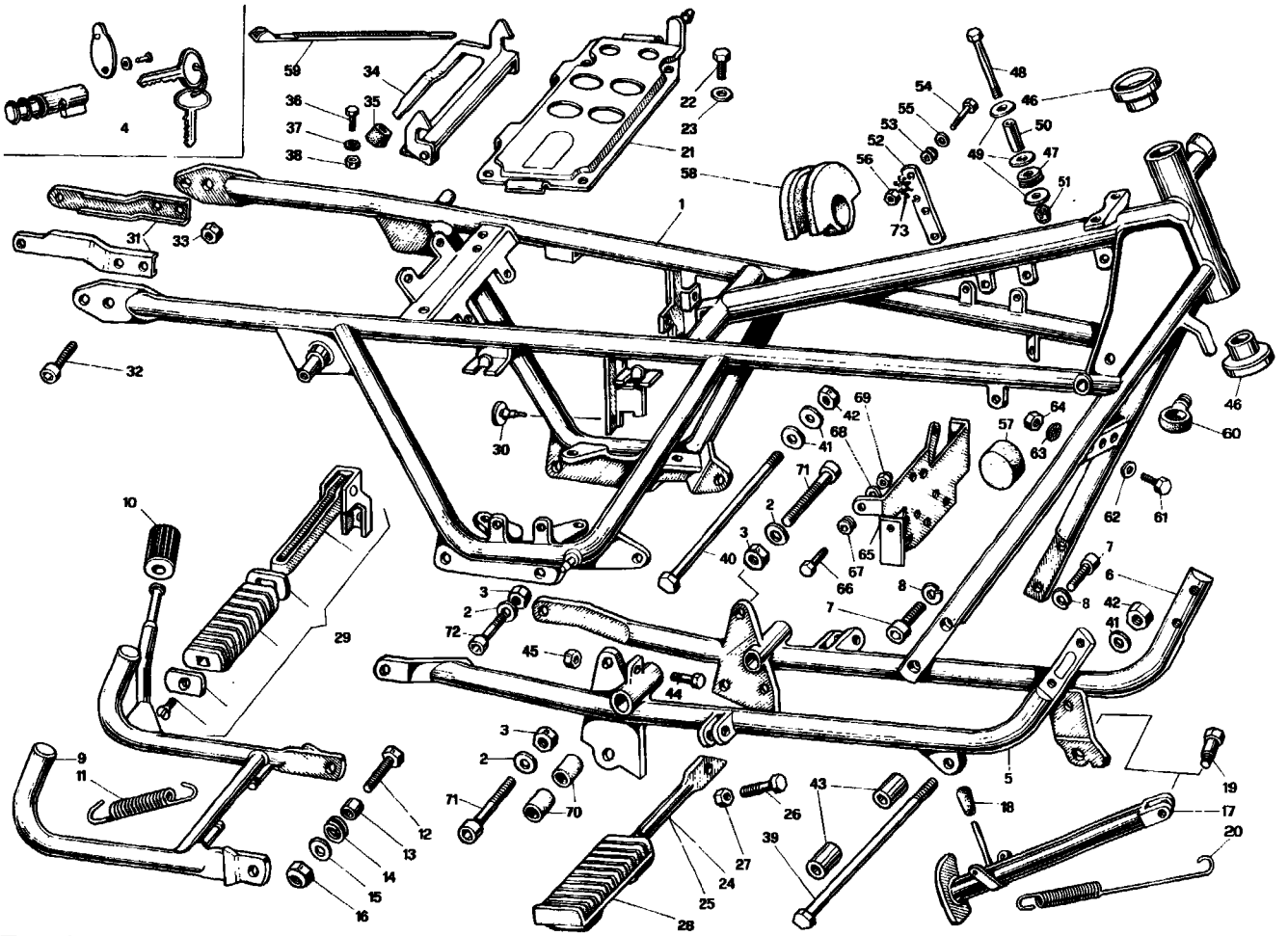

NOTE NOTES NOTES MARKE	POS. N.	N. COD. CODE No. No. CODE CODE Nr.	Q.tà Q.ty Q.té M.ge	DENOMINAZIONE	DESCRIPTION	DESIGNATION	BEZEICHNUNG
	1	19 40 01 00	1	Telaio completo	Frame, assy	Châssis complet	Rahmen, kpl.
	2	95 00 42 10	4	Rondella	Washer	Rondelle	Scheibe
	3	92 60 22 10	4	Dado	Nut	Ecrou	Mutter
	4	39 78 25 00	1	Antifurto con chiavi	Anti-theft with keys	Antivol avec clés	Diebstahlschutz mit Schl.
	5	19 42 03 00	1	Braccio culla destro	R.H. arm	Bras D	Arm R.
	6	19 42 21 00	1	Braccio culla sinistro	L.H. arm	Bras G	Arm, L.
	7	98 62 25 22	4	Vite	Screw	Vis	Schraube
	8	95 12 01 05	4	Rondella elastica	Spring washer	Rondelle élastique	Federscheibe
	9	19 43 03 00	1	Cavalletto	Stand	Béquille	Ständer
	10	13 43 26 40	1	Pedalino in gomma	Rubber foot rest	Caoutch. de rep.-pieds	Fussrastegummi
	11	12 43 40 01	2	Molla	Spring	Ressort	Feder
	12	98 05 45 30	2	Vite	Screw	Vis	Schraube
	13	91 18 11 11	2	Distanziale	Spacer	Entretoise	Distanzstück
	14	94 32 22 15	1	Molla	Spring	Ressort	Feder
	15	95 00 02 10	2	Ranella	Washer	Rondelle	Scheibe
	16	92 63 05 10	2	Dado	Nut	Ecrou	Mutter
	17	19 43 20 00	1	Puntone laterale	Side bar	Tirant latéral	Seitenstange
	18	19 43 30 00	1	Gommino	Rubber	Caoutchouc	Gummistück
	19	99 10 51 29	1	Perno	Pin	Goujon	Stift
	20	19 43 40 00	2	Molla	Spring	Ressort	Feder
	21	19 41 82 00	1	Piastra porta batteria	Plate	Plaque	Platte
	22	98 05 44 18	4	Vite	Screw	Vis	Schraube
	23	95 00 42 08	4	Rosetta piana	Washer	Rondelle	Scheibe
	24	39 44 07 00	1	Tubo dx portapedana	R.H. pipe	Tuyau D	Rohr, R.
	25	39 44 18 00	1	Tubo sx portapedana	L.H. pipe	Tuyau G	Rohr, L.
	26	98 82 04 30	2	Vite	Screw	Vis	Schraube
	27	92 60 22 08	2	Dado	Nut	Ecrou	Mutter
	28	39 44 32 00	2	Pedana appoggiapiedi	Foot rest	Repose-pieds	Fussraste
	29	61 44 23 00	2	Pedana appoggiap. post.	Rear foot rest	Repose-pieds AR	Hint. Fussraste
	30	19 70 59 00	4	Tappo	Plug	Bouchon	Stopfen
	31	19 43 91 00	2	Supporto paraf. post.	Rear fender bracket	Support d'aile AR	Hint. Kotflügelstütze
●	32	98 82 24 18	4	Vite	Screw	Vis	Schraube
	33	92 63 05 08	4	Dado autobloccante	Self-locking nut	Ecrou à autoblocage	Hutmutter
	34	19 46 20 50	1	Arpione blocc. sella	Pawl	Rochet	Sperrklinke
	35	61 46 28 00	1	Gommino	Rubber	Caoutchouc	Gummistück
	36	98 05 43 12	2	Vite	Screw	Vis	Schraube

Seimm Moto Guzzi S.p.A. - 22054 Mandello del Lario (Co) - Tel. 731112 - 732512 - Tx: 38095 - 6/78 - 2500 K Printed in Italy

Dati indicativi soggetti a modifiche senza impegno di preavviso - All data are subject to modification without notice - Scanzorosciate (Bg)

www.guzzitek.org - Revente Interdite - Revendita Vietata - Resaling Forbiden - Wiederverkauf Verboten

V35-V50

Tavola - Drawing
Table - Bild
12

TELAIO
FRAME
CHASSIS
RAHMEN

SEIMM
MOTO GUZZI

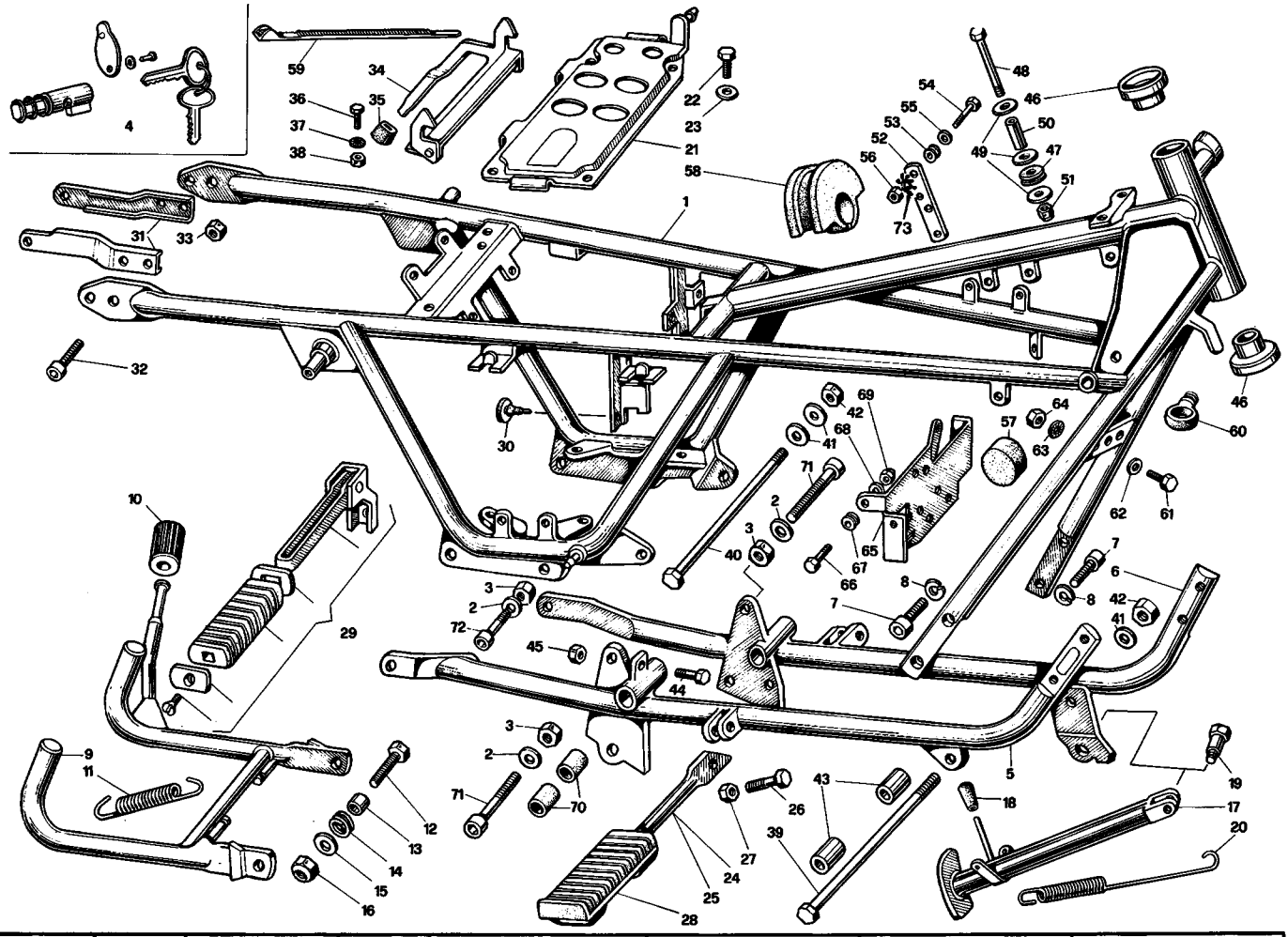

NOTE NOTES NOTES MARKE	POS. N.	N. COD. CODE No. No. CODE CODE Nr.	Q.tà Q.ty Q.té M.ge	DENOMINAZIONE	DESCRIPTION	DESIGNATION	BEZEICHNUNG
	37	95 02 11 06	2	Ranella elastica	Spring washer	Rondelle élastique	Federscheibe
	38	92 60 22 06	2	Dado	Nut	Ecrou	Mutter
	39	53 42 95 00	1	Tirante lungo	Long rod	Tirant long	Lange Zugstange
	40	98 11 01 99	1	Tirante corto	Short rod	Tirant court	Kurze Zugstange
	41	95 00 42 10	3	Rondella	Washer	Rondelle	Scheibe
	42	92 60 22 10	2	Dado	Nut	Ecrou	Mutter
	43	19 01 70 00	2	Boccola	Bush	Douille	Buchse
	44	98 05 43 22	1	Vite di registro	Adjusting screw	Vis de réglage	Einstellschraube
	45	92 60 22 06	1	Dado	Nut	Ecrou	Mutter
	46	39 51 50 00	2	Calotta	Cap	Couvercle	Deckel
	47	91 55 10 85	2	Gommino	Rubber	Caoutchouc	Gummistück
	48	98 05 23 45	2	Vite	Screw	Vis	Schraube
	49	95 10 01 39	8	Rondella	Washer	Rondelle	Scheibe
	50	91 18 07 21	2	Distanziale	Spacer	Entretoise	Distanzstück
	51	92 63 01 06	2	Dado	Nut	Ecrou	Mutter
	52	19 71 68 01	4	Piastra attacco bobina	Plate	Plaque	Platte
	53	91 55 10 85	2	Gommino	Rubber	Caoutchouc	Gummistück
	54	98 05 22 25	2	Vite	Screw	Vis	Schraube
	55	95 00 42 05	2	Rondella	Washer	Rondelle	Scheibe
	56	92 60 22 05	2	Dado	Nut	Ecrou	Mutter
	57	39 10 34 00	2	Gommino	Rubber	Caoutchouc	Gummistück
	58	14 10 71 00	1	Tampone centrale	Rubber buffer	Tampon en caoutch.	Gummipuffer
	59	14 60 96 50	1	Fascetta	Clamp	Collier	Schelle
	60	19 43 65 00	2	Occhiello	Screw eye	Oeillet	Anschlussöse
	61	98 82 24 20	1	Vite	Screw	Vis	Schraube
	62	95 00 02 08	1	Rondella piana	Washer	Rondelle	Scheibe
	63	95 02 11 08	1	Rondella elast. ondul.	Tooth washer	Rondelle élastique	Federscheibe
	64	92 60 22 08	1	Dado	Nut	Ecrou	Mutter
	65	19 70 41 00	1	Piastra fiss. raddrizz.	Plate	Plaque	Platte
	66	98 05 22 20	2	Vite	Screw	Vis	Schraube
	67	91 55 10 85	2	Gommino	Rubber	Caoutchouc	Gummistück
	68	95 10 00 59	2	Rondella piana	Washer	Rondelle	Scheibe
	69	92 63 01 05	2	Dado in nylon	Nylon nut	Ecrou en nylon	Nylonmutter
	70	18 25 20 50	4	Boccola	Bush	Douille	Buchse
	71	98 05 25 65	2	Vite lunga	Long screw	Vis longue	Lange Schraube
	72	98 05 25 55	2	Vite corta	Short screw	Vis courte	Kurze Schraube
	73	95 02 11 05	2	Rosetta elast. dent.	Tooth washer	Rondelle dentée	Zahnscheibe

Seimm Moto Guzzi S.p.A. - 22054 Mandello del Lario (Co) - Tel. 731112 - 732512 - Tx: 38095 - 6/78 - 2500 K

Printed in Italy

Dati indicativi soggetti a modifiche senza impegno di preavviso - All data are subject to modification without notice

- Scanzorosciate (Bg)

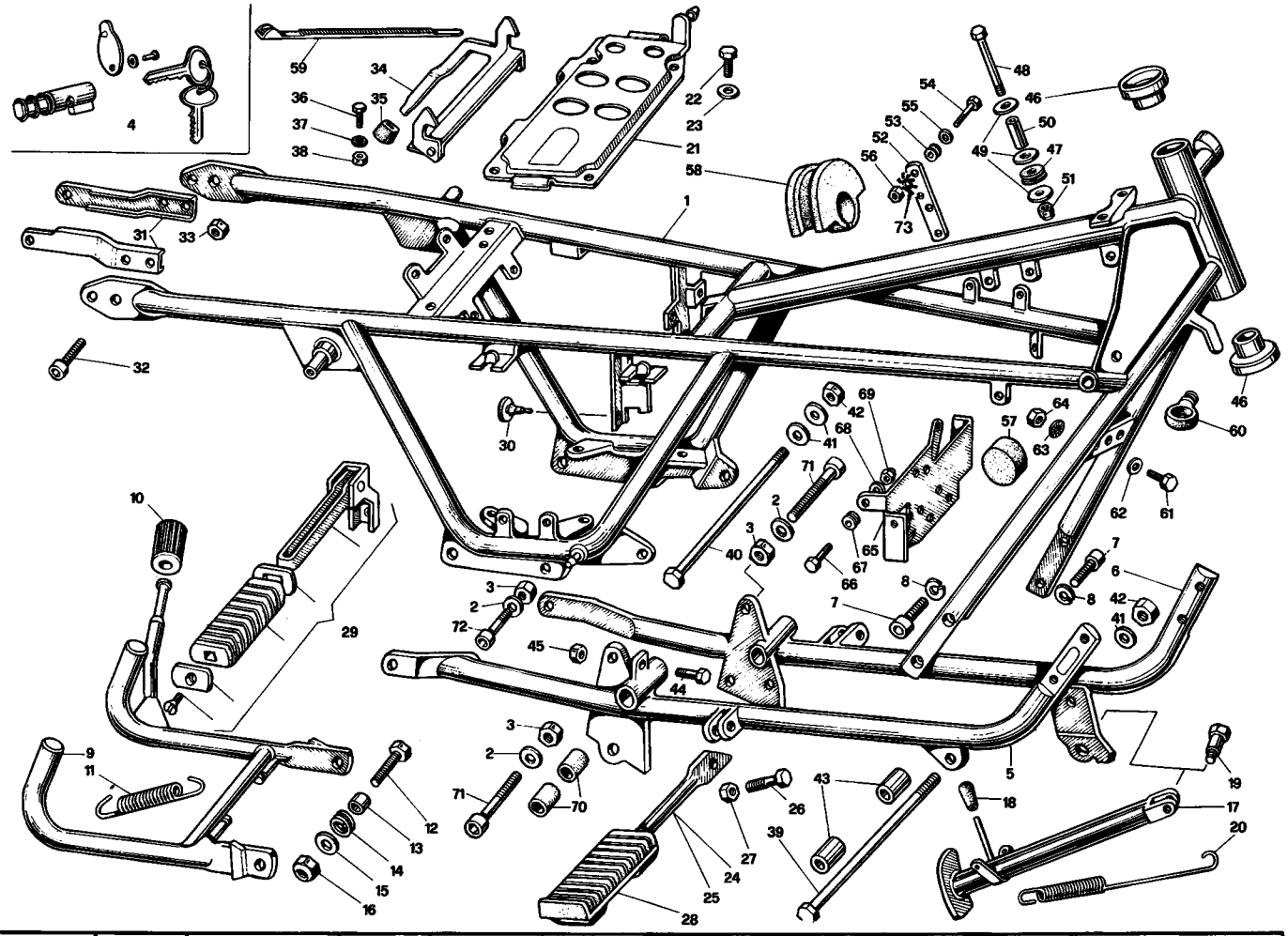

NOTE NOTES NOTES MARKE	POS. N.	N. COD. CODE No. No. CODE CODE Nr.	Q.tà Q.ty Q.té M.ge	DENOMINAZIONE	DESCRIPTION	DESIGNATION	BEZEICHNUNG

● **I sottonotati particolari rappresentano le varianti per il mod. V50**
Following items refer to V50 mod. only
Les pièces indiquées ci-dessous représentent les variantes pour le mod. V50
Die untergegebene Teile sind nur für Modell V50 gültig

32	98 82 24 18	2	Vite fiss. supp.	Screw	Vis	Schraube
32	98 82 24 20	2	Vite fiss. supp. e man.	Screw	Vis	Schraube

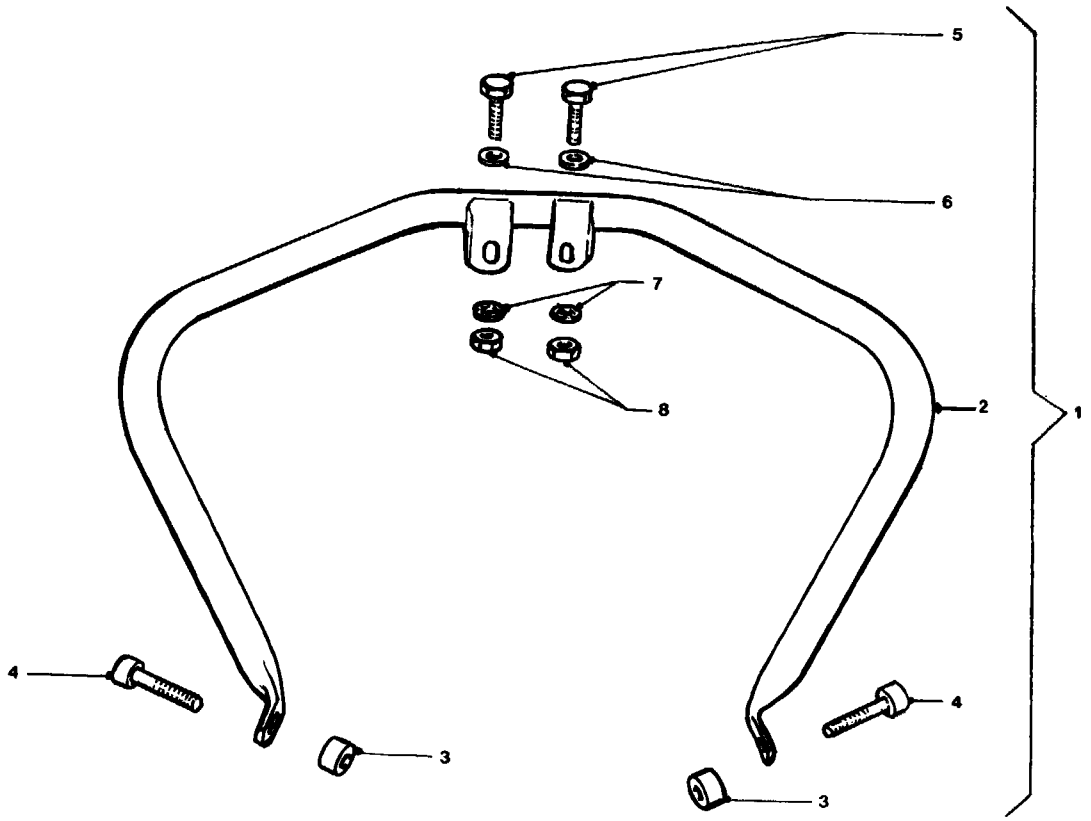

NOTE NOTES NOTES MARKE	POS. N.	N. COD. CODE No. No. CODE CODE Nr.	Q.tà Q.ty Q.té M.ge	DENOMINAZIONE	DESCRIPTION	DESIGNATION	BEZEICHNUNG
	1	19 45 98 00	1	Kit paraurti anteriore comprende:	Front bumper kit includes:	Kit de pare-choc AV comprend:	Vord. Stossfänger Kit einschliesst:
	2	19 45 02 00	1	Paraurti anteriore	Front bumper	Pare-choc AV	Vord. Stossfänger
	3	91 18 11 12	2	Distanziatore per paraur.	Spacer	Entretoise	Distanzstück
	4	98 62 05 40	2	Vite fiss. paraurti	Screw	Vis	Schraube
	5	98 05 44 20	2	Vite super. fiss. paraurti	Screw	Vis	Schraube
	6	95 00 42 08	2	Rosetta piana	Washer	Rondelle	Scheibe
	7	95 02 11 08	2	Rosetta elast. dentell.	Tooth washer	Rondelle dentée	Zahnscheibe
	8	92 60 22 08	2	Dado per vite super.	Nut	Ecrou	Mutter

Seimm Moto Guzzi S.p.A. - 22054 Mandello del Lario (Co) - Tel. 731112 - 732512 - Tx: 38095 - 6/78 - 2500 K Printed in Italy

Dati indicativi soggetti a modifiche senza impegno di preavviso - All data are subject to modification without notice - Scanzorosciate (Bg)

www.guzzitek.org - Revente Interdite - Revendita Vietata - Resaling Forbiden - Wiederverkauf Verboten

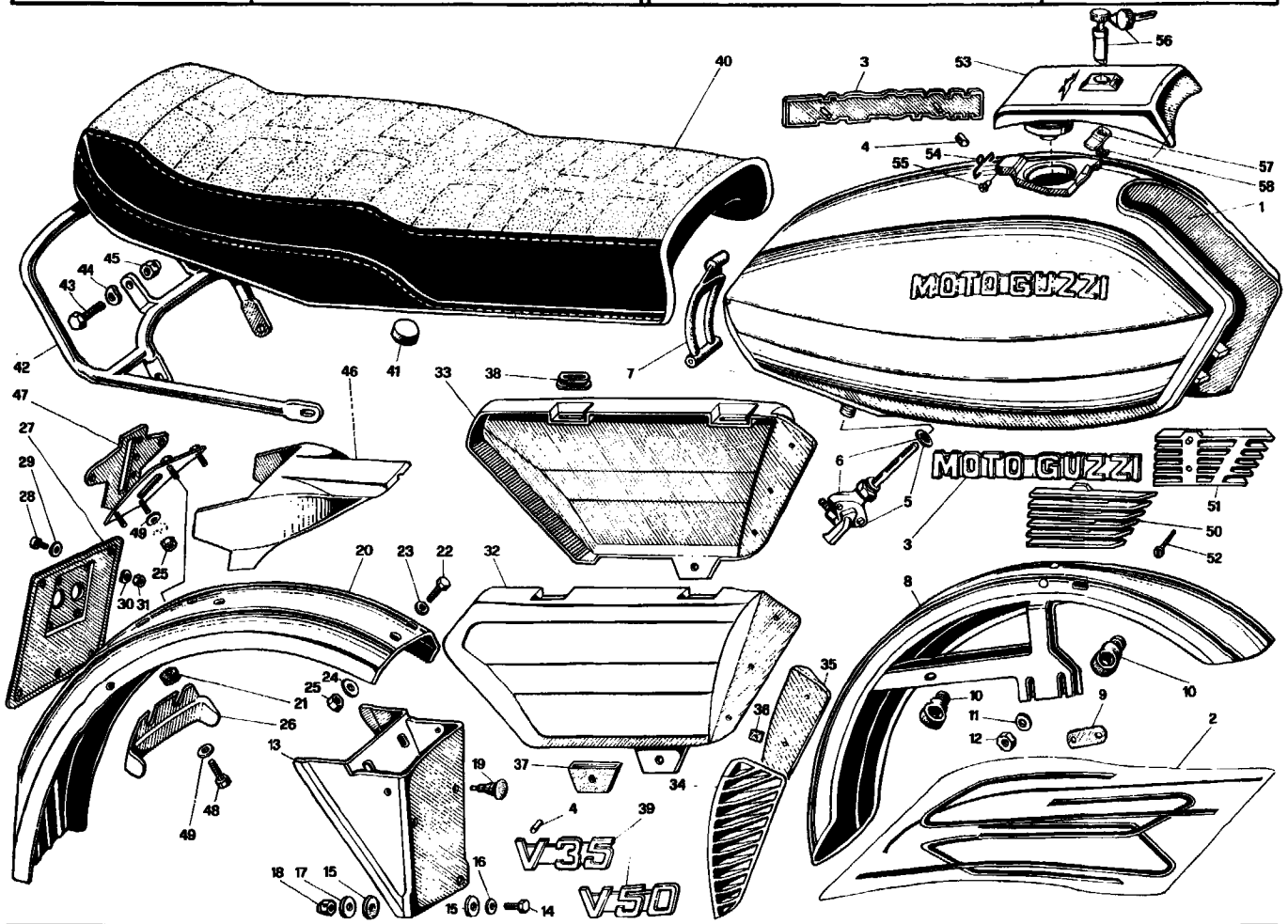

NOTE NOTES NOTES MARKE	POS. N.	N. COD. CODE No. No. CODE CODE Nr.	Q.tà Q.ty Q.té M.ge	DENOMINAZIONE	DESCRIPTION	DESIGNATION	BEZEICHNUNG
●	1	19 10 02 01	1	Serbatoio rosso	Fuel tank (red)	Réservoir (rouge)	Kraftstoffbehälter (rot)
●	1	19 10 02 02	1	Serbatoio grigio metall.	Fuel tank (metall. grey)	Réservoir (gris métall.)	K.stoffbehälter (Met. grau)
	2	19 92 33 00	1	Serie decalcom. (V35)	Decal set (V35)	Jeu de décalc. (V35)	Abziehbildsatz (V35)
	3	14 91 73 00	2	Marchio per serbatoio	Mark	Marque	Marke
	4	14 10 51 00	8	Fermaglio	Fastener clip	Etrier	Schelle
	5	65 10 54 00	1	Rubinetto destro	F.H. fuel tap	Robinet D	Kraftstoffhahn, R.
	6	65 10 54 01	1	Rubinetto sinistro	L.H. fuel tap	Robinet G	Kraftstoffhahn, L.
	7	19 10 27 50	1	Tirante	Rod	Tirant	Stange
1943430001 (SOLO GREZZO) ●	~~8~~	~~19 43 43 01~~	1	Parafango anter. in lamiera - Rosso	Front fender (sheet) - (red)	Aile AV en tôle (rouge)	Vord. Kotflügel (Blech) (rot)
	~~8~~	~~19 43 43 02~~	1	Parafango anter. in lamiera - Grigio metall.	Front fender (sheet) (metall. grey)	Aile AV en tôle (gris métall.)	Vord. Kotflügel (Blech) (metall. grau)
	~~8~~	~~19 43 44 05~~	1	Parafango anter. in plastica - Rosso	Front fender (plastic) - (red)	Aile AV (plastique) (rouge)	(Vord. Kotflügel (plastisch) (rot)
●	~~8~~	~~19 43 44 06~~	1	Parafango anter. in plastica - Grigio metall.	Front fender (plastic) (metall. grey)	Aile AV (plastique) (gris métall.)	Vord. Kotflügel (plastisch) (metall. grau)
	9	19 43 66 00	2	Piastra paraf. plastica	Plastic fender plate	Plaquette aile plastique	Plast. Kotflügel Platte
	10	19 43 65 00	2	Occhiello	Screw eye	Oeillet	Anschlussöse
	11	61 27 03 00	4	Rondella	Washer	Rondelle	Scheibe
	12	92 60 22 08	4	Dado	Nut	Ecrou	Mutter
	13	19 43 87 00	1	Paraspruzzi	Wheelshield	Cache-roue	Zierdeckel
	14	98 05 43 20	2	Vite	Screw	Vis	Schraube
	15	93 11 00 60	8	Spessore in gomma	Rubber spacer	Entretoise en caoutch.	Gummistück
	16	95 00 02 06	4	Rosetta piana	Washer	Rondelle	Scheibe
	17	95 10 01 41	4	Rosetta piana	Washer	Rondelle	Scheibe
	18	92 63 01 06	4	Dado autobloccante	Self-locking nut	Ecrou à autoblocage	Hutmutter
	19	19 70 59 00	2	Tappo sul paraspruzzi	Plug	Bouchon	Stopfen
●	20	19 43 70 01	1	Parafango post. - Rosso	Rear fender (red)	Aile AV (rouge)	Hint. Kotflügel (rot)
	20	19 43 70 02	1	Paraf. post. - Grigio metal.	Rear fender (metall. grey)	Aile AR (gris métall.)	Hint Kotfl. (met. grau)
	21	91 55 11 02	1	Gommino passacavo	Rubber grommet	Guide-câble	Gummistülle
	22	98 05 43 12	2	Vite	Screw	Vis	Schraube
	23	95 00 42 06	2	Rondella	Washer	Rondelle	Scheibe
	24	95 10 01 21	2	Rondella	Washer	Rondelle	Scheibe
	25	92 60 22 06	4	Dado	Nut	Ecrou	Mutter
	26	19 43 85 00	1	Supporto cavi	Cable support	Support de fils	Kabelstütze
	27	39 47 46 00	1	Piastra portatarga	Number pl. hold. plate	Plaque porte-pl. de pol.	Nummerschildplatte

Seimm Moto Guzzi S.p.A. - 22054 Mandello del Lario (Co) - Tel. 731112 - 732512 - Tx: 38095 - 6/78 - 2500 K

Printed in Italy

Dati indicativi soggetti a modifiche senza impegno di preavviso - All data are subject to modification without notice

- Scanzorosciate (Bg)

www.guzzitek.org - Revente Interdite - Revendita Vietata - Resaling Forbiden - Wiederverkauf Verboten

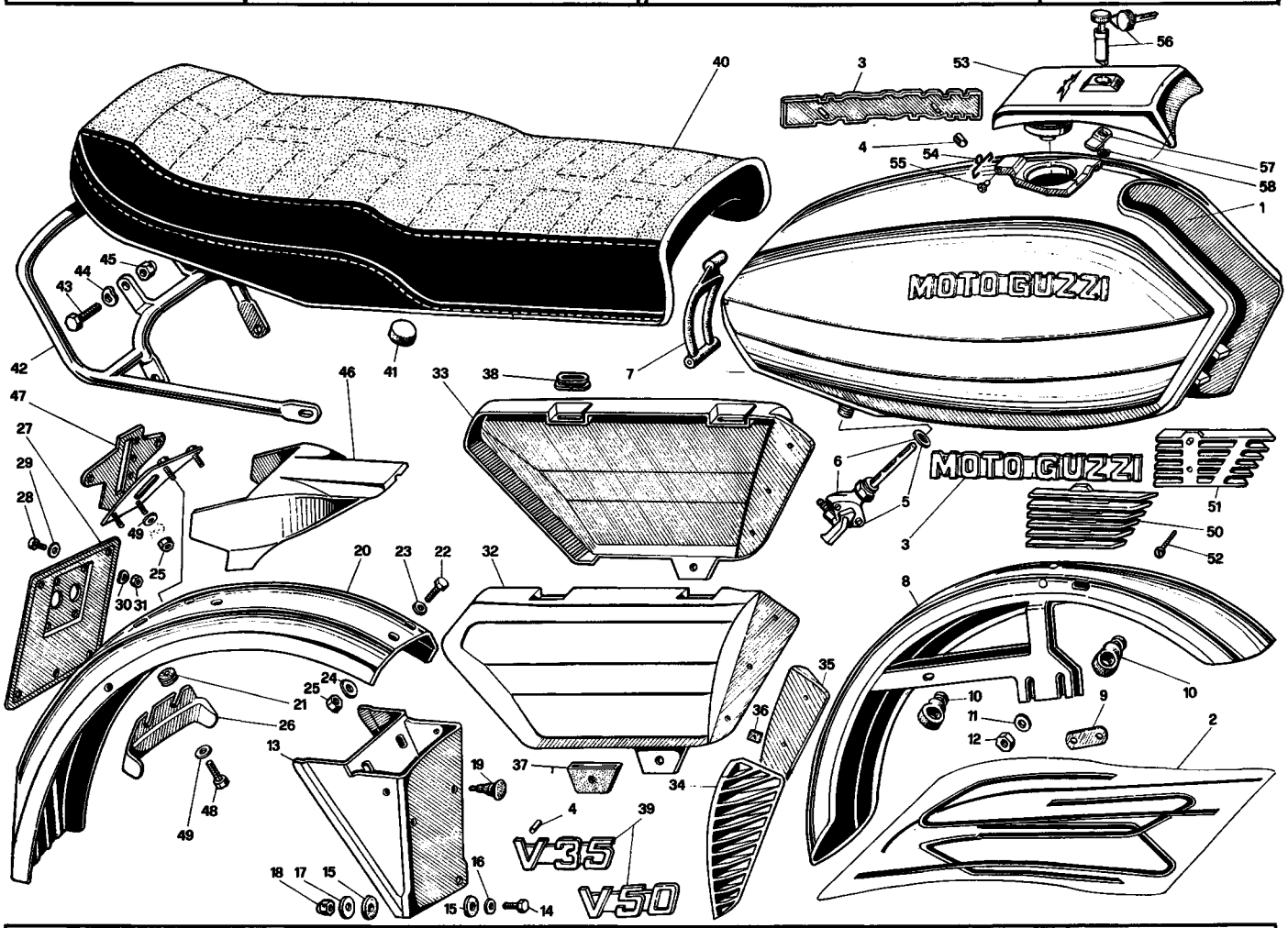

NOTE NOTES NOTES MARKE	POS. N.	N. COD. CODE No. No. CODE CODE Nr.	Q.tà Q.ty Q.té M.ge	DENOMINAZIONE	DESCRIPTION	DESIGNATION	BEZEICHNUNG
	28	98 20 04 08	4	Vite	Screw	Vis	Schraube
	29	95 00 02 04	4	Rondella piana	Washer	Rondelle	Scheibe
	30	95 12 90 80	4	Rondella ondulata	Washer	Rondelle	Scheibe
	31	92 60 22 04	4	Dado	Nut	Ecrou	Mutter
●	32	19 47 62 01	1	Coperchio dx - Rosso	R.H. cover (red)	Couvercle D (rouge)	Deckel, R. (rot)
●	32	19 47 62 02	1	Coperchio dx - Grigio met.	R.H. cover (met. grey)	Couvercle D (gris métall.)	Deckel, R. (met. grau)
●	33	19 47 63 01	1	Coperchio sx - Rosso	L.H. cover (red)	Couvercle G (rouge)	Deckel, L. (rot)
●	33	19 47 63 02	1	Coperchio sx - Grigio met.	L.H. cover (met. grey)	Couvercle G (gris métall.)	Deckel, L. (met. grau)
	34	19 47 81 50	1	Griglia destra	R.H. cover grill	Grille D	Deckelgrill, R.
	35	19 47 82 50	1	Griglia sinistra	L.H. cover grill	Grille G	Deckelgrill L.
	36	39 92 22 00	6	Piastrina a pressione	Plate	Plaque	Platte
	37	19 47 85 50	2	Settore elastico	Flexible spacer ring	Entretoise élast.	Elast. Distanzrohr
	38	19 47 87 50	4	Gommino	Rubber	Caoutchouc	Gummistück
●	39	19 92 20 00	2	Marchio V35	Mark V35	Marque V35	Marke V35
	40	19 46 05 50	1	Sella completa	Saddle, compl.	Selle complète	Sattel, kpl.
	41	19 46 16 50	4	Tampone	Rubber ring	Disque en caoutch.	Gummiring
	42	19 46 43 50	1	Maniglia	Handgrip	Poignée	Handgriff
	43	98 05 44 20	2	Vite	Screw	Vis	Schraube
	44	61 27 03 00	2	Rondella elastica	Spring washer	Rondelle élastique	Federscheibe
	45	92 63 01 08	2	Dado autofrenante	Nut	Ecrou	Mutter
	46	19 74 10 00	1	Carenatura per fanal.	Support	Support	Halter
	47	19 74 12 00	1	Supporto per fanal.	Support	Support	Halter
	48	98 05 43 14	2	Vite	Screw	Vis	Schraube
	49	95 10 01 21	4	Rondella	Washer	Rondelle	Scheibe
	50	19 92 50 00	1	Griglia destra	R.H. grill	Grille D	Grill, R.
	51	19 92 51 00	1	Griglia sinistra	L.H. grill	Grille G	Grill, L.
	52	98 29 05 11	2	Vite	Screw	Vis	Schraube
	53	19 10 39 51	1	Tappo compl. senza serratura	Plug assy without lock	Bouchon complet sans serrure	Stopfen, kpl. ohne Schloss
	54	19 10 47 51	1	Molla per tappo	Spring	Ressort	Feder
	55	91 85 73 10	2	Rivetto	Rivet	Rivet	Niet
	56	19 10 51 50	1	Serratura per tappo compl. di chiave	Lock with keys	Serrure avec clés	Schloss mit Schlussel
	57	19 10 50 52	1	Chiavistello per serratura	Lock latch	Verrou	Riegel
	58	19 10 49 50	1	Fascetta fiss. chiavistello	Clamp	Collier	Schelle

Seimm Moto Guzzi S.p.A. - 22054 Mandello del Lario (Co) - Tel. 731112 - 732512 - Tx: 38095 - 6/78 - 2500 K Printed in Italy

Dati indicativi soggetti a modifiche senza impegno di preavviso - All data are subject to modification without notice - Scanzorosciate (Bg)

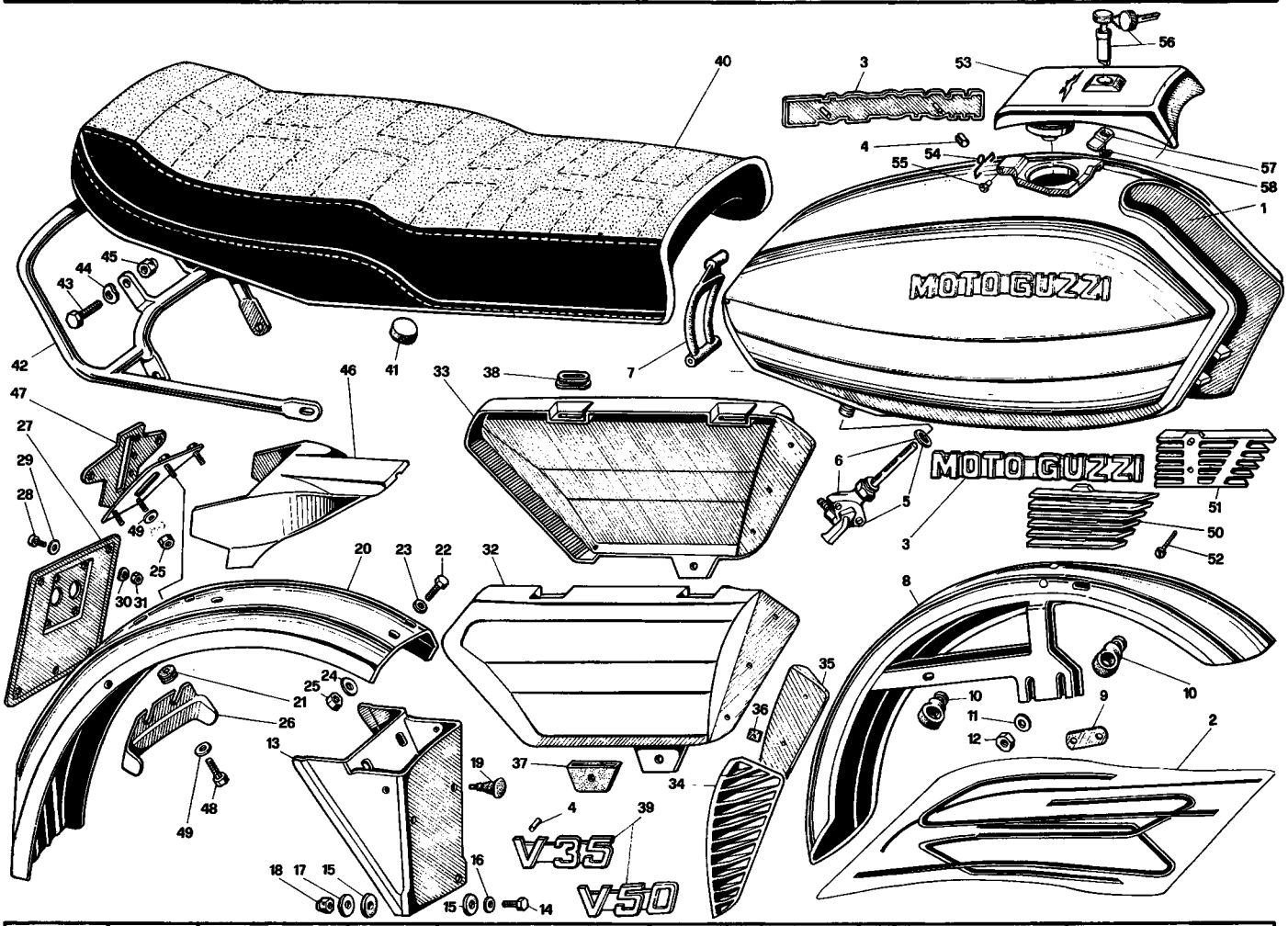

NOTE NOTES NOTES MARKE	POS. N.	N. COD. CODE No. No. CODE CODE Nr.	Q.tà Q.ty Q.té M.ge	DENOMINAZIONE	DESCRIPTION	DESIGNATION	BEZEICHNUNG

● **I sottonotati particolari rappresentano le varianti per il mod. V50**
Following items refer to V50 mod. only
Les pièces indiquées ci-dessous représentent les variantes pour le mod. V50
Die untergegebene Teile sind nur für Modell V50 gültig

1	19 10 02 51	1	Serbatoio - Rosso	Fuel tank (red)	Réservoir (rouge)	Kraftstoffbehälter (rot)
1	19 10 02 52	1	Serbatoio - Bleu metall.	Fuel tank (metall. blue)	Réservoir (bleu métall.)	K.stoffbehälter (met. blau)
8	19 43 43 52	1	Parafango anter. in lamiera - Bleu metall.	Front fender (sheet) - (metall. blue)	Aile AV en tôle - (bleu métall.)	Vord. Kotflügel (Blech) (metall. blau)
8	19 43 44 55	1	Parafango anter. in plastica - Bleu metall.	Front fender (plastic) - (metall. blue)	Aile AV en plastique (bleu métall.)	Vord. Kotflügel (plastisch) (metall. blau)
20	19 43 70 52	1	Paraf. post. - Bleu met.	Rear fender (met. blue)	Aile AR (bleu métall.)	Hint. Kotfl. (met. blau)
32	19 47 62 51	1	Coperchio dx - Rosso	R.H. cover (red)	Couvercle D (rouge)	Deckel, R. (rot)
32	19 47 62 52	1	Coperchio dx - Bleu metallizzato	R.H. cover (metall. blue)	Couvercle D (bleu métall.)	Deckel, R. (metall. blau)
33	19 47 63 51	1	Coperchio sx - Rosso	L.H. cover (red)	Couvercle G (rouge)	Deckel, L. (rot)
33	19 47 63 52	1	Coperchio sx Bleu metallizzato	L.H. cover (metall. blue)	Couvercle G (bleu métall.)	Deckel, L. (metall. blau)
39	19 92 20 51	2	Marchio V50	Mark V50	Marque V50	Marke V50

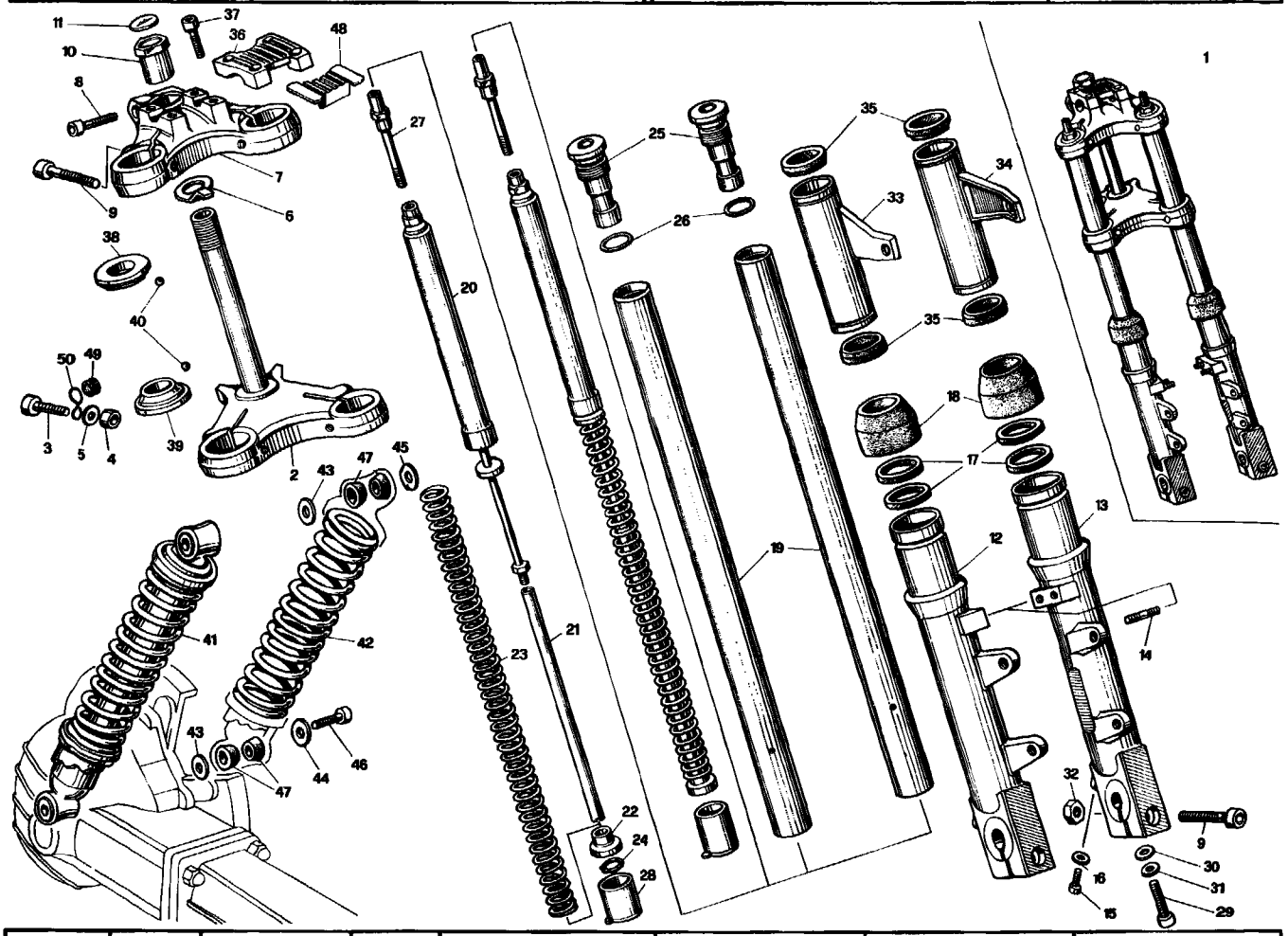

NOTE NOTES NOTES MARKE	POS. N.	N. COD. CODE No. No. CODE CODE Nr.	Q.tà Q.ty Q.té M.ge	DENOMINAZIONE	DESCRIPTION	DESIGNATION	BEZEICHNUNG
19490305	1	~~19 49 03 01~~	1	Forcella senza foderi	Fork without stay tube	Fourche sans tuyau étai	Gabel ohne Stutzrohr
	2	39 49 40 02	1	Base forcella	Fork yoke	Chape de fourche	Gabeluntersatz
	3	98 62 05 55	2	Vite	Screw	Vis	Schraube
	4	91 18 11 10	2	Bussola	Bush	Douille	Buchse
	5	95 00 42 10	2	Rondella	Washer	Rondelle	Scheibe
	6	62 49 32 00	1	Rondella di fermo	Washer	Rondelle	Scheibe
	7	39 49 31 01	1	Testa per forcella	Fork head	Tête de fourche	Gabelkopf
	8	98 62 04 35	1	Vite	Screw	Vis	Schraube
	9	98 62 05 40	4	Vite	Screw	Vis	Schraube
	10	17 51 66 00	1	Bussola bloccasterzo	Bush	Douille	Buchse
	11	17 51 77 00	1	Marchio per bussola	Mark	Marque	Marke
	12	19 52 25 00	1	Gambale destro	R.H. sleeve	Chemise D	Laufbüchse, R.
	13	19 52 26 00	1	Gambale sinistro	L.H. sleeve	Chemise G	Laufbüchse, L.
	14	96 50 80 21	4	Prigioniero	Stud bolt	Goujon	Stiftschraube
	15	98 62 03 12	2	Vite scarico olio	Oil drain screw	Vis de vidange huile	Olablassschraube
	16	95 10 01 16	2	Rondella alluminio	Washer	Rondelle	Scheibe
	17	90 40 32 42	4	Anello di tenuta	Seal ring	Bague d'étanchéité	Dichtring
	18	53 52 45 40	2	Custodia gambali	Dust guard	Cache poussière	Schmutzfänger
	19	39 52 54 01	2	Braccio per forcella	Fork arm	Bras pour fourche	Gabelarm
	20	14 52 64 07	2	Ammortizzatore	Shock absorber	Amortisseur	Stossdämpfer
	21	53 52 78 40	2	Tubo per asta	Pipe	Tuyau	Rohr
	22	53 52 79 40	2	Estremità per asta	Tube end	Embout	Rohrende
	23	19 52 66 00	2	Molla	Spring	Ressort	Feder
	24	90 27 10 12	2	Anello Seeger	Snap ring	Jonc d'arrêt	Seegerring
	25	39 50 45 01	2	Tappo superiore	Upper plug	Bouchon supér.	Oberstopfen
	26	90 70 62 02	2	Anello di tenuta	Seal ring	Bague d'étanchéité	Dichtring
	27	19 50 48 00	2	Vite	Screw	Vis	Schraube
	28	53 52 76 40	2	Scodellino inferiore	Lower cap	Coupelle infér.	Unt. Manschette
	29	98 62 34 30	2	Vite	Screw	Vis	Schraube
	30	12 15 42 00	2	Rondella	Washer	Rondelle	Scheibe
	31	95 00 42 08	2	Rosetta	Washer	Rondelle	Scheibe
	32	92 60 22 10	2	Dado	Nut	Ecrou	Mutter
	33	19 49 61 01	1	Fodero dx (rosso)	R.H. stay tube (red)	Tuyau étai D (rouge)	Stützrohr, R. (rot)
●	33	19 49 61 02	1	Fodero dx (grigio)	R.H. stay tube (grey)	Tuyau étai D (gris)	Stützrohr, R. (grau)
	34	19 49 62 01	1	Fodero sx (rosso)	L.H. stay tube (red)	Tuyau étai G (rouge)	Stützrohr, L. (rot)
●	34	19 49 62 02	1	Fodero sx (grigio)	L.H. stay tube (grey)	Tuyau étai G (gris)	Stützrohr, L. (grau)

Seimm Moto Guzzi S.p.A. - 22054 Mandello del Lario (Co) - Tel. 731112 - 732512 - Tx: 38095 - 6/78 - 2500 K Printed in Italy

Dati indicativi soggetti a modifiche senza impegno di preavviso - All data are subject to modification without notice - Scanzorosciate (Bg)

www.guzzitek.org - Revente Interdite - Revendita Vietata - Resaling Forbiden - Wiederverkauf Verboten

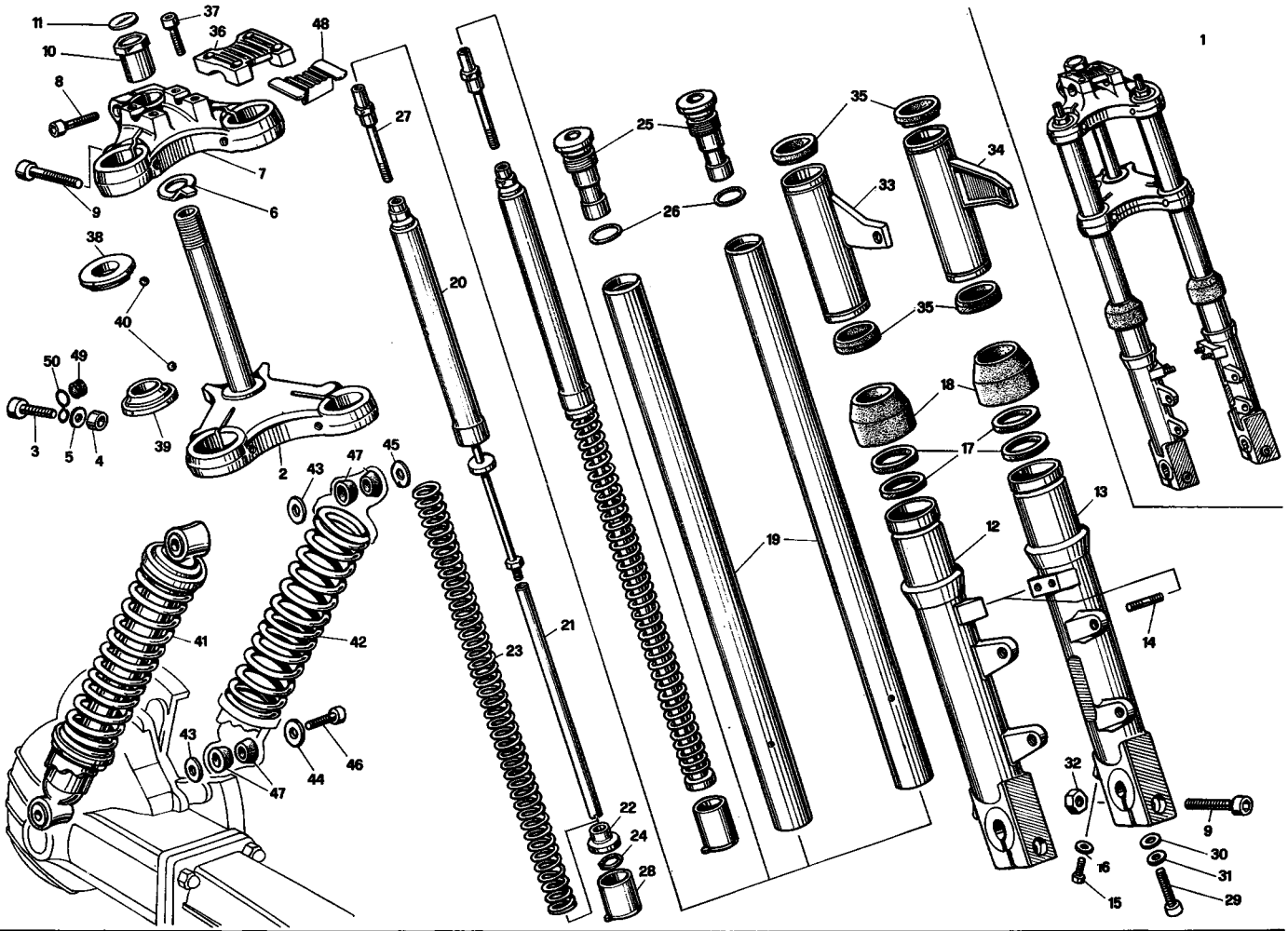

NOTE NOTES NOTES MARKE	POS. N.	N. COD. CODE No. No. CODE CODE Nr.	Q.tà Q.ty Q.té M.ge	DENOMINAZIONE	DESCRIPTION	DESIGNATION	BEZEICHNUNG
	35	39 49 27 01	4	Anello	Ring	Bague	Ring
	36	19 50 02 00	1	Morsetto	Clamp	Collier	Klemme
	37	98 83 04 30	4	Vite	Screw	Vis	Schraube
	38	61 51 49 40	1	Calotta superiore	Upper cap	Chapeau supér.	Oberkappe
	39	61 51 52 40	1	Calotta inferiore	Lower cap	Chapeau infér.	Unterkappe
	40	92 29 57 04	44	Sfera	Ball	Bille	Kugel
	41	19 55 02 00	2	Sospensione poster.	Rear suspension	Suspension AR	Hint. Aufhängung
	42	19 55 23 00	2	Molla	Spring	Ressort	Feder
	43	95 00 42 15	4	Rondella interna	Inside washer	Rondelle intérieure	Innenscheibe
	44	95 10 02 55	2	Rondella esterna inf.	Outside washer	Rondelle extérieure	Aussenscheibe
	45	95 00 02 08	2	Rondella esterna sup.	Outside washer	Rondelle extérieure	Aussenscheibe
	46	98 82 24 16	4	Vite	Screw	Vis	Schraube
	47	10 55 16 00	8	Boccola	Bush	Douille	Buchse
	48	19 50 05 00	1	Tappo coprimorsetto	Plug	Bouchon	Stopfen
	49	91 55 11 20	1	Gommino per occhiello	Rubber	Caoutchouc	Gummistück
	50	19 76 32 00	1	Occhiello trasm. contakm.	Screw eye	Oeillet	Anschlussose

● I sottonotati particolari rappresentano le varianti per il mod. V50
Following items refer to V50 mod. only
Les pièces indiquées ci-dessous représentent les variantes pour le mod. V50
Die untergegebene Teile sind nur für Modell V50 gültig

33	19 49 61 52	1	Fodero dx (Bleu metall.)	R.H. stay tube (metall. blue)	Tuyau étai D (bleu métall.)	Stützrohr, R. (metall. blau)
34	19 49 62 52	1	Fodero sx (Bleu metall.)	L.H. stay tube (metall. blue)	Tuyau étai G (bleu métall.)	Stützrohr, L. (metall. blau)

Seimm Moto Guzzi S.p.A. - 22054 Mandello del Lario (Co) - Tel. 731112 - 732512 - Tx: 38095 - 6/78 - 2500 K Printed in Italy

Dati indicativi soggetti a modifiche senza impegno di preavviso - All data are subject to modification without notice - Scanzorosciate (Bg)

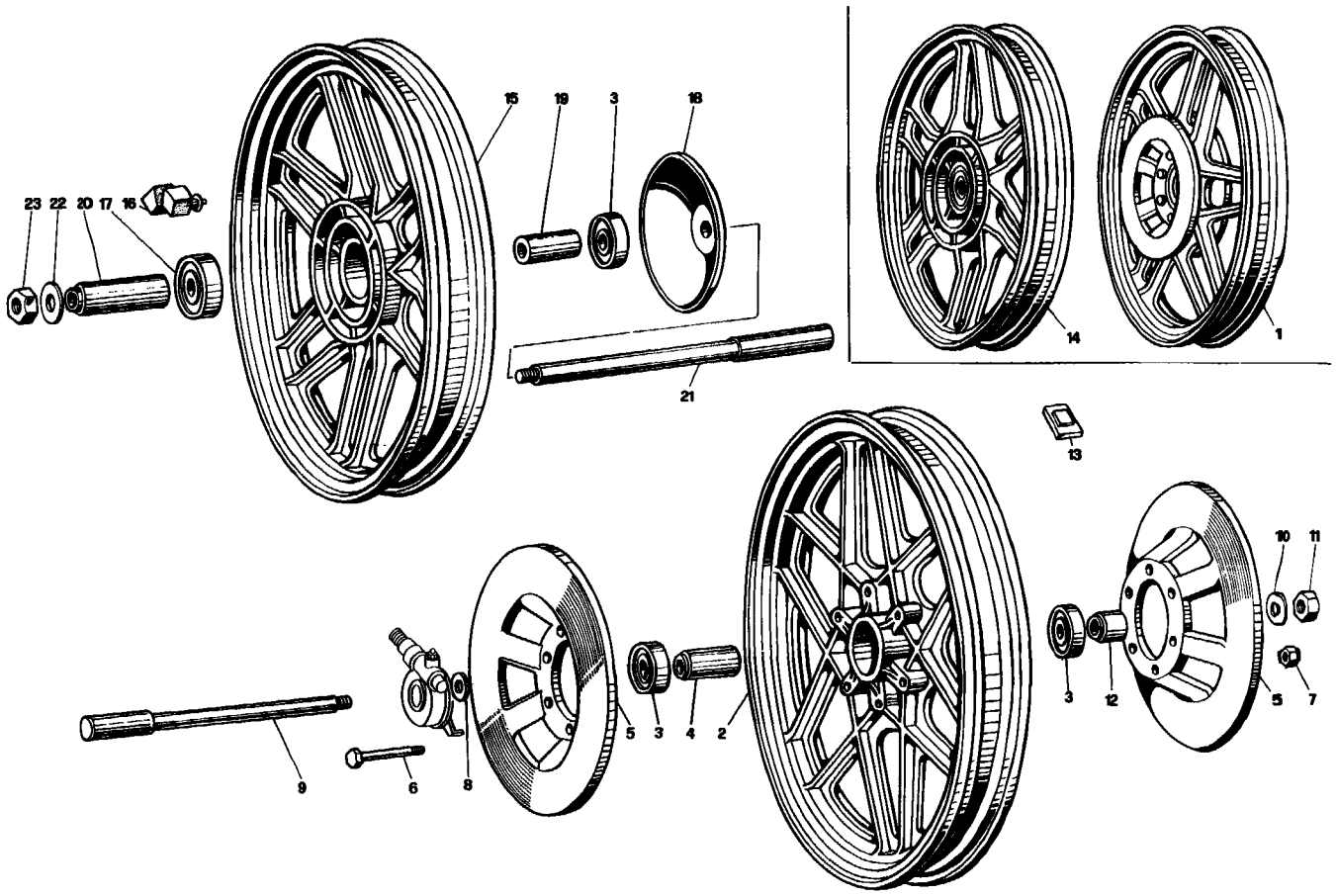

NOTE NOTES NOTES MARKE	POS. N.	N. COD. CODE No. No. CODE CODE Nr.	Q.tà Q.ty Q.té M.ge	DENOMINAZIONE	DESCRIPTION	DESIGNATION	BEZEICHNUNG
	1	19 61 02 00	1	Ruota anter. compl.	Front wheel, compl.	Roue AV, compl.	Vorderrad, kpl.
	2	19 61 03 00	1	Ruota anteriore (1.85" x 18")	Front wheel (1.85 x 18")	Roue AV (1.85 x 18")	Vorderrad (1.85 x 18")
	3	92 20 42 17	3	Cuscinetto per mozzo	Bearing	Roulement	Lager
	4	39 61 52 01	1	Distanziale	Spacer	Entretoise	Distanzstück
	5	19 61 33 00	2	Disco freno anter.	Front disc	Disque AV	Vord. Bremsscheibe
	6	98 05 24 60	6	Vite	Screw	Vis	Schraube
	7	92 63 05 08	6	Dado autofrenante	Nut	Ecrou	Mutter
	8	91 18 18 03	1	Distanziale	Spacer	Entretoise	Distanzstück
	9	19 61 41 00	1	Perno ruota anter.	Front wheel pin	Goujon roue AV	Vorderradstift
	10	95 00 42 17	1	Rosetta	Washer	Rondelle	Scheibe
	11	92 60 25 16	1	Dado	Nut	Ecrou	Mutter
	12	39 61 63 01	1	Distanziale	Spacer	Entretoise	Distanzstück
	13	14 61 61 50	1 ÷ 2	Tavoletta contrappesi	Balance weight	Masse additive	Gewichtsausgleich
	14	19 63 02 00	1	Ruota poster. compl.	Rear wheel, compl.	Roue AR, compl.	Hinterrad, kpl.
	15	19 63 06 00	1	Ruota poster. nuda (2.15 x 18")	Rear wheel (2.15 x 18")	Roue AR (2.15 x 18")	Hinterrad (2.15 x 18")
	16	19 63 25 00	6	Elemento parastrappi	Rubber coupling	Joint en caoutchouc	Gummikupplung
	17	92 20 42 18	1	Cuscinetto a sfere	Ball bearing	Roulement à billes	Kugellager
	18	19 63 64 00	1	Protezione	Protection	Protection	Schutz
	19	19 63 40 00	1	Distanziale	Spacer	Entretoise	Distanzstück
	20	19 63 41 00	1	Distanziale	Spacer	Entretoise	Distanzstück
	21	19 63 33 00	1	Perno per ruota	Wheel pin	Goujon pour roue	Radstift
	22	14 63 44 00	1	Rondella	Washer	Rondelle	Scheibe
	23	92 60 23 16	1	Dado	Nut	Ecrou	Mutter

Seimm Moto Guzzi S.p.A. - 22054 Mandello del Lario (Co) - Tel. 731112 - 732512 - Tx: 38095 - 6/78 - 2500 K Printed in Italy

Dati indicativi soggetti a modifiche senza impegno di preavviso - All data are subject to modification without notice

Scanzorosciate (Bg)

www.guzzitek.org - Revente Interdite - Revendita Vietata - Resaling Forbiden - Wiederverkauf Verboten

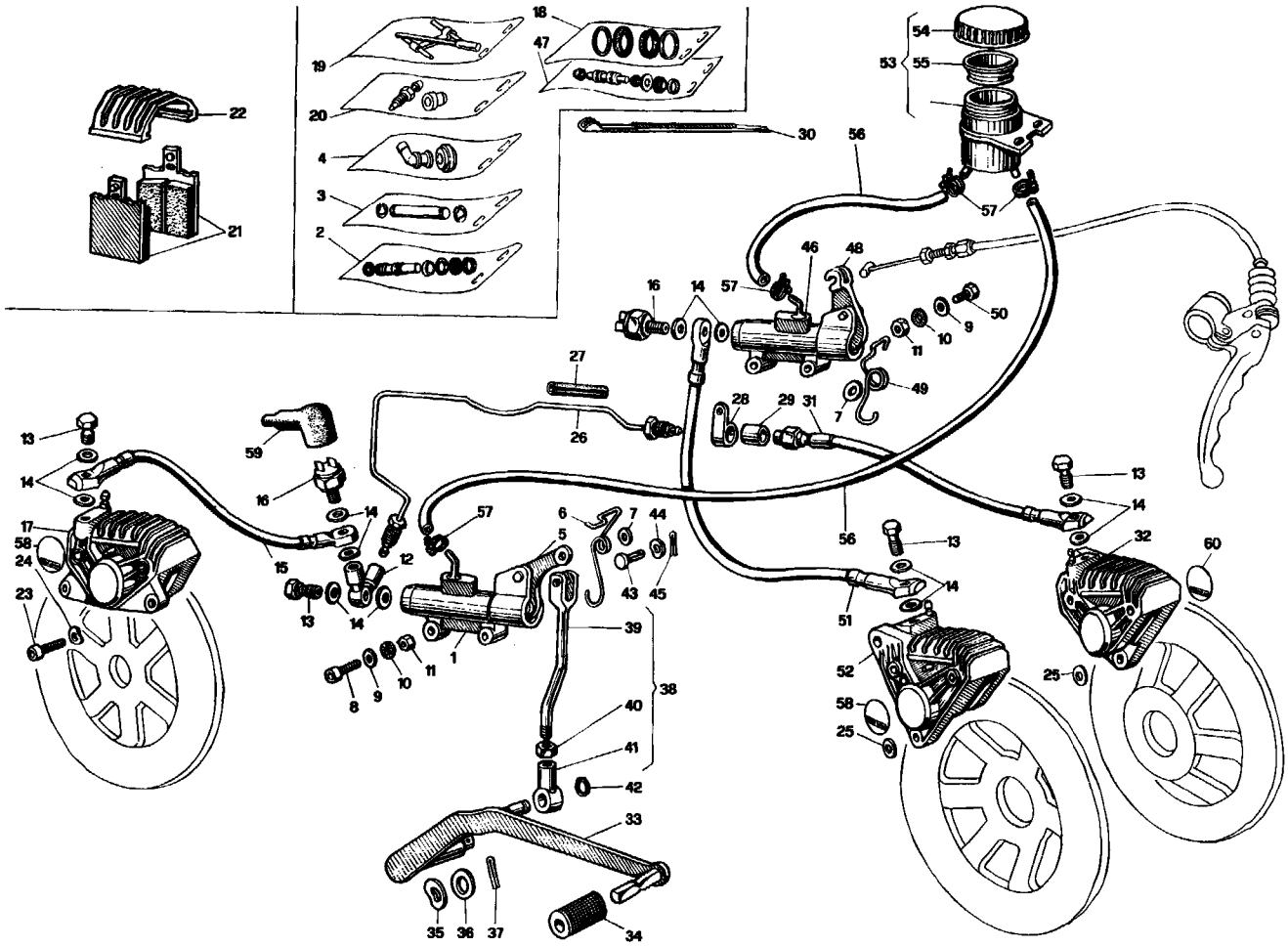

NOTE NOTES NOTES MARKE	POS. N.	N. COD. CODE No. No. CODE CODE Nr.	Q.tà Q.ty Q.té M.ge	DENOMINAZIONE	DESCRIPTION	DESIGNATION	BEZEICHNUNG
	1	19 66 70 00	1	Pompa com. freni ant. sx e post. senza leva	L.H. front & rear brake pump without lever	Pompe frein AV G et AR sans levier	L. Vord. u. Hint. Bremsepumpe ohne Hebel
	2	17 65 93 50	1	Gruppo revis. guarnizioni pompa freno poster.	Gaskets kit for for rear brake pump	Kit de joints pour pompe frein AR	Dichtung - Rep. - Satz für Hint. Bremsepumpe
	3	19 65 96 00	2	Gruppo rev. perni leva	Lever pins kit	Kit de goujons levier	Hebelstift - Rep. - Satz
	4	19 65 95 00	2	Gruppo rev. raccordo pompa freno	Brake pump union kit	Kit de raccord pompe frein	Bremsepumpe Verbindung - Rep. - Satz
	5	19 66 75 00	1	Leva com. pompa	Pump lever	Levier comm. pompe	Pumpehebel
	6	19 66 76 00	1	Molla	Spring	Ressort	Feder
	7	95 00 42 06	2	Rondella	Washer	Rondelle	Scheibe
	8	98 05 23 26	2	Vite fiss. pompa	Screw	Vis	Schraube
	9	61 01 38 00	2	Rondella piana	Washer	Rondelle	Scheibe
	10	95 02 11 06	4	Rondella dentellata	Tooth washer	Rondelle dentée	Zahnscheibe
	11	92 60 22 06	4	Dado	Nut	Ecrou	Mutter
	12	19 66 80 00	1	Ripartitore	Brake joint	Raccord frein	Bremseanschluss
	13	95 99 00 33	4	Vite cava	Screw	Vis	Schraube
	14	25 65 61 00	12	Guarnizione	Gasket	Joint	Dichtung
	15	17 65 71 01	1	Tubazione ripart.	Pipe	Tuyau	Rohr
	16	14 65 70 50	2	Interruttore idraulico	Stop light switch	Contacteur de stop	Stoplichtschalter
	17	19 65 30 00	1	Pinza per freno post.	Rear brake caliper	Etrier frein AR	Hint. Bremsesattel
	18	39 65 90 00	3	Gruppo rev. guarnizioni pinza freno	Brake caliper gaskets kit	Kit de joints étrier frein	Bremsesatteldichtung - Rep. - Satz
	19	39 65 91 00	3	Gruppo rev. perni past.	Pins kit	Kit de pivots	Bremsbelag - Rep. - Satz
	20	14 65 92 00	3	Gruppo rev. spurgo	Screws kit	Kit de vis	Schrauben - Rep. - Satz
	21	19 65 46 00	4	Past. per pinze ant. dx e post. (Ferit 334 FG)	Pads for R.H. front & rear cal. (Ferit 334 FG)	Patins pour étrier AV D et AR (Ferit 334 FG)	Bremsbelag für R. Vord. u. Hint. Fests. (Ferit 334 FG)
	21	19 65 46 01	2	Pastiglie per pinze ant. sx (Ferit I/D 346 GG)	Pads for L.H. front cal. (Ferit I/D 346 GG)	Patins pour étrier AV G (Ferit I/D 346 GG)	Bremsbelag für L. Vord. Fests. (Ferit I/D 346 GG)
	22	39 65 47 00	3	Coperchio feritoia	Cover	Couvercle	Deckel
	23	98 62 24 22	6	Vite	Screw	Vis	Schraube
	24	61 27 03 00	6	Rondella elastica	Spring washer	Rondelle élastique	Federscheibe
	25	95 10 02 50	0 ÷ 4	Rosetta di spallamento (mm 0,5)	Spacer washer (mm 0.5)	Rondelle d'épaulement (mm 0,5)	Einstellscheibe (mm 0,5)

Seimm Moto Guzzi S.p.A. - 22054 Mandello del Lario (Co) - Tel. 731112 - 732512 - Tx: 38095 - 6/78 - 2500 K Printed in Italy

Dati indicativi soggetti a modifiche senza impegno di preavviso - All data are subject to modification without notice

Scanzorosciate (Bg)

www.guzzitek.org - Revente Interdite - Revendita Vietata - Resaling Forbiden - Wiederverkauf Verboten

V35-V50

Tavola - Drawing
Table - Bild **16**

PEDALIERA E COMANDI
PEDAL AND CONTROLS
PEDALE ET COMMANDES
PEDAL UND ANTRIEB

SEIMM
MOTO GUZZI

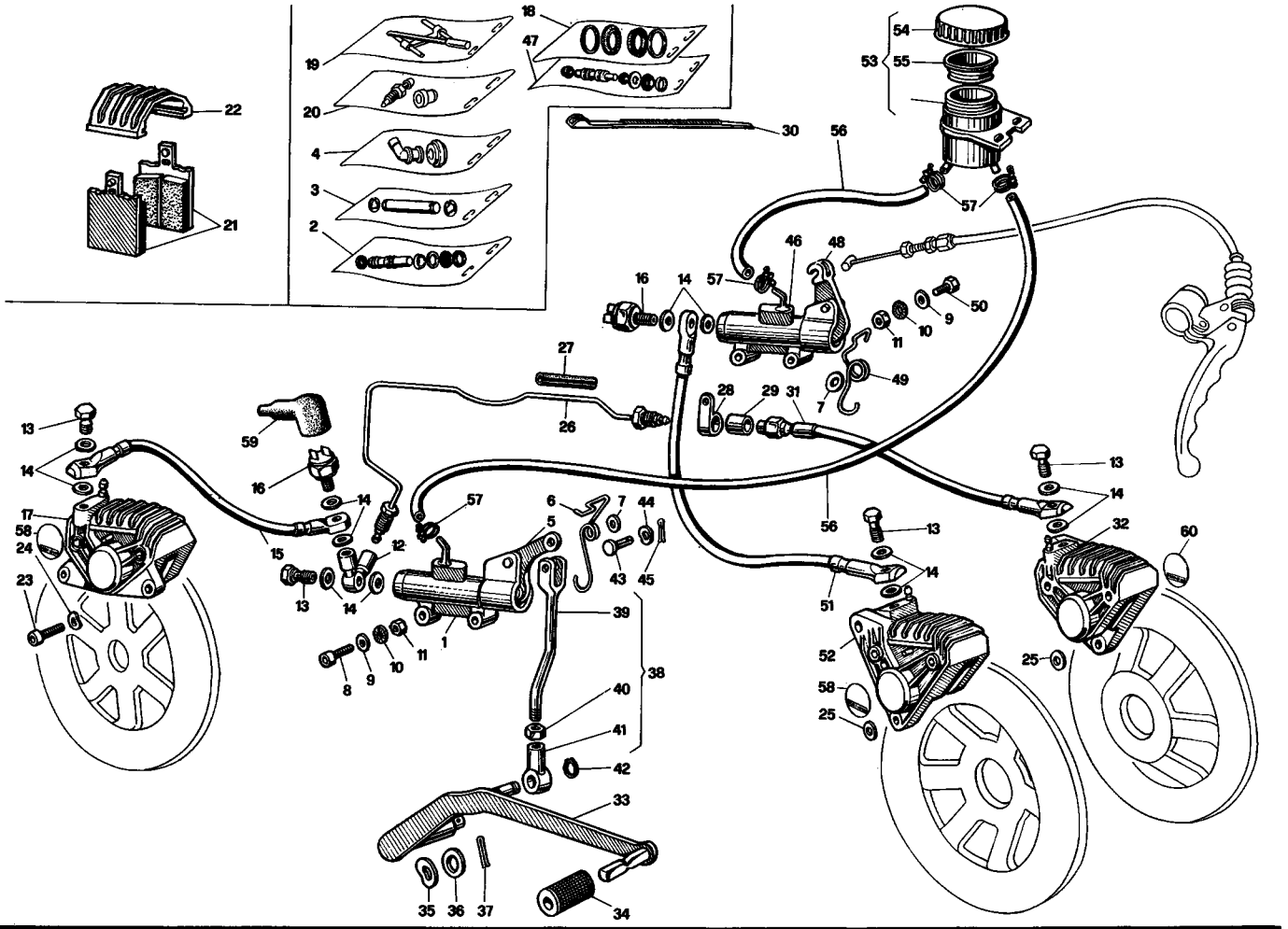

NOTE NOTES NOTES MARKE	POS. N.	N. COD. CODE No. No. CODE CODE Nr.	Q.tà Q.ty Q.té M.ge	DENOMINAZIONE	DESCRIPTION	DESIGNATION	BEZEICHNUNG
	25	95 10 02 51	0 ÷ 4	Rosetta di spallamento (mm 0,8)	Spacer washer (mm 0.8)	Rondelle d'épaulement (mm 0,8)	Einstellscheibe (mm 0,8)
	26	19 65 87 00	1	Tubazione rigida	Not flexible pipe	Tuyau rigide	Starrohr
	27	17 65 96 50	2	Fascia elastica	Clamp	Collier	Klemme
	28	62 43 65 00	1	Occhiello tubaz. fless.	Pipe eyelet	Oeillet tuyau	Rohranschlussöse
	29	90 71 61 42	1	Gommino antivibr.	Rubber	Caoutchouc	Gummistück
	30	14 60 96 50	2	Fascetta fiss. tubaz.	Clamp	Collier	Klemme
	31	14 65 88 51	1	Tubazione flessibile	Flexible pipe	Tuyau flexible	Bremsschlauch
	32	19 65 23 00	1	Pinza anter. sinistra	L.H. front caliper	Etrier AV G	Vord. Festsattel, L.
	33	19 67 70 00	1	Leva com. freni	Brake lever	Levier comm. frein	Bremsehebel
	34	14 25 10 01	1	Pedalino in gomma	Rubber pedal	Pédale en caoutchouc	Gummigleitschutze
	35	95 12 92 60	1	Rondella elastica	Spring washer	Rondelle élastique	Federscheibe
	36	95 00 42 15	1	Rondella piana	Washer	Rondelle	Scheibe
	37	95 50 02 27	1	Copiglia	Cotter pin	Goupille	Splint
	38		1	Tirante completo	Connecting rod, assy	Tige intermed. compl.	Zwischenstange, kpl.
	39	19 67 51 00	1	Tirante	Connecting rod	Tige intermédiaire	Zwischenstange
	40	92 70 00 73	1	Dado	Nut	Ecrou	Mutter
	41	18 25 75 51	1	Blocchetto	Block	Bloc	Block
	42	90 27 10 08	1	Anello Seeger	Ring	Jonc d'arrêt	Seegerring
	43	95 78 02 65	1	Spina	Pin	Goupille	Stift
	44	95 12 91 10	1	Rondella antivibr.	Washer	Rondelle	Scheibe
	45	95 50 02 22	1	Copiglia	Cotter pin	Goupille	Splint
	46	19 66 02 00	1	Pompa freno senza leva	Brake pump without lever	Pompe frein sans levier	Bremsepumpe ohne Hebel
	47	17 65 93 52	1	Gruppo rev. guarnizioni pompa freno anter.	Gaskets kit for front brake pump	Kit de joints pour pompe frein AV	Dichtung - Rep. - Satz für Vord. Bremsepumpe
	48	19 66 33 00	1	Leva com. pompa	Pump lever	Levier comm. pompe	Pumpehebel
	49	19 66 26 00	1	Molla	Spring	Ressort	Feder
	50	98 05 23 25	2	Vite	Screw	Vis	Schraube
	51	19 65 71 00	1	Tubazione flessibile	Flexible pipe	Tuyau flexible	Bremsschlauch
	52	19 65 22 00	1	Pinza idraulica dx	R.H. caliper	Etrier D	Festsattel, R.
	53	19 66 50 00	1	Serbatoio per fl. freni	Tank	Réservoir	Behalter
	54	14 66 11 00	1	Tappo per serbatoio	Tank tap	Bouchon du réserv.	Behälterstopfen
	55	14 66 13 00	1	Membrana a soffietto	Membran	Membrane	Membran
*	56	823 94 70 90		Tubazione	Pipe	Tuyau	Rohr
	57	19 15 78 00	4	Fascetta elastica	Clamp	Collier	Klemme

Seimm Moto Guzzi S.p.A. - 22054 Mandello del Lario (Co) - Tel. 731112 - 732512 - Tx: 38095 - 6/78 - 2500 K Printed in Italy

Dati indicativi soggetti a modifiche senza impegno di preavviso - All data are subject to modification without notice - Scanzorosciate (Bg)

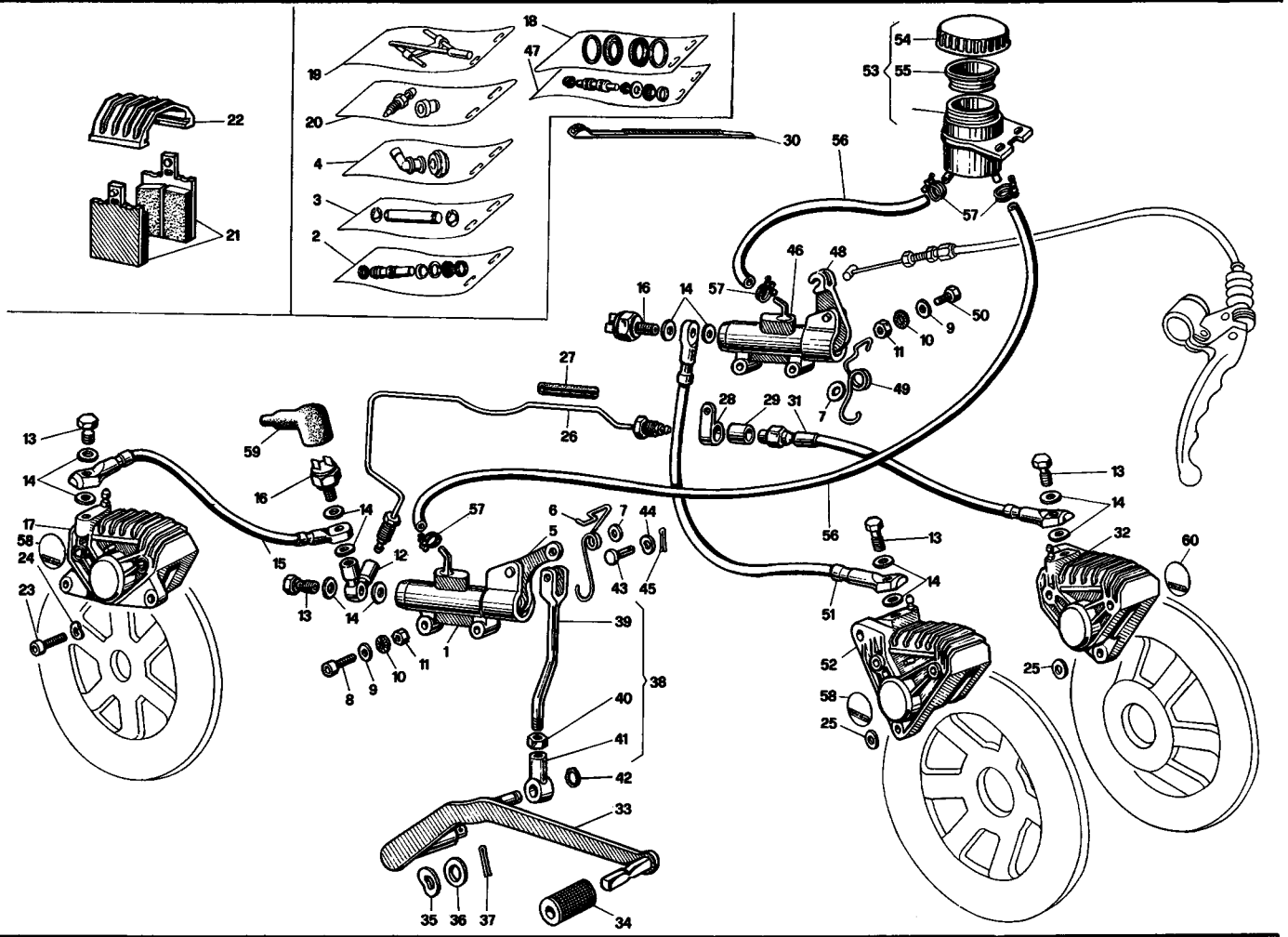

NOTE NOTES NOTES MARKE	POS. N.	N. COD. CODE No. No. CODE CODE Nr.	Q.tà Q.ty Q.té M.ge	DENOMINAZIONE	DESCRIPTION	DESIGNATION	BEZEICHNUNG
	58	19 65 49 00	2	Decalcom. per pinza dx e post. (Ferit I/D 334)	Decal for R.H. front & rear cal. (Ferit I/D 334)	Décalcom. pour étrier D AV et AR (Ferit I/D 334)	Abziehbild für R. Vord. u. Hint. Fests. (Ferit I/D 334)
	59	12 73 51 00	2	Cappuccio	Cap	Capuchon	Kappe
	60	19 65 27 00	1	Decalcom. per pinza sx anter. (Ferit I/D 346)	Decal for L.H. front caliper (Ferit I/D 346)	Décalcom. pour étrier G AV (Ferit I/D 346)	Abziehbild für Vord. L. Festsattel (Ferit I/D 346)

* **Specificare la quantità in metri (1 m - 2 m - ecc.) - Indicate quantity required in meters (1 m - 2 m - etc.)**
Indiquer la quantité en mètres (1 m - 2 m - etc.) - Lieferbar in Meter (1 m - 2 m - etc.) bestellen

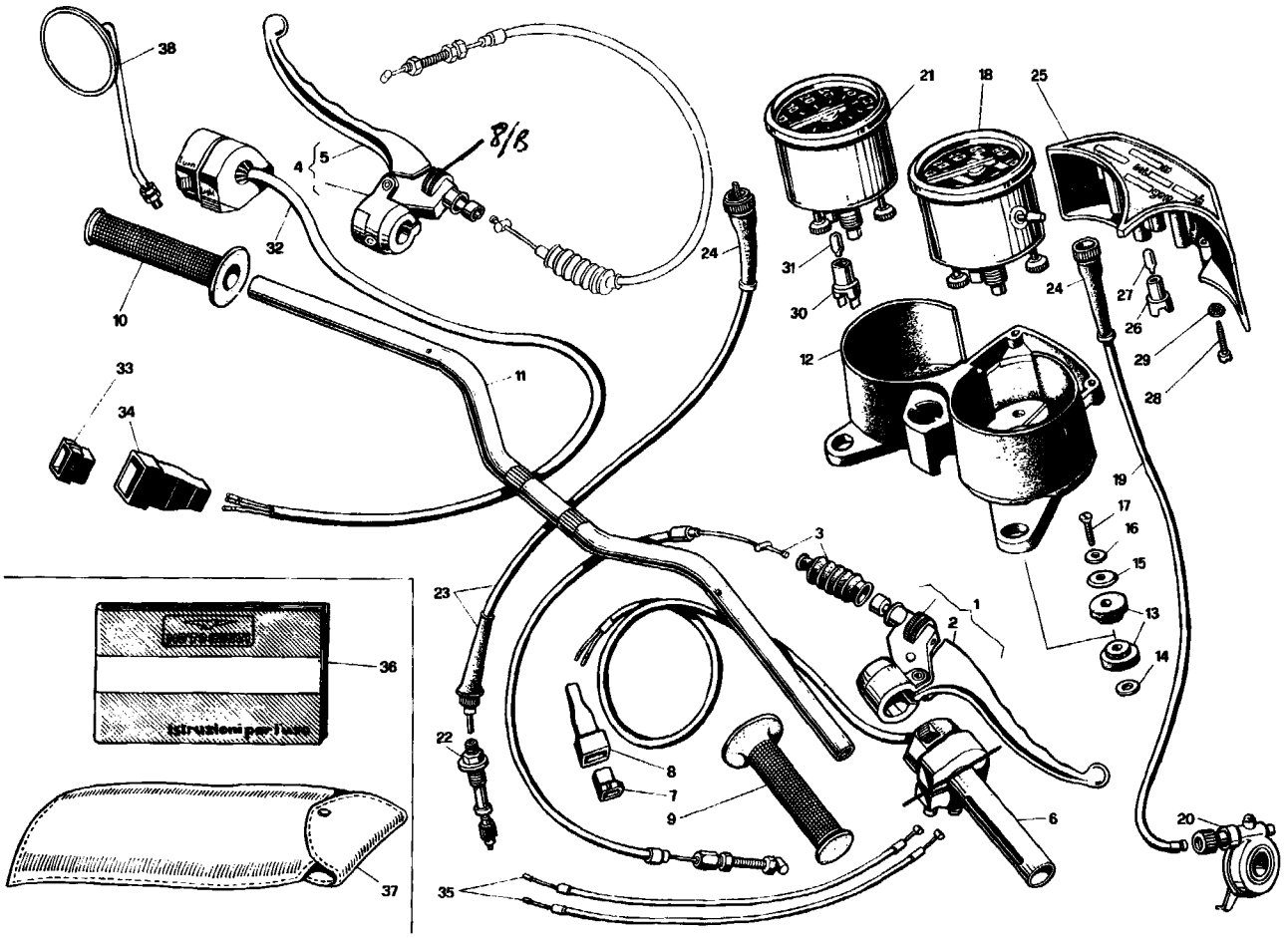

NOTE NOTES NOTES MARKE	POS. N.	N. COD. CODE No. No. CODE CODE Nr.	Q.tà Q.ty Q.té M.ge	DENOMINAZIONE	DESCRIPTION	DESIGNATION	BEZEICHNUNG
	1	19 60 54 00	1	Leva com. freno compl.	Brake lever, compl.	Levier comm. frein com.	Bremsehebel, kpl.
	2	19 60 56 00	1	Leva nuda	Lever	Levier	Hebel
	3	19 62 54 51	1	Trasmiss. com. freni	Brake cable	Câble d'embrayage	Kupplungskabel
	4	19 60 55 01	1	Leva com. friz. compl.	Clutch lever, compl.	Levier d'embr. compl.	Kupplungshebel, kpl.
	5	14 60 57 50	1	Leva nuda	Lever	Levier	Hebel
1760361	6	~~65 60 35 20~~	1	Impugnatura com. gas	Throttle control	Commande de gaz	Gasregelung
	7	61 74 05 50	1	Connettore a 3 vie	Connector	Connecteur	Verbinder
	8	17 75 58 00	1	Cappuccio	Cap	Capuchon	Kappe
	8/8	1760 18 50	1	SOLO SUPPORTO			
	9	65 60 35 00	1	Manopola destra	R.H. hand grip	Poignée D	Handgriff, R.
	10	65 60 30 00	1	Manopola sinistra	L.H. hand grip	Poignée G	Handgriff, L.
	11	65 60 03 00	1	Manubrio	Handle bar	Guidon	Lenker
	12	19 50 15 00	1	Cruscotto portastrum.	Instrument panel	Tableau de bord	Instrumentbrett
	13	14 50 22 50	4	Elemento elastico	Rubber ring	Anneau en caoutch.	Gummiring
	14	95 00 42 15	2	Rondella inferiore	Lower washer	Rondelle inférieure	Unterscheibe
	15	95 09 01 42	2	Rondella superiore	Upper washer	Rondelle supérieure	Oberescheibe
	16	18 57 78 50	2	Rondella esterna	Outside washer	Rondelle extérieure	Aussenscheibe
	17	98 27 06 21	2	Vite	Screw	Vis	Schraube
	18	19 76 15 00	1	Tachimetro contakm.	Speedometer - Km. ind.	Tachym. Compt. Km.	Tachometer - Km. Zähler
	19	19 76 04 00	1	Trasmissione contakm.	Km. indicator cable	Câble compt. km.	Km. Zählerkabel
	20	39 76 25 01	1	Rinvio compl.	Transmission compl.	Transmission compl.	Vorgelege, kpl.
●	21	19 76 72 00	1	Contagiri	Rev. counter	Compte-tours	Drehzahlmesser
	22	14 76 92 00	1	Bussola e pignone (Z = 14)	Bush and pinion (Z = 14)	Douille et pignon (Z = 14)	Buchse und Tachoritzel (Z = 14)
	23	19 76 81 00	1	Trasmiss. contagiri	Rev. counter cable	Câble compte-tours	Drehzahlmesserkabel
	24	17 76 22 00	2	Guaina	Hose	Gaine	Schutzschlauch
	25	14 76 69 50	1	Supporto con gemme	Support with name	Support avec emblème	Halter mit Schild
	26	14 76 86 51	8	Portalampade	Lamp socket	Douille d'ampoule	Glühlampenfassung
	27	93 45 01 40	8	Lampadine spie (12 V - 1,2 W)	Pilot light (12 V - 1,2 W)	Témoin (12 V - 1,2 W)	Anzeigelicht (12 V - 1,2 W)
	28	98 83 02 25	2	Vite	Screw	Vis	Schraube
	29	95 02 11 05	2	Rondella	Washer	Rondelle	Scheibe
	30	17 76 06 50	2	Portalampada	Lamp socket	Douille d'ampoule	Glühlampenfassung
	31	17 76 21 50	2	Lampada (12V - 3W)	Bulb (12V - 3W)	Ampoule (12V - 3W)	Lampe (12V - 3W)
	32	65 73 80 20	1	Dispos. com. avvis. ac.	Horn control	Dispos. comm. avv. ac.	Hupevorrichtung
	33	61 74 05 51	1	Connettore 12 vie	Connector	Connecteur	Verbinder
	34	17 75 57 00	1	Cappuccio	Cap	Capuchon	Kappe
	35	19 11 75 50	2	Trasmiss. com. gas	Gas cable	Câble du gaz	Gaskabel

Seimm Moto Guzzi S.p.A. - 22054 Mandello del Lario (Co) - Tel. 731112 - 732512 - Tx: 38095 - 6/78 - 2500 K Printed in Italy

Dati indicativi soggetti a modifiche senza impegno di preavviso - All data are subject to modification without notice

- Scanzorosciate (Bg)

www.guzzitek.org - Revente Interdite - Revendita Vietata - Resaling Forbiden - Wiederverkauf Verboten

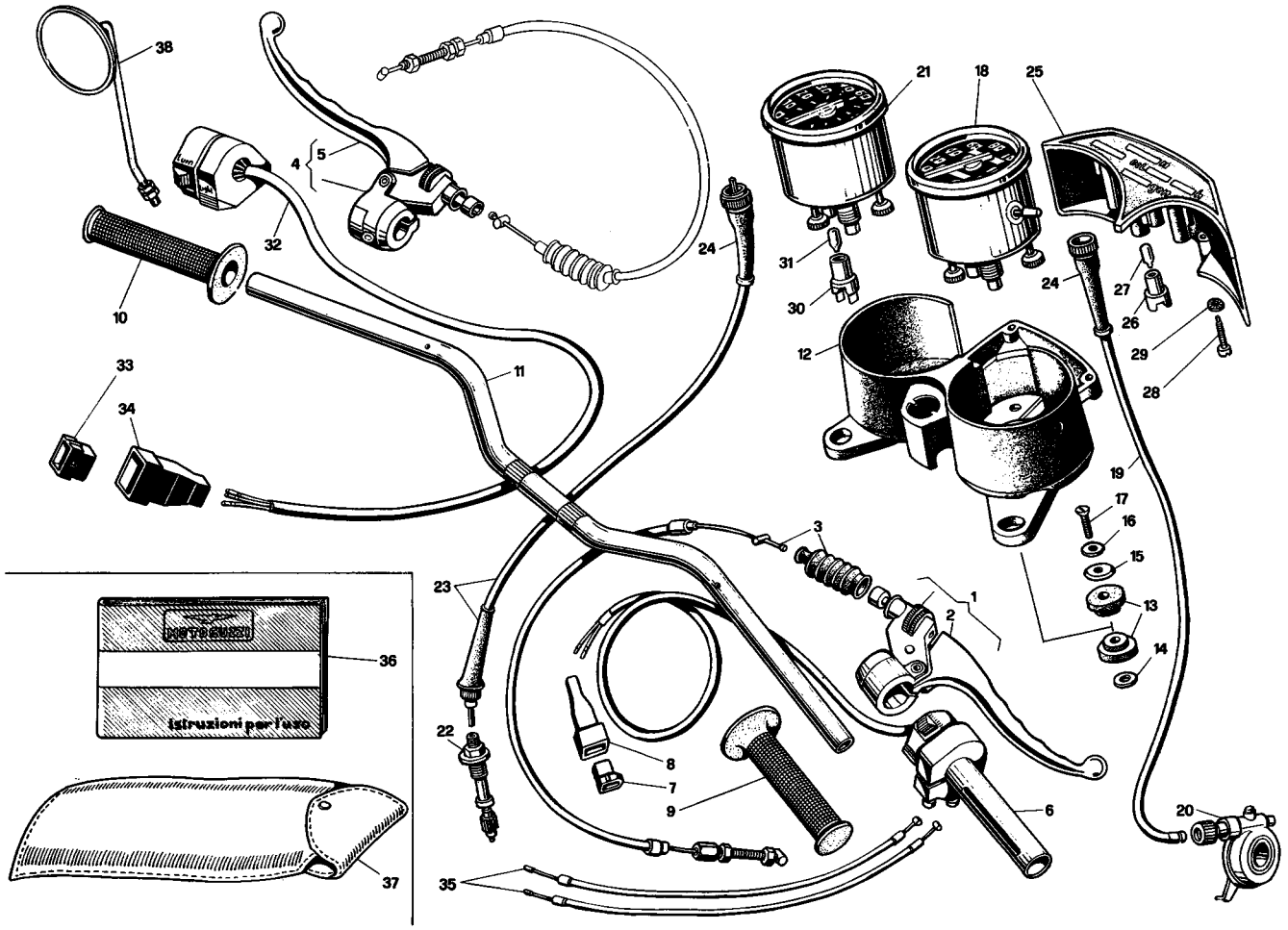

NOTE NOTES NOTES MARKE	POS. N.	N. COD. CODE No. No. CODE CODE Nr.	Q.tà Q.ty Q.té M.ge	DENOMINAZIONE	DESCRIPTION	DESIGNATION	BEZEICHNUNG
●	36	19 90 00 00	1	Libretto istruz. (I)	Rider's handbook (I)	Manuel d'entretien (I)	Betriebsanleitung (I)
●	36	19 90 00 01	1	Libretto istruz. (GB)	Rider's handbook (GB)	Manuel d'entret. (GB)	Betriebsanleitung (GB)
●	36	19 90 00 05	1	Libretto istruz. (D)	Rider's handbook (D)	Manuel d'entret. (D)	Betriebsanleitung (D)
	36	19 90 00 02	1	Libretto istruz. (F) V35 - V50	Rider's handbook (F) V35 - V50	Manuel d'entret. (F) V35 - V50	Betriebsanleitung (F) V35 - V50
	37	19 92 99 00	1	Dotazione completa	Complete equipment	Trousse à outils, compl.	Werkzeugkasten
	38	14 76 98 50	1	Specchio retrovisivo (fornito a richiesta)	Driving mirror (optional)	Rétroviseur (sur demande)	Rückblickspiegel (auf Wunsch)

● **I sottonotati particolari rappresentano le varianti per il mod. V50**
Following items refer to V50 mod. only
Les pièces indiquées ci-dessous représentent les variantes pour le mod. V50
Die untergegebene Teile sind nur für Modell V50 gültig

	21	14 76 72 50	1	Contagiri	Rev. counter	Compte-tours	Drehzahlmesser
	36	19 90 00 51	1	Libretto istruz. (GB)	Rider's handbook (GB)	Manuel d'entret. (GB)	Betriebsanleitung (GB)
	36	19 90 00 53	1	Libretto istruz. (D)	Rider's handbook (D)	Manuel d'entret. (D)	Betriebsanleitung (D)
	36	19 90 00 54	1	Libretto istruz. (I)	Rider's handbook (I)	Manuel d'entret. (I)	Betriebsanleitung (I)

Seimm Moto Guzzi S.p.A. - 22054 Mandello del Lario (Co) - Tel. 731112 - 732512 - Tx: 38095 - 6/78 - 2500 K Printed in Italy

Dati indicativi soggetti a modifiche senza impegno di preavviso - All data are subject to modification without notice - Scanzorosciate (Bg)

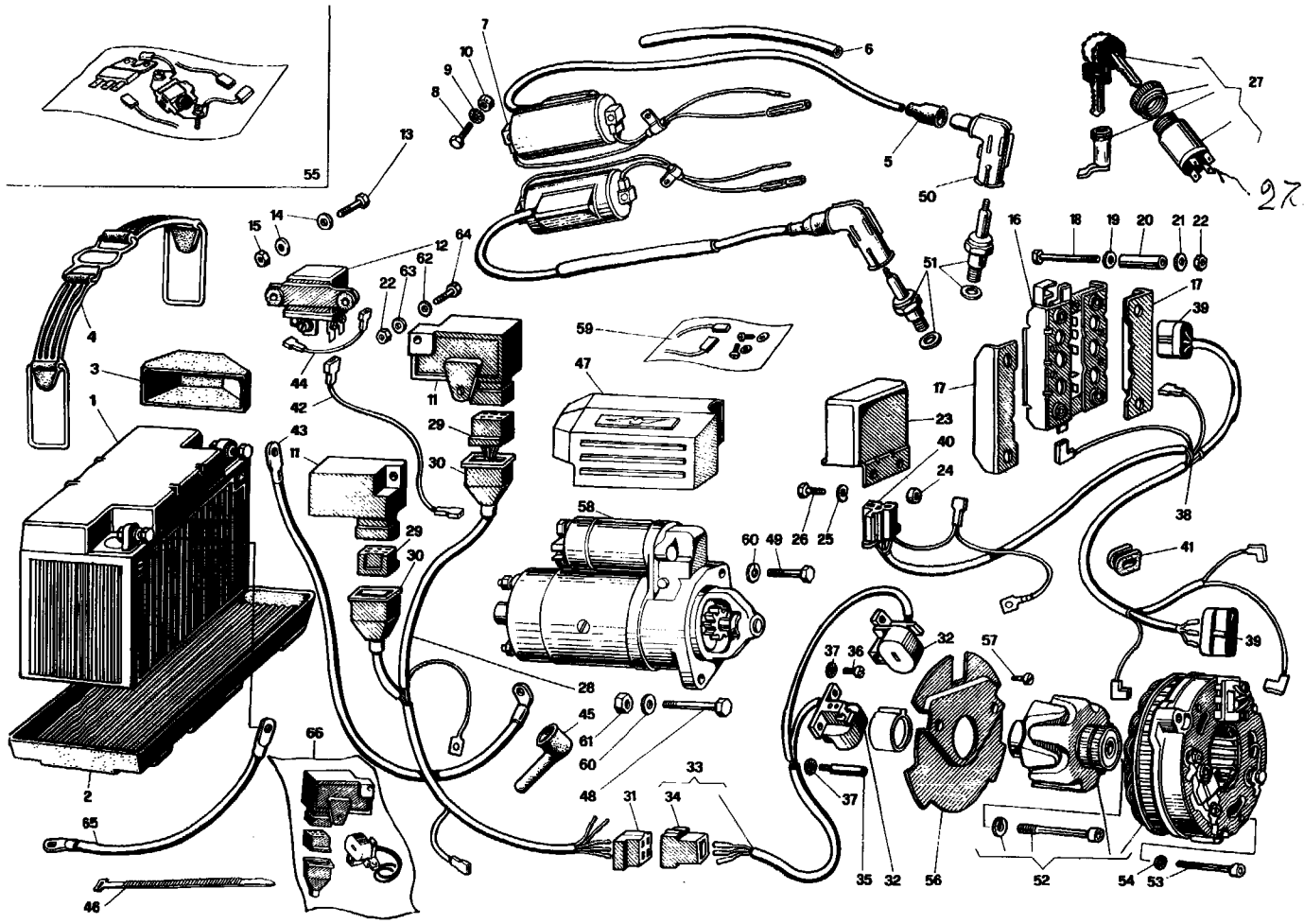

NOTE NOTES NOTES MARKE	POS. N.	N. COD. CODE No. No. CODE CODE Nr.	Q.tà Q.ty Q.té M.ge	DENOMINAZIONE	DESCRIPTION	DESIGNATION	BEZEICHNUNG
	1	14 70 45 05	1	Accumulatore 12V - 32Ah (a richiesta)	Battery 12 V - 32 Ah (optional)	Batterie 12 V - 32 Ah (sur demande)	Batterie 12 V - 32 Ah (auf Wunsch)
	1	14 70 45 50	1	Accumulatore 12 V - 20 Ah	Battery 12 V - 20 Ah	Batterie 12 V - 20 Ah	Batterie 12 V - 20 Ah
	2	14 70 70 00	1	Vaschetta	Battery holder	Plateau de batterie	Batterieplatte
	3	14 70 53 50	1	Cuneo ancor. accum.	Wedge	Coin	Keil
	4	19 70 48 00	1	Staffa fiss. accum.	Flexible clamp	Collier élastique	Elast. Klemme
	5	14 71 76 00	2	Cappuccio protez.	Protective cap	Chapeau de protect.	Schutzhülse
	6	19 71 86 00	2	Guaina per filo cand.	Sheath	Gaine	Schutzhülle
	7	19 71 65 00	2	Bobina d'accensione	Ignition coil	Bobine d'allumage	Zündspule
	8	98 20 25 25	5	Vite	Screw	Vis	Schraube
	9	95 02 11 05	5	Rondella ondulata	Washer	Rondelle	Scheibe
	10	92 60 22 05	5	Dado	Nut	Ecrou	Mutter
	11	19 72 14 00	2	Centralina (vedi pos. 66)	Box (see pos. 66)	Centrale (voir pos. 66)	Zentrale (sehen Pos. 66)
	12	12 73 25 00	1	Teleruttore avviam.	Relay	Relais	Relais
	13	98 05 42 12	2	Vite	Screw	Vis	Schraube
	14	95 10 00 59	4	Rondella	Washer	Rondelle	Scheibe
	15	92 60 22 05	2	Dado	Nut	Ecrou	Mutter
	16	17 70 43 00	1	Raddrizzatore Bosch	Rectifier Bosch	Redresseur Bosch	Gleichrichter Bosch
	17	61 70 42 00	2	Coperchio isolante	Cover	Couvercle	Deckel
	18	98 05 22 45	4	Vite	Screw	Vis	Schraube
	19	95 10 01 41	4	Rondella piana	Washer	Rondelle	Scheibe
	20	91 18 06 27	4	Tubetto distanziale	Spacer pipe	Tuyau entretoise	Distanzstückrohr
	21	95 12 91 00	4	Rondella ondulata	Washer	Rondelle	Scheibe
	22	92 60 22 05	8	Dado	Nut	Ecrou	Mutter
	23	17 70 38 00	1	Regolatore Bosch	Regulator Bosch	Régulateur Bosch	Spannungsregler Bosch
	24	91 18 06 05	2	Distanziale	Spacer	Entretoise	Distanzstück
	25	95 12 91 00	2	Rondella ondulata	Washer	Rondelle	Scheibe
	26	98 05 42 14	2	Vite	Screw	Vis	Schraube
	27	19 73 68 01	1	Commutatore d'accens. e serratura tappo carbur.	Ignition switch and fuel tap lock	Contacteur d'allumage et serrure bouchon carb.	Zündschalter und Kraftstoffstopfenschluss
	28	19 72 21 00	1	Gruppo cavi acc. elettr.	Cable kit	Kit de câbles	Kabelsatz
	29	19 72 17 00	2	Blocchetto	Block	Bloc	Block
	30	19 72 15 00	2	Cappuccio di protez.	Protective cap	Chapeau de protect.	Schutzhülse
	31	17 75 62 00	1	Connettore a 4 vie F	Connector	Branchement	Steckdose
	32	63 72 16 00	2	Captatore magnetico	Magn. picking up	Captateur magnétique	Magn. Fang
	33	19 72 22 00	1	Cablaggio compl.	Wire assembly	Groupe de fils	Kabelsatz

Seimm Moto Guzzi S.p.A. - 22054 Mandello del Lario (Co) - Tel. 731112 - 732512 - Tx: 38095 - 6/78 - 2500 K Printed in Italy

Dati indicativi soggetti a modifiche senza impegno di preavviso - All data are subject to modification without notice - Scanzorosciate (Bg)

www.guzzitek.org - Revente Interdite - Revendita Vietata - Resaling Forbiden - Wiederverkauf Verboten

V35-V50

Tavola - Drawing
Table - Bild **18**

ACCENSIONE
IGNITION
ALLUMAGE
ZÜNDUNG

SEIMM
MOTO GUZZI

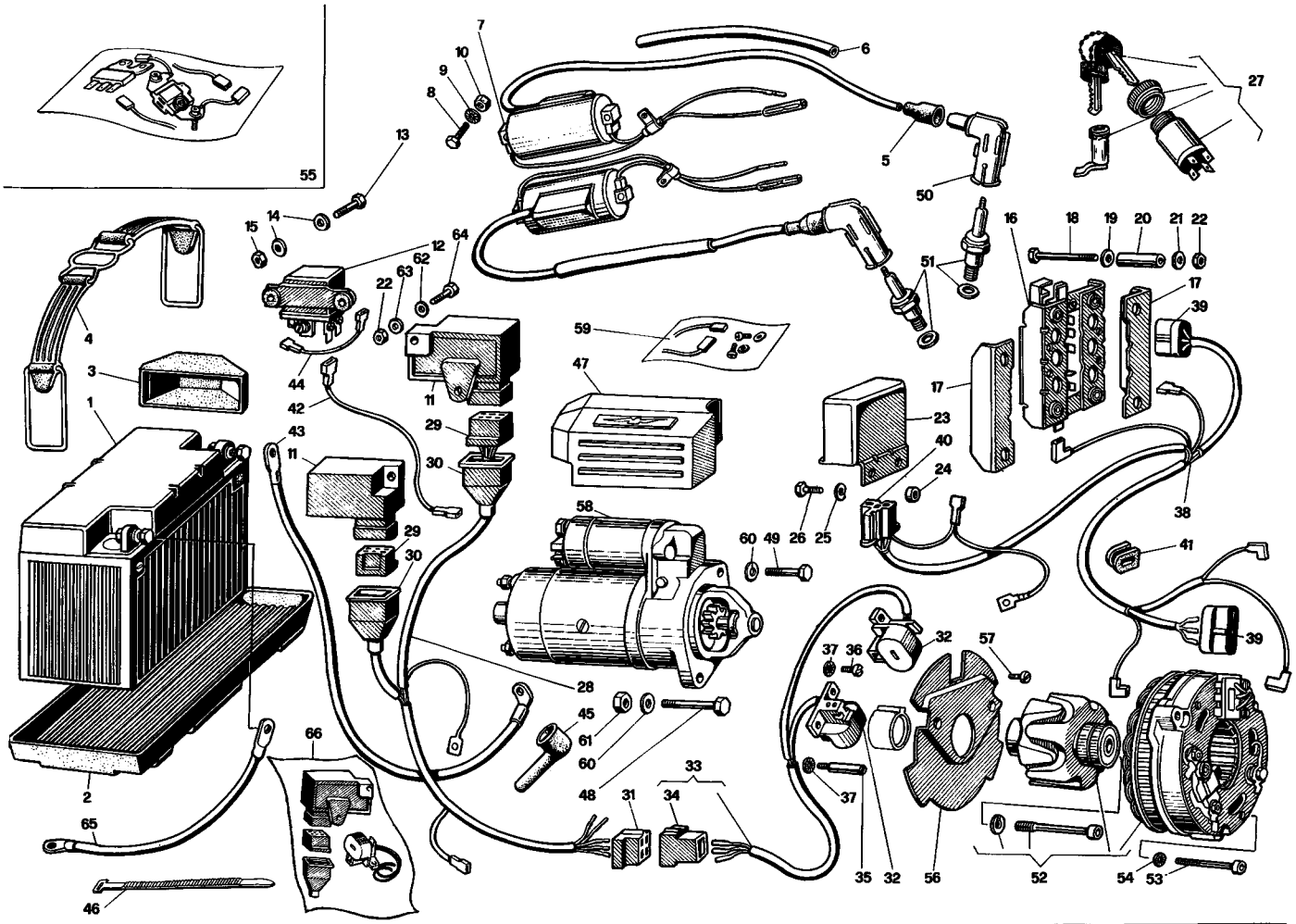

NOTE NOTES NOTES MARKE	POS. N.	N. COD. CODE No. No. CODE CODE Nr.	Q.tà Q.ty Q.té M.ge	DENOMINAZIONE	DESCRIPTION	DESIGNATION	BEZEICHNUNG
	34	17 73 63 00	1	Connettore a 4 vie M	Connector	Branchement	Steckdose
	35	19 72 26 00	2	Colonnetta	Support	Support	Halter
	36	98 20 25 10	2	Vite	Screw	Vis	Schraube
	37	95 02 11 05	4	Rondella elast. dentell.	Tooth washer	Rondelle dentée	Zahnscheibe
	38	19 74 74 00	1	Gruppo cavi alter.	Wire assembly	Groupe de fils	Kabelsatz
	39	61 71 25 00	2	Connettore a 3 vie	Connector	Branchement	Steckdose
	40	61 71 26 00	1	Connettore a 3 vie	Connector	Branchement	Steckdose
	41	19 00 77 00	1	Gommino passacavi	Rubber	Caoutchouc	Gummistück
	42	19 74 82 00	1	Cavo coll. tel.	Cable	Câble	Kabel
	43	19 74 80 00	1	Cavo dalla batt. al m.	Cable	Câble	Kabel
	44	19 74 83 00	1	Cavo da cont. del tel.	Cable	Câble	Kabel
	45	19 70 71 00	2	Cappuccio	Cap	Capuchon	Kappe
	46	14 60 96 50	12	Fascetta tenuta cavi	Clamp	Collier	Schelle
	47	19 73 33 50	1	Protezione	Guard	Protection	Schutz
	48	98 05 24 40	1	Vite	Screw	Vis	Schraube
	49	98 05 24 35	1	Vite	Screw	Vis	Schraube
	50	14 71 74 00	2	Attacco per cavo can.	Spark plug cap	Embout de bougie	Zündkerzenstecker
	51	19 71 70 00	2	Candela (Champion N6Y)	Spark plug (Champion N6Y)	Bougie (Champion NY6)	Zündkerze (Champion N6Y)
	51	19 71 70 01	2	Candela (Marelli CW 9 PL)	Spark plug (Marelli CW 9 PL)	Bougie (Marelli CW 9 PL)	Zündkerze (Marelli CW 9 PL)
	51	19 71 70 02	2	Candela (Bosch W 260 T30)	Spark plug (Bosch W 260 T30)	Bougie (Bosch W 260 T30)	Zündkerze (Bosch W 260 T30)
	51	19 71 70 03	2	Candela (Lodge 2HLNY)	Spark plug (Lodge 2HLNY)	Bougie (Lodge 2HLNY)	Zündkerze (Lodge 2HLNY)
	52	17 71 24 00	1	Generatore 14V - 20/21 A	Generator 14V - 20/21 A	Générateur 14V - 20/21 A	Stromgenerator 14V - 20/21 A
	53	98 62 02 45	3	Vite	Screw	Vis	Schraube
	54	95 02 11 05	3	Rosetta elastica	Spring washer	Rondelle élastique	Federscheibe
	55	17 71 99 00	1	Serie revis. generat.	Generator kit	Kit de générateur	Stromgener. Rep.-Satz
	56	19 72 25 00	1	Protezione captat.	Protection	Protection	Schutz
	57	98 28 04 12	2	Vite	Screw	Vis	Schraube
	58	14 73 07 06	1	Motorino avviamento	Starter	Démarreur	Anlassmotor
	59	14 73 05 70	1	Gruppo rev. motorino	Starter kit	Kit de démarreur	Anlassmotor - Rep.-Satz
	60	95 00 42 08	2	Rosetta	Washer	Rondelle	Scheibe
	61	92 60 22 08	1	Dado	Nut	Ecrou	Mutter
	62	95 00 42 05	2	Rondella superiore	Upper washer	Rondelle supérieure	Oberscheibe

Seimm Moto Guzzi S.p.A. - 22054 Mandello del Lario (Co) - Tel. 731112 - 732512 - Tx: 38095 - 6/78 - 2500 K Printed in Italy

Dati indicativi soggetti a modifiche senza impegno di preavviso - All data are subject to modification without notice - Scanzorosciate (Bg)

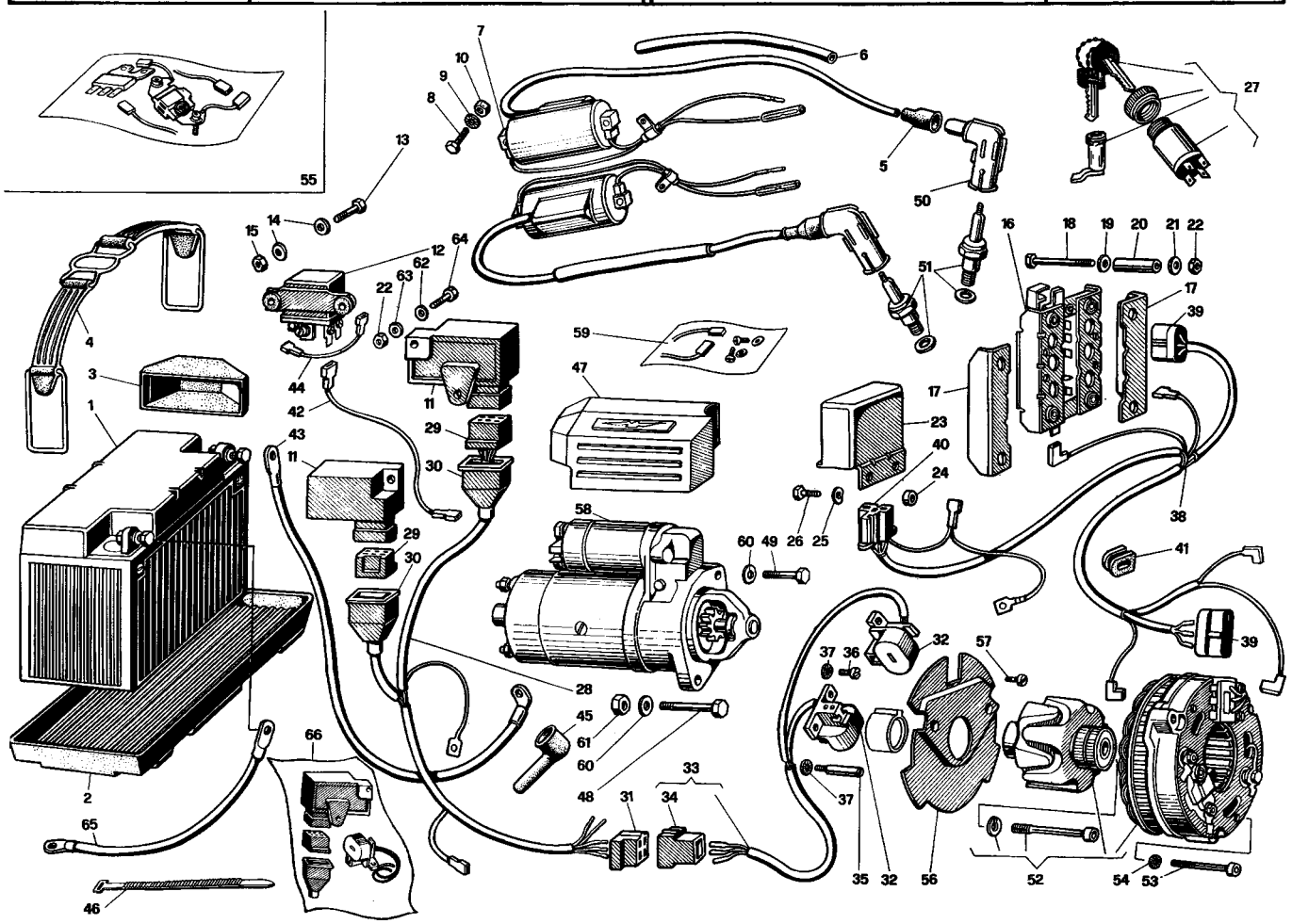

NOTE NOTES NOTES MARKE	POS. N.	N. COD. CODE No. No. CODE CODE Nr.	Q.tà Q.ty Q.té M.ge	DENOMINAZIONE	DESCRIPTION	DESIGNATION	BEZEICHNUNG
	63	95 10 00 59	6	Rondella	Washer	Rondelle	Scheibe
	64	98 05 42 16	4	Vite	Screw	Vis	Schraube
	65	19 74 84 00	1	Cavo da batt. a massa	Cable	Câble	Kabel
	66	19 72 13 00	2	Impianto accensione (comprende i particolari pos. 11 - 29 - 30 - 32 - quantità 1)	Electronic ignition (items pos. no. 11 - 29 - 30 - 32 included - quantity 1)	Allumage électronique (comprend les pièces nr. pos. 11 - 29 - 30 - 32 - quantité 1)	Elektr. Zündung (Teile Pos. Nr. 11 - 29 - 30 - 32 einhalt - Menge 1)

Seimm Moto Guzzi S.p.A. - 22054 Mandello del Lario (Co) - Tel. 731112 - 732512 - Tx: 38095 - 6/78 - 2500 K Printed in Italy

Dati indicativi soggetti a modifiche senza impegno di preavviso - All data are subject to modification without notice

Scanzorosciate (Bg)

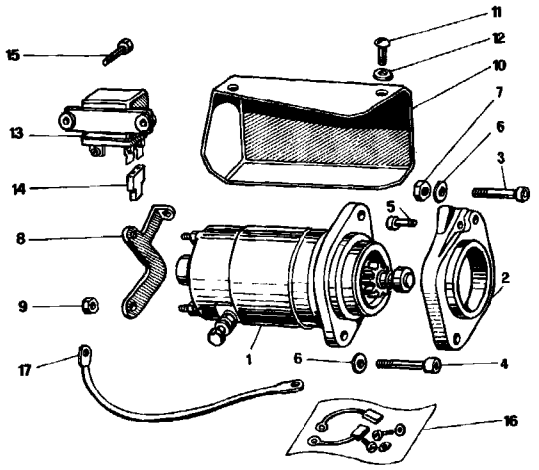

NOTE NOTES NOTES MARKE	POS. N.	N. COD. CODE No. No. CODE CODE Nr.	Q.tà Q.ty Q.té M.ge	DENOMINAZIONE	DESCRIPTION	DESIGNATION	BEZEICHNUNG
	1	*	1	Motorino avv. Bendix	Starter Bendix	Démarreur Bendix	Anlassmotor Bendix
	2	14 73 18 06	1	Piastra per motorino	Plate	Plaque	Platte
	3	98 82 04 50	1	Vite	Screw	Vis	Schraube
	4	98 82 04 35	1	Vite	Screw	Vis	Schraube
	5	98 82 24 20	1	Vite	Screw	Vis	Schraube
	6	95 00 42 08	2	Rosetta	Washer	Rondelle	Scheibe
	7	92 60 22 08	2	Dado	Nut	Ecrou	Mutter
	8	19 73 38 00	1	Sostegno prot. motor.	Support	Support	Halter
	9	92 63 01 05	2	Dado	Nut	Ecrou	Mutter
	10	19 73 32 00	1	Protezione	Guard	Protection	Schutz
	11	98 31 06 12	2	Vite	Screw	Vis	Schraube
	12	95 00 42 06	2	Rondella	Washer	Rondelle	Scheibe
	13	14 70 76 05	1	Teleruttore avviam.	Relay	Relais	Relais
	14	93 40 08 63	2	Faston maschio	Male "faston"	"Faston" mâle	Zapfen "Faston"
	15	98 05 22 20	2	Vite	Screw	Vis	Schraube
	16	14 73 05 71	1	Gruppo rev. motor.	Starter kit	Kit de démarreur	Anlassmotor Rep.-Satz
	17	19 74 84 00	3	Cavo per batt. teler.	Cable	Câble	Kabel

*** Il motorino avviamento Bendix non viene fornito a ricambio; in sostituzione viene fornito il motorino N. 14 73 07 06, da montarsi con i componenti previsti su tavola 18 - Pos. 12 - 42 - 43 - 44 - 47 - 48 - 49**
Starter Bendix is not available as spare parts; starter No. 14 73 07 06 is supplied on its place and it must be assembled with items indicated on drawing 18 - Pos. 12 - 42 - 43 - 44 - 47 - 48 - 49
Le démarreur Bendix n'est pas disponible comme pièce detachée; le démarreur Nr. 14 73 07 06 est fourni à sa place et il doit être assemblé avec les pièces indiquées sur la table 18 - Nr. Pos. 42 - 43 - 44 - 47 - 48 - 49
Anlassmotor Bendix wird nicht als Ersatzteil geliefert; an seiner Stelle wird jetzt der Anlassmotor Nr. 14 73 07 06 geliefert, der mit den auf Bild 18 Positionnummern 12 - 42 - 43 - 44 - 47 - 48 gezeichneten Teilen aufgebaut werden muss.

Seimm Moto Guzzi S.p.A. - 22054 Mandello del Lario (Co) - Tel. 731112 - 732512 - Tx: 38095 - 6/78 - 2500 K Printed in Italy

Dati indicativi soggetti a modifiche senza impegno di preavviso - All data are subject to modification without notice

- Scanzorosciate (Bg)

www.guzzitek.org - Revente Interdite - Revendita Vietata - Resaling Forbiden - Wiederverkauf Verboten

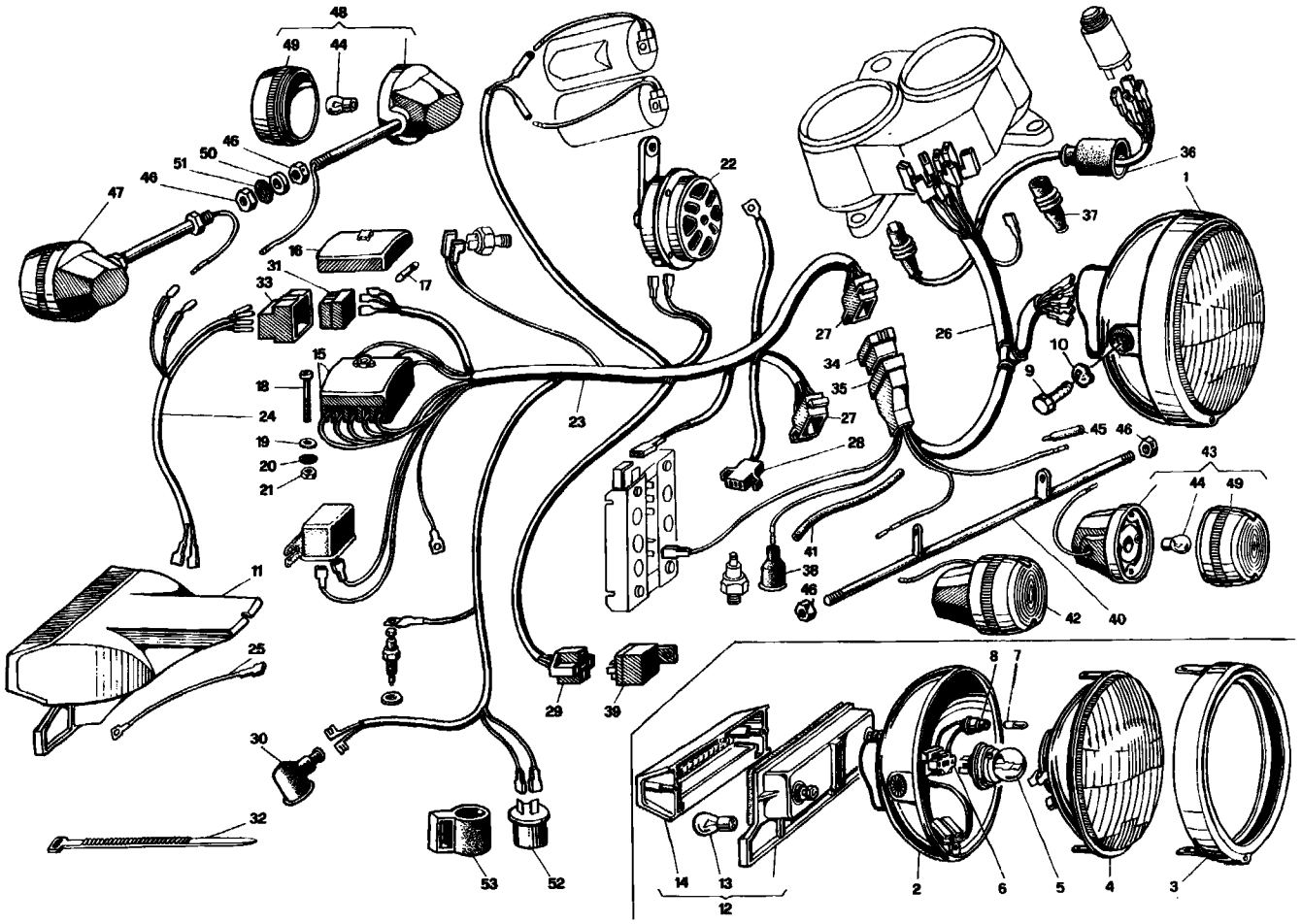

NOTE NOTES NOTES MARKE	POS. N.	N. COD. CODE No. No. CODE CODE Nr.	Q.tà Q.ty Q.té M.ge	DENOMINAZIONE	DESCRIPTION	DESIGNATION	BEZEICHNUNG
28740533	1	~~14 74 04 00~~ 19740200	1	Proiettore anteriore	Headlight	Projecteur AV	Vord. Scheinwerfer
	2	14 74 04 58	1	Calotta	Body	Boîtier	Gehäuse
	3	14 74 04 56	1	Ghiera nero opaco	Mat black ring nut	Embout noir opaque	Opakschwarz Haltering
	4	~~14 74 04 56~~	1	Gruppo ottico	Head lamp	Optique de phare	Scheinwerfer Einsatz
	5	93 45 02 31	1	Lampada a sfera 40/45 W - 12 V	Bulb 40/45 W - 12 V	Ampoule 40/45 W - 12 V	Glühlampe 40/45 W - 12 V
	6	17 74 04 01	1	Zoccolo presa corrente	Socket	Douille	Anschluss-stecker
	7	93 45 01 19	1	Lampada luce città 4 W - 12 V	Lamp 4 W - 12 V	Lampe 4 W - 12 V	Lampe 4 W - 12 V
	8	17 74 04 05	1	Portalampada con cavo	Socket	Douille d'ampoule	Lampenfassung
	9	98 82 25 20	2	Vite fiss. proiettore	Screw	Vis	Schraube
	10	95 12 01 05	2	Rosetta elastica	Spring washer	Rondelle élastique	Federscheibe
	11	19 74 09 00	1	Fanalino post. compl.	Back light, compl.	Lanterne AR, compl.	Rücklicht, kpl.
	12	65 74 09 00	1	Fanalino posteriore	Back light	Lanterne AR	Rücklicht
	13	93 45 02 23	2	Lampada	Lamp	Lampe	Lampe
	14	65 74 17 00	1	Coppetta per fanalino	Cap	Capuchon	Kappe
	15	19 74 30 00	1	Morsettiera portafus.	Fuse box	Boîte de fusibles	Sicherungsdose
	16	19 74 31 00	1	Coperchio morsett.	Cover	Couvercle	Deckel
	17	17 74 25 50	6	Fusibile (16 A)	Fuse (16 A)	Fusible (16 A)	Schmelzeinsatz (16 A)
	18	98 20 25 30	2	Vite	Screw	Vis	Schraube
	19	95 00 02 05	2	Rondella piana	Washer	Rondelle	Scheibe
	20	95 02 11 05	2	Rondella dentellata	Tooth washer	Rondelle dentée	Zahnscheibe
	21	92 60 22 05	2	Dado	Nut	Ecrou	Mutter
	22	14 74 37 00	1	Avvisatore acustico	Horn	Avertisseur acoustique	Hupe
	23	19 74 71 00	1	Gruppo princip. cavi	Cable kit	Kit de câbles	Kabelsatz
	24	19 74 73 00	1	Gruppo cavi	Cable kit	Kit de câbles	Kabelsatz
	25	14 74 81 00	1	Cavo massa	Earthing cable	Fil de masse	Massband
	26	19 74 72 00	1	Gruppo cavi	Cable kit	Kit de câbles	Kabelsatz
	27	19 72 31 00	2	Connettore 12 vie f.	Connector	Branchement	Steckdose
	28	19 72 30 00	1	Connettore 3 vie f.	Connector	Branchement	Steckdose
	29	19 73 24 00	1	Presa pentapolare	Coupling	Prise	Gang
	30	12 73 51 00	1	Cappuccio per inter.	Cap	Capuchon	Kappe
	31	17 75 62 00	1	Connettore 4 vie m.	Connector	Branchement	Steckdose
	32	14 60 96 50	2	Fascetta	Clamp	Collier	Schelle
	33	17 73 63 00	1	Connettore 4 vie f.	Connector	Branchement	Steckdose
	34	61 74 05 51	1	Connettore 12 vie m.	Connector	Branchement	Steckdose
	35	17 75 57 00	1	Cappuccio connettore	Cap	Capuchon	Kappe

Seimm Moto Guzzi S.p.A. - 22054 Mandello del Lario (Co) - Tel. 731112 - 732512 - Tx: 38095 - 6/78 - 2500 K Printed in Italy

Dati indicativi soggetti a modifiche senza impegno di preavviso - All data are subject to modification without notice - Scanzorosciate (Bg)

www.guzzitek.org - Revente Interdite - Revendita Vietata - Resaling Forbiden - Wiederverkauf Verboten

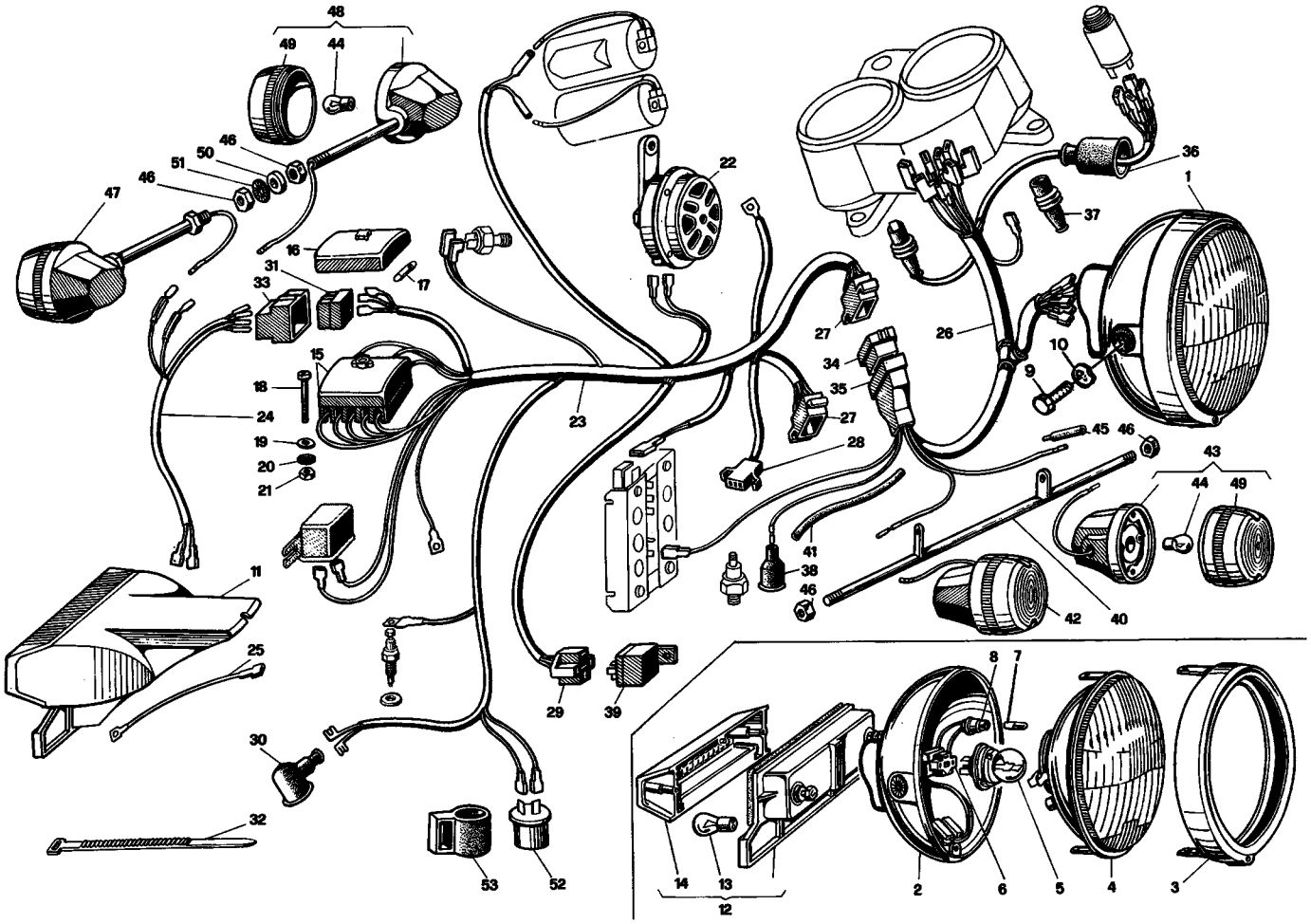

NOTE NOTES NOTES MARKE	POS. N.	N. COD. CODE No. No. CODE CODE Nr.	Q.tà Q.ty Q.té M.ge	DENOMINAZIONE	DESCRIPTION	DESIGNATION	BEZEICHNUNG
	36	25 74 13 25	1	Cappuccio protez.	Protective cap	Chapeau de protect.	Schutzhülse
	37	17 75 53 00	2	Cappuccio protez.	Protective cap	Chapeau de protect.	Schutzhülse
	38	12 71 76 00	1	Cappuccio per trasm.	Cap	Chapeau	Kappe
	39	19 73 25 00	1	Teleruttore 12V	Relay 12V	Relais 12V	Relais 12V
	40	19 75 13 00	1	Supp. ant. ind. direz.	Fr. ind. support	Support clign. AV	Vorderblinker Halter
*	41	823 92 00 80		Guaina per cavo nera	Hose	Gaine	Hülse
	42	14 75 06 50	1	Indicatore destro	R.H. indicator	Clignotant D	Blinker, R.
	43	14 75 06 51	1	Indicatore sinistro	L.H. indicator	Clignotant G	Blinker, L.
	44	93 45 01 29	4	Lampada 12V - 21W	Lamp 12V - 21W	Lampe 12V - 21W	Lampe 12V - 21W
*	45	823 92 20 37		Guaina cavo lampegg. sinistro (verde)	L.H. blinker cable hose (green)	Gaine câble clignot. G (vert)	Blinkerkabel, L. Hülse (grün)
	46	92 60 24 11	4	Dado	Nut	Ecrou	Mutter
	47	18 75 06 57	1	Indicat. poster. destro	R.H. rear indicator	Clignotant AR D	Hint. Blinker, R.
	48	18 75 06 56	1	Indicat. poster. sinistro	L.H. rear indicator	Clignotant AR G	Hint. Blinker, L.
	49	14 75 37 50	4	Coppetta per fanalino	Cap	Capuchon	Kappe
	50	14 75 34 50	2	Distanziale	Spacer	Entretoise	Distanzstück
	51	95 02 11 10	2	Rondella dentellata	Tooth washer	Rondelle dentée	Zahnscheibe
	52	17 75 05 20	1	Intermittenza	Intermittence	Centrale clignotants	Intermittenz
	53	17 75 12 00	1	Supporto elastico	Flexible support	Support élastique	Elast. Halter
	54	98 82 25 20	2	Vite fiss. proiettore	Screw	Vis	Schraube
	55	95 12 01 05	2	Rosetta elast. ondul.	Washer	Rondelle	Scheibe

* **Specificare la quantità in metri (1 m - 2 m - ecc.) - Indicate quantity required in meters (1 m - 2 m - etc.) Indiquer la quantité en mètres (1 m - 2 m - etc.) - Lieferbar in Meter (1 m - 2 m - etc.) bestellen**

DEUTSCHLAND AUSFUHRUNG - V35

TAVOLA - DRAWING TABLE - BILD 1
BASAMENTO E COPERCHI - CRANKCASE & COVERS
CARTER MOTEUR - COUVERCLES - KURBELGEH. - DECKEL

—	19 99 10 00	1	Motore compl. carbur.	Engine with carbur.	Moteur avec carbur.	Motor with Vergaser
—	19 99 14 00	1	Motore e cambio com.	Engine & transm. com.	Moteur et boîte à vit.	Motor und Schaltung

TAVOLA - DRAWING TABLE - BILD 2
TESTA E CILINDRO - HEAD AND CYLINDER
CULASSE ET CYLINDRE - KOPF UND ZYLINDER

1	19 02 21 00	1	Testa destra compl.	R.H. cylinder head, com.	Culasse D compl.	Zylinderkopf R. kpl.
2	19 02 22 00	1	Testa sinistra compl.	L.H. cylinder head. com.	Culasse G compl.	Zylinderkopf L. kpl.
26	19 11 50 00	1	Pipa aspirazione destra	R.H. manifold	Pipe D	Ansaugkrümmer, R.
27	19 11 50 01	1	Pipa aspirazione sinistra	L.H. manifold	Pipe G	Ansaugkrümmer, L.

TAVOLA - DRAWING TABLE - BILD 4
DISTRIBUZIONE - TIMING SYSTEM
DISTRIBUTION - STEUERUNG

1	19 03 60 00	2	Valvola aspirazione	Intake manifold	Soupape d'admission	Einlassventil
2	19 03 61 00	2	Valvola scarico	Exhaust valve	Soupape d'échapp.	Auslassventil

TAVOLA - DRAWING TABLE - BILD 5
ALIMENTAZIONE - SCARICO - FEEDING - EXHAUST
ALIMENTATION - ECHAPP. - ZUFUHRUNG - AUSPUFF

1	19 11 26 00	1	Carburat. dx VHB 20 F	R.H. carbur. VHB 20 F	Carbur. D VHB 20 F	Vergaser R. VHB 20 F
2	19 11 26 01	1	Carbur. sx VHB 20 F	L.H. carbur. VHB 20 F	Carbur. G VHB 20 F	Vergaser L. VHB 20 F
72	61 93 49 40	1	Spillo conico	Needle	Pointeau conique	Kon. Nadel
90	39 93 57 01	1	Getto massimo	Main jet	Gicleur principal	Hauptduse

TAVOLA - DRAWING TABLE - BILD 7A
FRIZIONE - CLUTCH
EMBRAYAGE - KUPPLUNG

10	19 21 11 05	1	Ingran. rinvio A.P. (Z = 25)	O.S. intermediate gear (Z = 25)	Engren. de renvoi A.P. (Z = 25)	Zahnradvorgel, H.W. (Z = 25)

TAVOLA - DRAWING TABLE - BILD 8
SCATOLA CAMBIO - TRANSMISSION CASE
CARTER DE BOITE A VIT. - GETRIEBEGEHAUSE

—	19 99 15 00	1	Cambio completo e campana	Transmission assy and housing	Boîte à vitesse compl. et carter	Schaltgetriebe, kpl. und Gehäuse

TAVOLA - DRAWING TABLE - BILD 9
CAMBIO - TRANSMISSION
BOITE A VITESSES - SCHALTGETRIEBE

57	19 21 11 06	1	Ingranaggio rinvio A.P. (Z = 25)	Idle gear M.S. (Z = 25)	Pignon intermédiaire (Z = 25)	Zahnradvorgelege (Z = 25)

TAVOLA - DRAWING TABLE - BILD 12
TELAIO - FRAME
CHASSIS - RAHMEN

—	19 91 84 00	1	Targhetta identificaz.	Identification plate	Plaque d'identification	Schildchen
—	45 91 85 70	2	Rivetto	Rivet	Rivet	Niet

TAVOLA - DRAWING TABLE - BILD 17
STRUMENTAZ.-COMANDI - INSTR. PANEL - CONTROLS
TABL. DE BORD - COMM. - INSTRUMENTENBRETT - ANTR.

21	14 76 72 50	1	Contagiri	Rev. counter	Compte-tours	Drehzahlmesser
36	19 90 00 05	1	Libretto istruz. (D)	Rider's handbook (D)	Manuel d'entret. (D)	Betriebsanleitung (D)
38	14 76 98 50	1	Specchietto retrovisore	Driving mirror	Rétroviseur	Rückblickspiegel

Seimm Moto Guzzi S.p.A. - 22054 Mandello del Lario (Co) - Tel. 731112 - 732512 - Tx: 38095 - 6/78 - 2500 K

Printed in Italy

Dati indicativi soggetti a modifiche senza impegno di preavviso - All data are subject to modification without notice

- Scanzorosciate (Bg)

VERSIONE ESTERO • EXPORT VERSION • VERSION EXPORT • AUSLAND AUSFUHRUNG • EXPORT UITVOERING • VERSIONE ESTERO • EXPORT VERSION • VERSION EXPORT

www.guzzitek.org - Revente Interdite - Revendita Vietata - Resaling Forbiden - Wiederverkauf Verboten

USA VERSION - V50

TAVOLA - DRAWING TABLE - BILD 17

STRUMENTAZIONE - COMANDI - INSTR. PANEL - CONTROLS
TABL. DE BORD - COMM. - INSTRUMENTENBRETT. - ANTR.

18	19 76 16 00	1	Tachimetro contamiglia	Speedometer miles-ind.	Tachym. Compt.miles	Tachometer-Milen-Zähl.
25	19 76 91 20	1	Supporto con gemme	Support with name	Support avec emblème	Halter mit Schild

TAVOLA - DRAWING TABLE - BILD 19

ILLUMINAZIONE - LIGHTING
SIGNALS LUMINEUX - BELEUCHTUNG

1	14 74 05 81	1	Faro anteriore	Headlight	Projecteur AV	Vord. Scheinwerfer
—	39 74 03 02	1	Vite fiss. ghiera	Screw	Vis	Schraube
3	39 74 04 02	1	Ghiera	Ring nut	Embout	Haltering
—	17 74 03 60	1	Vite regolazione	Adjusting screw	Vis de réglage	Einstellschraube
-	17 74 03 65	1	Molla di regolazione	Spring	Ressort	Feder
—	17 74 03 62	1	Nottolino	Pawl	Rochet	Sperrklinke
—	39 74 03 06	1	Perno di regolazione	Pin	Goujon	Stift
—	17 74 03 63	1	Anello benzing	Ring	Bague	Ring
4	14 74 04 83	1	Gruppo ottico con lampada 12V - 40/45W	Head lamp with lamp lamp 12V - 40/45W	Optique de phare avec lampe 12V - 40/45W	Scheinwerfer Einsatz mit Lampe 12V - 40/45W
—	39 74 05 30	6	Molla di contrasto	Spring	Ressort	Feder
9	98 82 25 20	2	Bullone fiss. proiett.	Bolt	Boulon	Bolzen
10	95 12 01 05	2	Rosetta elastica	Spring washer	Rondelle élastique	Federscheibe
—	17 74 03 66	1	Vite autofil. fiss. capp.	Screw	Vis	Schraube
—	17 74 04 67	1	Cappuccio	Cap	Capuchon	Kappe
42	14 75 06 80	1	Indicat. anter. destro	R.H. front indicator	Clignotant AV D	Vord. Blinker, R.
43	14 75 06 81	1	Indicat. anter. sinistro	L.H. front indicator	Clignotant AV G	Vord. Blinker, L.
47	19 75 16 70	1	Indicat. poster. destro	R.H. rear indicator	Clignotant AR D	Hint. Blinker, R.
48	19 75 16 71	1	Indicat. poster. sinistro	L.H. rear indicator	Clignotant AR G	Hint. Blinker, L.
49	14 75 37 80	4	Coppetta per indicatori	Cap	Capuchon	Kappe

NEDERLANDSE UITVOERING - V50

TAVOLA - DRAWING TABLE - BILD 5

ALIMENTAZIONE - SCARICO - FEEDING - EXHAUST
ALIMENTATION - ECHAPP. - ZUFUHRUNG - AUSPUFF

34	19 12 07 60	1	Tubo scarico dx	R.H. exhaust pipe	Tuyau d'échapp. D	Auspuffrohr R.
35	19 12 07 61	1	Tubo scarico sx	L.H. exhaust pipe	Tuyau d'échapp. G	Auspuffrohr L.

Seimm Moto Guzzi S.p.A. - 22054 Mandello del Lario (Co) - Tel. 731112 - 732512 - Tx: 38095 - 6/78 - 2500 K Printed in Italy

Dati indicativi soggetti a modifiche senza impegno di preavviso - All data are subject to modification without notice - Scanzorosciate (Bg)

www.guzzitek.org - Revente Interdite - Revendita Vietata - Resaling Forbiden - Wiederverkauf Verboten

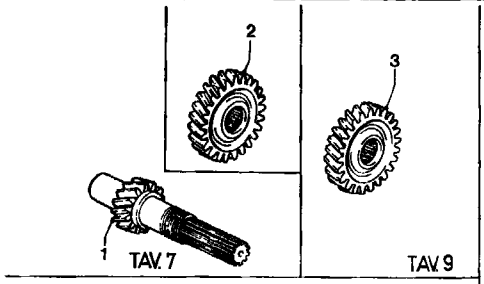

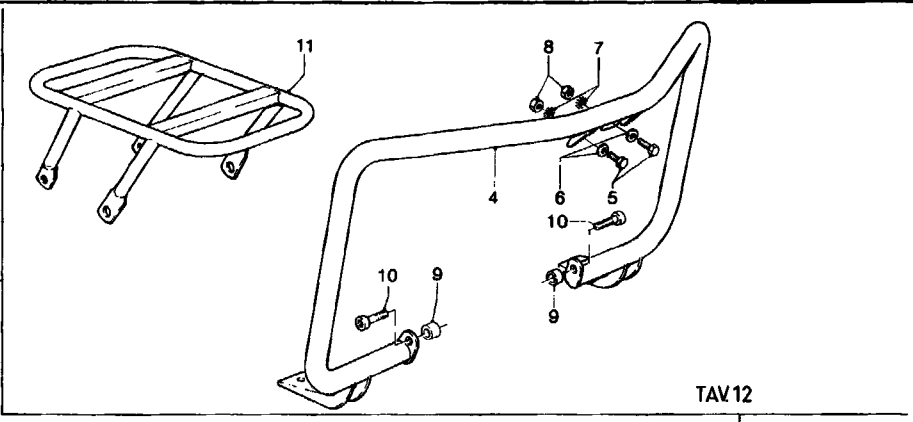

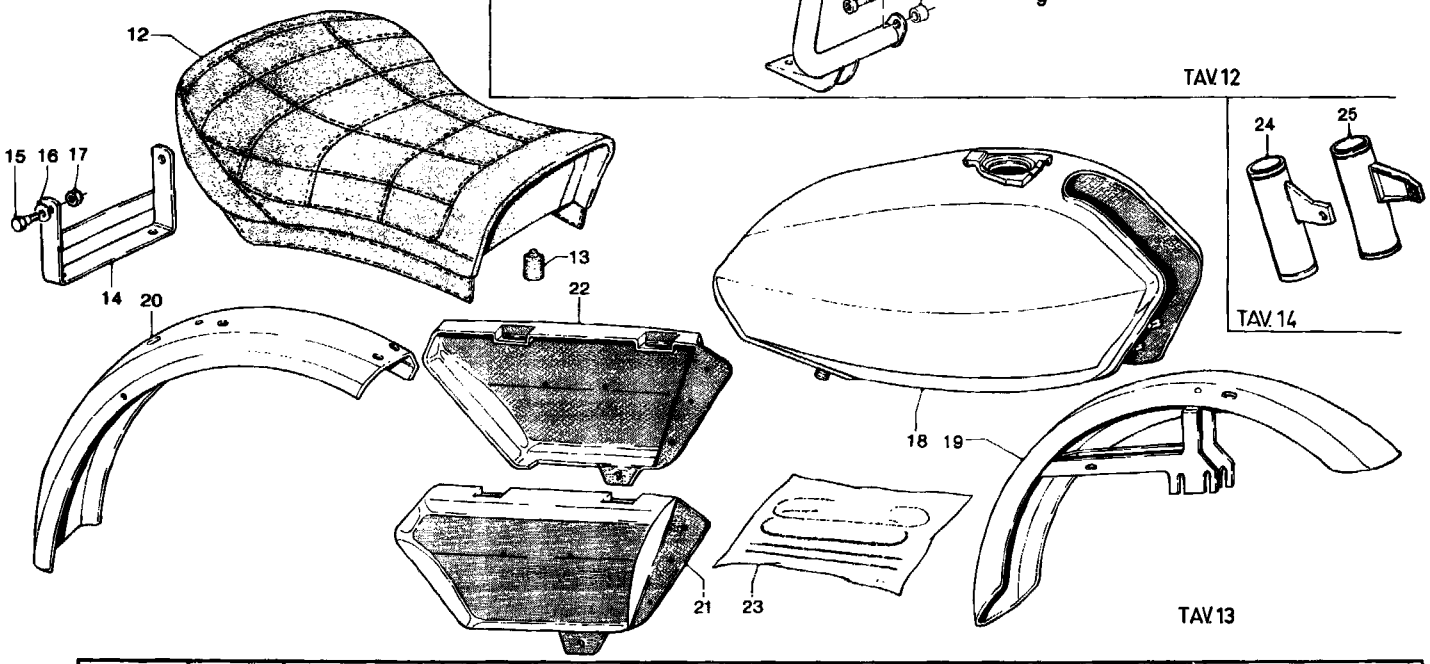

NOTE NOTES NOTES MARKE	POS. N.	N. COD. CODE No. No. CODE CODE Nr.	Q.tà Q.ty Q.té M.ge	DENOMINAZIONE	DESCRIPTION	DESIGNATION	BEZEICHNUNG
TAVOLA 1							
—		19 99 14 11	1	Motore e cambio V35	Engine & transm. V35	Mot e boîte vit. V35	Motor u. Schaltgetr. V35
—		19 99 14 90	1	Motore e cambio V50	Engine & transm. V50	Mot. et boîte vit. V50	Motor u. Schaltgetr. V50
—		19 99 15 00	1	Cambio V35	Transmission - V35	Boîte à vitesses V35	Schaltgetriebe - V35
—		19 99 15 10	1	Cambio V50	Transmission - V50	Boîte à vitesses V50	Schaltgetriebe - V50
TAVOLA 7							
(vale solo per modello V50 - for V50 model only - seulement pour modèle V50 - nur für V50 Modell)							
	1	19 21 07 00	1	Albero rinvio (Z = 13)	Countershaft (Z = 13)	Arbre intérm. (Z = 13)	Vorgelegewelle (Z = 13)
(avviamento a pedale - starter control lever - levier commande démarrage - Starterhebel)							
	2	19 21 11 05	1	Ingran. rinvio A.P. (V35 Z = 25)	O.S. intermediate gear (V35 = 25)	Engren. de renvoi A.P. (V35 = 25)	Zahnradvorgel. H.W. (V35 = 25)
	2	19 21 11 00	1	Ingran. rinvio A.P. (V50 Z = 24)	O.S. intermediate gear (V50 Z = 24)	Engren. de renvoi A.P. (V50 Z = 24)	Zahnradvorgel. H.W. (V50 Z = 24)
TAVOLA 9							
(vale solo per modello V50 - for V50 model only - seulement pour modèle V50 - nur für V50 Modell)							
	3	19 21 11 01	1	Ingran. rinvio A.P. (Z = 24)	O.S. intermediate gear (Z = 24)	Engren. de renvoi A.P. (Z = 24)	Zahnradvorgel. H.W. (Z = 24)

Seimm Moto Guzzi S.p.A. - 22054 Mandello del Lario (Co) - Tel. 731112 - 732512 - Tx: 38095 - 6/78 - 2500 K Printed in Italy

Dati indicativi soggetti a modifiche senza impegno di preavviso - All data are subject to modification without notice - Scanzorosciate (Bg)

www.guzzitek.org - Revente Interdite - Revendita Vietata - Resaling Forbiden - Wiederverkauf Verboten

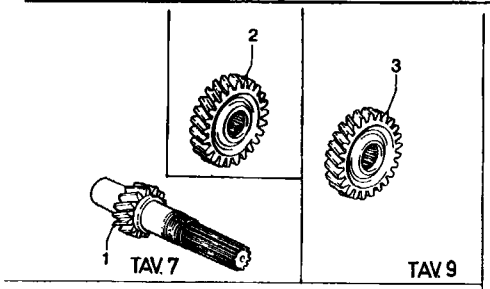

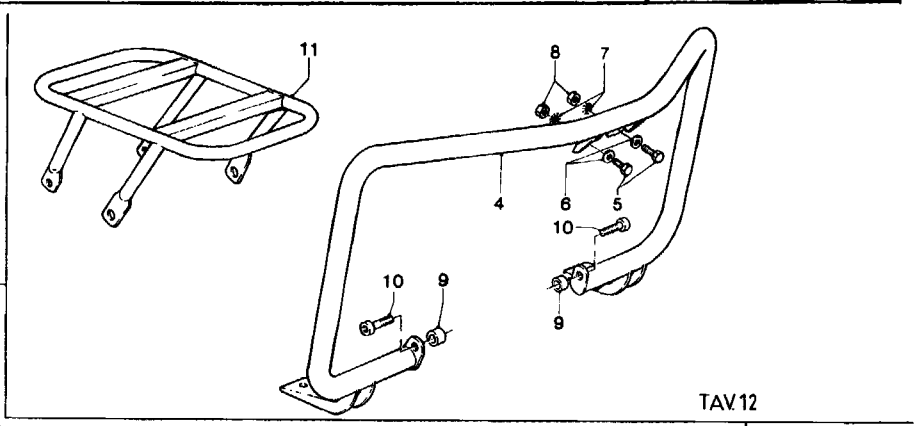

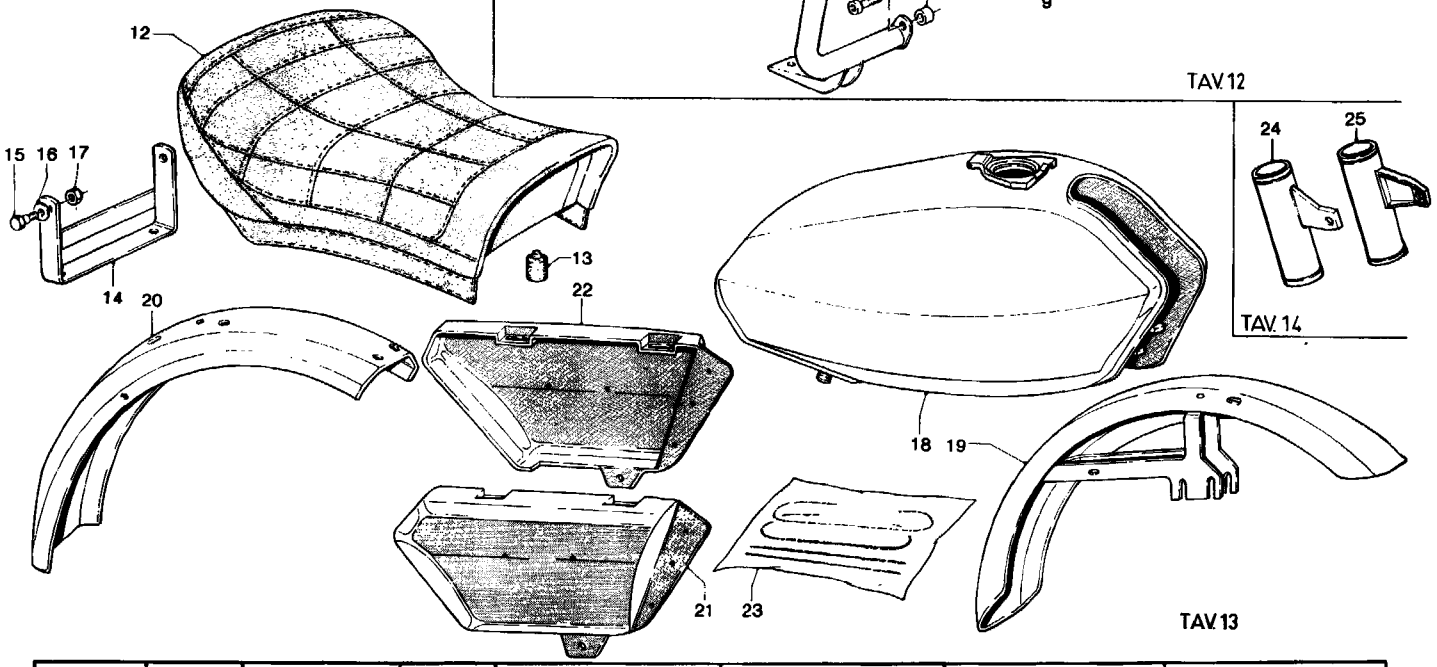

NOTE NOTES NOTES MARKE	POS. N.	N. COD. CODE No. No. CODE CODE Nr.	Q.tà Q.ty Q.té M.ge	DENOMINAZIONE	DESCRIPTION	DESIGNATION	BEZEICHNUNG
TAVOLA 12							
	4	19 45 02 90	1	Paraurti ant. compl.	Front bar, compl.	Pare-choc AV compl.	Vord. Stossstange, kpl.
	5	98 05 44 20	2	Vite sup. fiss. paraurti	Screw	Vis	Schraube
	6	95 00 42 08	2	Ranella piana	Washer	Rondelle	Scheibe
	7	95 02 11 08	2	Ranella dentellata	Washer	Rondelle	Scheibe
	8	92 60 22 08	2	Dado	Nut	Ecrou	Mutter
	9	91 18 11 12	2	Distanziale per paraurti	Spacer	Entretoise	Distanzstück
	10	98 62 05 40	2	Vite inf. fiss. paraurti	Screw	Vis	Schraube
	11	19 46 65 90	1	Portapacchi compl.	Carrier, compl.	Porte-bagages, compl.	Gepackhalter, kpl.
TAVOLA 13							
	12	19 46 05 90	1	Sella monoposto	Saddle	Selle	Sattel
	13	19 46 16 90	2	Tampone per sella	Rubber ring	Disque en caoutchouc	Gummiring
	14	19 46 23 90	1	Cavallotto fiss. sella	U-bolt	Etrier	Schelle
	15	98 05 44 20	2	Vite fiss. sella	Screw	Vis	Schraube
	16	61 27 03 00	2	Ranella per vite	Washer	Rondelle	Scheibe
	17	92 63 01 08	2	Dado per vite	Nut	Ecrou	Mutter
	18	19 10 02 93	1	Serbatoio (nero)	Fuel tank (black)	Réservoir (noir)	Behälter (schwarz)
	18	19 10 02 97	1	Serbatoio (bleu Roma)	Fuel tank (blue Roma)	Réservoir (bleu Roma)	Behälter (blau Roma)
	19	19 43 43 93	1	Parafango anter. (bianco) in lamiera	Front fender (white) (sheet)	Aile AV (blanc) en tôle	Vord. Kotflügel (weiss) (Blech)
	19	19 43 44 93	1	Parafango anter. (bianco) in plastica	Front fender (white) (plastic)	Aile AV (blanc) en plastique	Vord. Kotflügel (weiss) (plastisch)
	20	19 43 70 93	1	Parafango post. (bianco)	Rear fender (white)	Aile AR (blanc)	Hint. Kotflügel (weiss)
	21	19 47 62 93	1	Coperchio dx (nero)	R.H. cover (black)	Couvercle D (noir)	Deckel, R. (schwarz)
	21	19 47 62 97	1	Coperchio dx (bleu Roma)	R.H. cover (blue Roma)	Couvercle D (bleu Roma)	Deckel, R. (blau Roma)
	22	19 47 63 93	1	Coperchio sx (nero)	L.H. cover (black)	Couvercle G (noir)	Deckel, L. (schwarz)
	22	19 47 63 97	1	Coperchio sx (bleu Roma)	L.H. cover (blue Roma)	Couvercle G (bleu Roma)	Deckel, L. (blau Roma)
	23	19 92 33 90	1	Serie decalcomanie	Decal set	Jeu de décalcom.	Abziehbildsatz
	—	00 95 00 21	1	Kg. 1 vernice (nero)	Kg. 1 paint (black)	Kg. 1 vernis (noir)	Kg. 1 Lack (schwarz)
	—	00 95 00 25	1	Kg. 1 vernice (bianca)	Kg. 1 paint (white)	Kg. 1 vernis (blanc)	Kg. 1 Lack (weiss)
	—	00 95 00 30	1	Kg. 1 vernice (bleu Roma)	Kg. 1 paint (blue Roma)	Kg. 1 vernis (bleu Roma)	Kg. 1 Lack (blau Roma)

Seimm Moto Guzzi S.p.A. - 22054 Mandello del Lario (Co) - Tel. 731112 - 732512 - Tx: 38095 - 6/78 - 2500 K Printed in Italy

Dati indicativi soggetti a modifiche senza impegno di preavviso - All data are subject to modification without notice - Scanzorosciate (Bg)

www.guzzitek.org - Revente Interdite - Revendita Vietata - Resaling Forbiden - Wiederverkauf Verboten

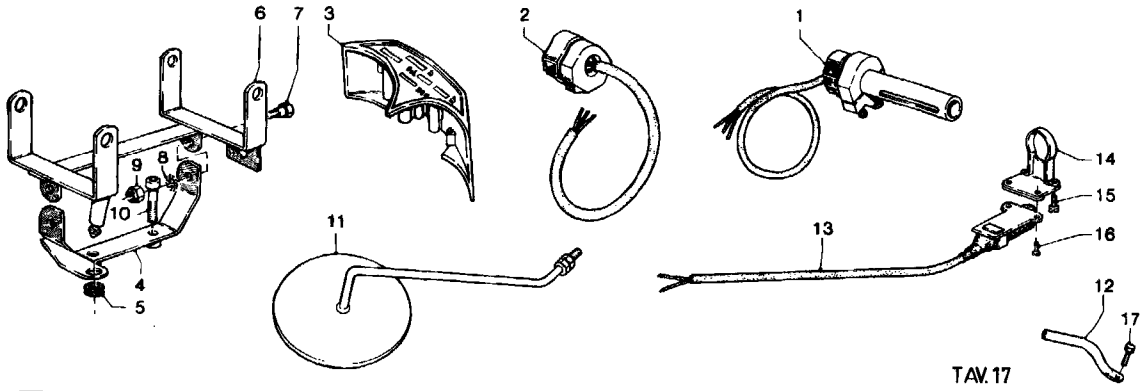

TAV. 17

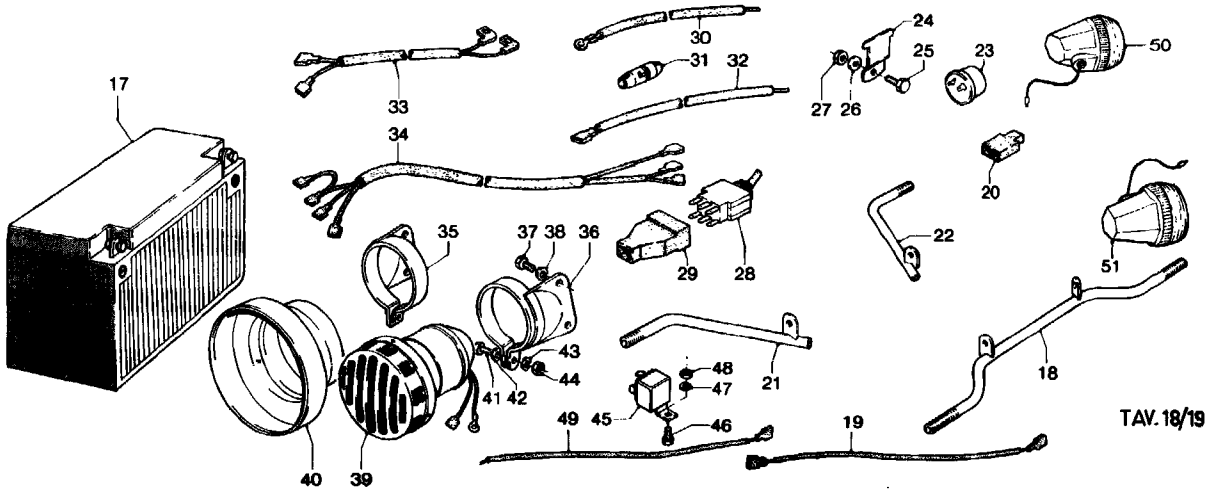

TAV. 18/19

NOTE NOTES NOTES MARKE	POS. N.	N. COD. CODE No. No. CODE CODE Nr.	Q.tà Q.ty Q.té M.ge	DENOMINAZIONE	DESCRIPTION	DESIGNATION	BEZEICHNUNG
TAVOLA 14							
	24	19 49 61 93	1	Fodero dx per forcella (nero)	R.H. stay tube for fork (black)	Tuyau étai D (noir)	Stützrohr, R. (schwarz)
	24	19 49 61 97	1	Fodero dx per forcella (bleu Roma)	R.H. stay tube (blue Roma)	Tuyau étai D (bleu Roma)	Stützrohr, R. (blau Roma)
	25	19 49 62 93	1	Fodero sx per forcella (nero)	L.H. stay tube (black)	Tuyau étai G (noir)	Stützrohr, L. (schwarz)
	25	19 49 62 97	1	Fodero sx per forcella (bleu Roma)	L.H. stay tube (blue Roma)	Tuyau étai G (bleu Roma)	Stützrohr, L. (blau Roma)
TAVOLA 17							
	1	65 60 34 20	1	Impugnatura com. gas	Throttle control	Commande de gaz	Gasregelung
	2	65 73 80 20	1	Dispos. ind. avvis.	Horn control	Dispos. comm. avv. ac.	Hupevorrichtung
	3	19 76 69 00	1	Supporto gemme	Name support	Support emblème	Schildhalter
	4	19 50 23 90	1	Supporto telec. fisso	Support	Support	Halter
	5	91 55 10 85	1	Gommino	Rubber	Caoutchouc	Gummistück
	6	19 50 28 90	1	Supp. telecom. mobile	Support	Support	Halter
	7	98 05 43 16	2	Vite per fulcro	Screw	Vis	Schraube
	8	95 02 11 06	2	Ranella dentellata	Washer	Rondelle	Scheibe
	9	92 63 01 06	2	Dado autobloccante	Self-locking nut	Ecrou à autoblocage	Hutmutter
	10	98 83 04 45	2	Vite fiss. telecom.	Screw	Vis	Schraube
	11	14 76 98 50	1	Specchio retrovisivo	Driving mirror	Rétroviseur	Rückblickspiegel
	12	17 50 26 45	1	Attacco microtelefono	Support	Support	Halter
	13	19 75 63 90	1	Pulsante teleruttore	Push-button, compl.	Poussoir, compl.	Knopf, kpl.
	14	18 50 40 80	1	Supporto pulsante	Support	Support	Stütze
	15	98 20 03 12	2	Vite fiss. supporto	Screw	Vis	Schraube
	16	98 20 03 06	2	Vite fiss. puls. supp.	Screw	Vis	Schraube
	17	98 07 43 16	1	Vite fiss. att. microtelef.	Screw	Vis	Schraube

Seimm Moto Guzzi S.p.A. - 22054 Mandello del Lario (Co) - Tel. 731112 - 732512 - Tx: 38095 - 6/78 - 2500 K Printed in Italy

Dati indicativi soggetti a modifiche senza impegno di preavviso - All data are subject to modification without notice - Scanzorosciate (Bg)

www.guzzitek.org - Revente Interdite - Revendita Vietata - Resaling Forbiden - Wiederverkauf Verboten

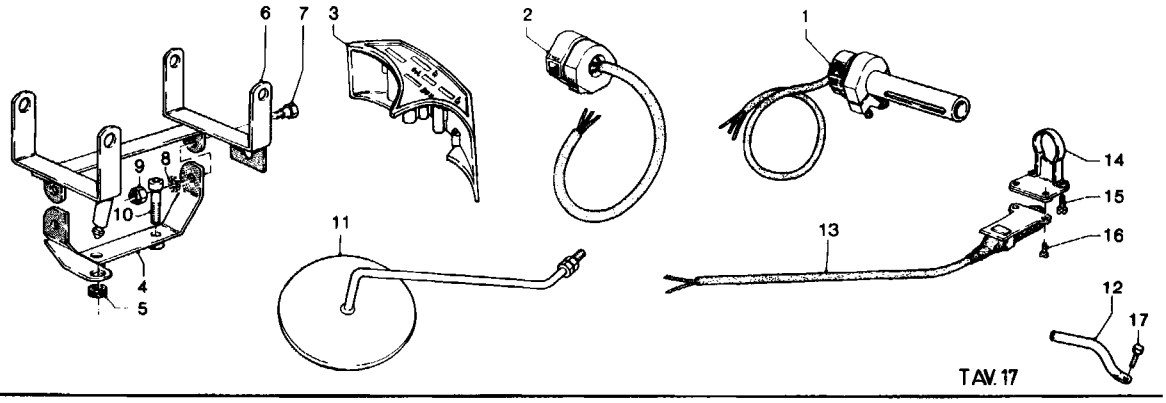

TAV. 17

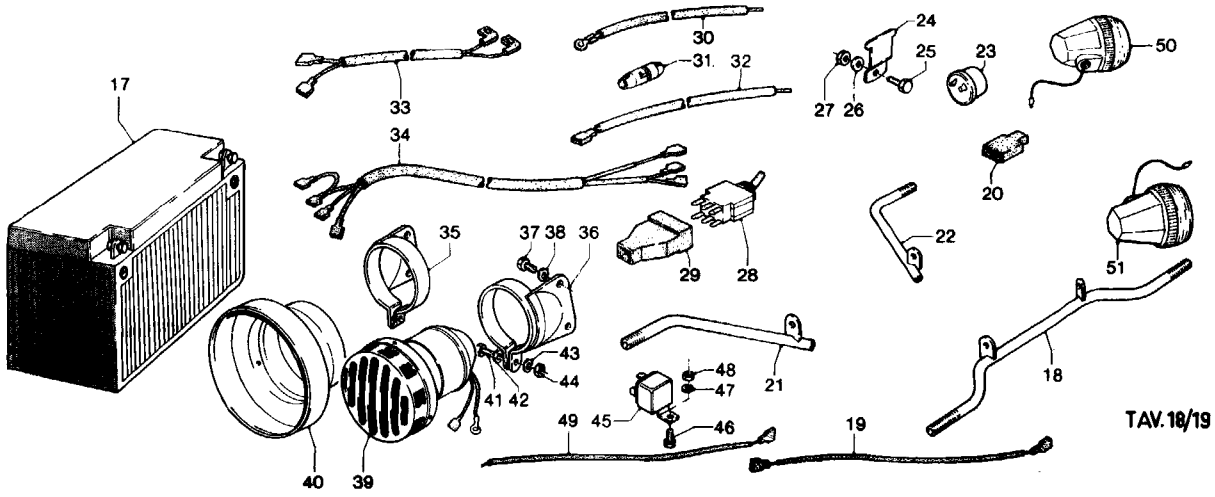

TAV. 18/19

NOTE NOTES NOTES MARKE	POS. N.	N. COD. CODE No. No. CODE CODE Nr.	Q.tà Q.ty Q.té M.ge	DENOMINAZIONE	DESCRIPTION	DESIGNATION	BEZEICHNUNG
	TAVOLA 18/19						
	17	14 70 45 05	1	Accumulat. 12V - 32Ah	Battery 12V - 32Ah	Batterie 12V - 32Ah	Batterie 12V - 32Ah
	18	19 75 13 90	1	Supporto ant. indic.	Support	Support	Stütze
	19	19 74 83 00	1	Cavo cont. 30/85 teler.	Cable	Câble	Kabel
	20	93 40 09 63	2	Innesto a 3 vie	Joint	Connexion	Anschluss
	21	19 75 85 90	1	Braccio destro	R.H. support	Support D	Stütze, R.
	22	19 75 85 91	1	Braccio sinistro	L.H. support	Support G	Stütze, L.
	23	17 75 05 20	2	Intermittenza	Intermittence	Centrale clignotant	Intermittenz
	24	17 75 04 00	1	Squadretta	Support	Equerre	Abstützwinkel
	25	98 05 43 14	1	Vite	Screw	Vis	Schraube
	26	95 00 02 06	2	Ranella piana	Washer	Rondelle	Scheibe
	27	92 60 22 06	1	Dado per vite	Nut	Ecrou	Mutter
	28	13 74 57 40	1	Commutatore ins. lamp.	Selector switch	Commutateur	Reglerschalter
	29	17 75 60 00	1	Cappuccio di protez.	Cap	Capuchon	Kappe
	30	18 75 71 81	2	Cavo da batt. a fusib.	Cable	Câble	Kabel
	31	13 74 25 40	2	Conten. compl. fusib.	Container, compl.	Container compl.	Behälter, kpl.
	32	19 75 71 90	1	Cavo da fus. a interm.	Cable	Câble	Kabel
	33	18 72 01 50	1	Gruppo cavi coll. int.	Cable set	Fils	Leitung
	34	19 75 31 90	1	Gruppo cavi ins. lamp.	Cable set	Fils	Leitung
	35	19 74 42 90	1	Supporto sirena dx	R.H. siren support	Support sirène D	Stütze für Sirene, R.
	36	19 74 42 91	1	Supporto sirena sx	L.H. siren support	Support sirène G	Stütze für Sirene, L.
	37	98 05 44 16	4	Vite fiss. supporti	Screw	Vis	Schraube
	38	95 02 11 08	4	Ranella elastica	Spring washer	Rondelle élastique	Federscheibe
28743745	39	~~19 74 37 90~~	2	Elettrosirena	Electric siren	Sirène électrique	Elektr. Sirene
	40	19 74 37 91	2	Megafono elettrosirena	Megaphone	Mégaphone	Megaphon
	41	98 05 43 22	2	Vite fiss. sirene	Screw	Vis	Schraube
	42	95 00 02 06	2	Ranella	Washer	Rondelle	Scheibe
	43	95 02 11 06	2	Ranella elastica	Spring washer	Rondelle élastique	Federscheibe
	44	92 60 22 06	2	Dado	Nut	Ecrou	Mutter
	45	19 73 25 00	2	Teleruttore sirene	Siren conn. switch	Télérupteur sirènes	Sirenfernschalter
	46	98 05 42 10	1	Vite	Screw	Vis	Schraube
	47	95 12 91 00	1	Ranella	Washer	Rondelle	Scheibe
	48	92 60 22 05	1	Dado	Nut	Ecrou	Mutter
	49	18 75 71 80	1	Cavo da fus. a teler.	Cable	Câble	Kabel
	50	14 75 06 51	1	Indicat. post. dx	R.H. rear indicator	Clignotant AR D	Hint. Blinker, R.
	51	14 75 06 50	1	Indicatore post. sx	L.H. rear indicator	Clignotant AR G	Hint. Blinker, L.

Seimm Moto Guzzi S.p.A. - 22054 Mandello del Lario (Co) - Tel. 731112 - 732512 - Tx: 38095 - 6/78 - 2500 K Printed in Italy

Dati indicativi soggetti a modifiche senza impegno di preavviso - All data are subject to modification without notice - Scanzorosciate (Bg)

www.guzzitek.org - Revente Interdite - Revendita Vietata - Resaling Forbiden - Wiederverkauf Verboten

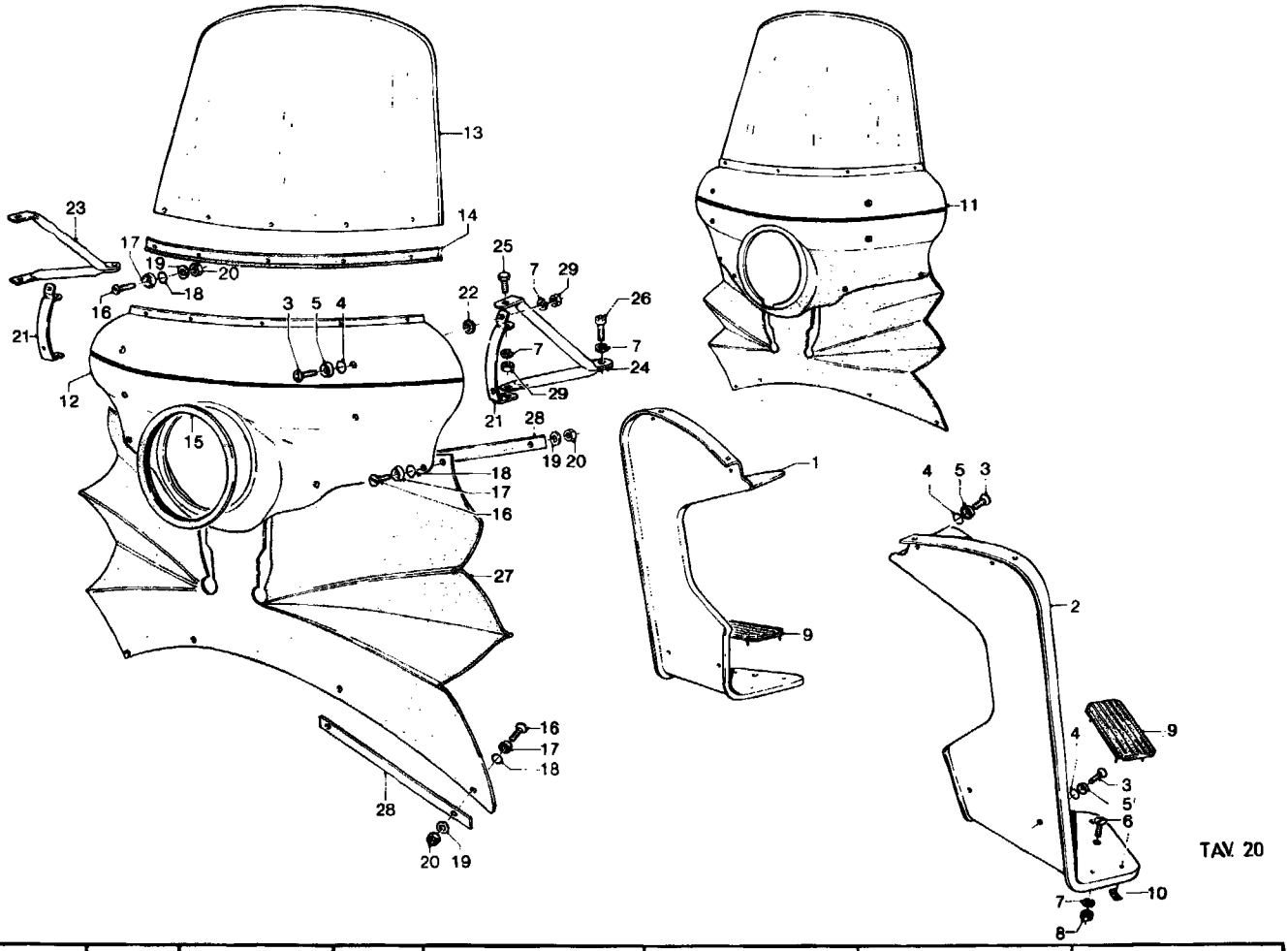

TAV. 20

NOTE NOTES NOTES MARKE	POS. N.	N. COD. CODE No. No. CODE CODE Nr.	Q.tà Q.ty Q.té M.ge	DENOMINAZIONE	DESCRIPTION	DESIGNATION	BEZEICHNUNG
TAVOLA 20							
	1	19 45 33 90	1	Pedana paragambe dx	R.H. leg shield	Protection jambes D	Beinschutz, R.
	2	19 45 61 90	1	Pedana paragambe sx	L.H. leg shield	Protection jambes G	Beinschutz, L.
	3	98 26 06 21	12	Vite supp. fiss. pedana	Screw	Vis	Schraube
	4	45 21 24 00	12	Anello gomma	Rubber ring	Anneau en caoutchouc.	Gummiring
	5	18 57 78 50	12	Ranella esterna	Washer	Rondelle	Scheibe
	6	98 32 60 13	2	Vite inf. fiss. pedana	Screw	Vis	Schraube
	7	95 02 11 06	12	Ranella elastica	Spring washer	Rondelle élastique	Federscheibe
	8	92 60 22 06	2	Dado	Nut	Ecrou	Mutter
	9	19 45 29 91	2	Tappetino	Rubber mat	Tapis	Teppich
	10	39 92 22 00	8	Fermaglio tappetino	Clip	Etrier	Bügel
	11	19 57 53 93	1	Carenatura con parabrezza (nera)	Fairing, compl. (black)	Carénage, compl. (noir)	Ausrundung, kpl. (schwarz)
	11	19 57 53 97	1	Carenatura con parabrezza (bleu Roma)	Fairing, compl. (blue Roma)	Carénage, compl. (bleu Roma)	Ausrundung, kpl. (blau Roma)
	12	19 57 54 93	1	Carenatura nuda (nero)	Fairing (black)	Carénage (noir)	Ausrundung (schwarz)
	12	19 57 54 97	1	Caren. nuda (bleu Roma)	Fairing (blue Roma)	Carénage (bleu Roma)	Ausrundung (blau Roma)
	13	19 57 72 90	1	Parabrezza nudo	Windshield	Pare-brise	Windschutzscheibe
	14	19 57 79 90	1	Guarnizione	Gasket	Joint	Dichtung
	15	19 57 89 90	1	Guarnizione faro	Gasket	Joint	Dichtung
	16	98 26 04 18	13	Vite	Screw	Vis	Schraube
	17	14 57 78 50	13	Ranella	Washer	Rondelle	Scheibe
	18	90 70 60 35	13	Anello gomma	Rubber ring	Anneau en caoutch.	Gummiring
	19	95 00 72 04	13	Ranella	Washer	Rondelle	Scheibe
	20	92 60 10 04	13	Dado	Nut	Ecrou	Mutter
	21	19 57 55 90	2	Cavallotto fiss. caren.	U-bolt	Etrier	Bügelschraube
	22	93 11 00 60	4	Distanziale gomma	Rubber spacer	Entretoise en caoutch.	Gummiring
	23	19 57 86 90	1	Supporto destro	R.H. support	Support D	Stütze, R.
	24	19 57 86 91	1	Supporto sinistro	L.H. support	Support G	Stütze, L.
	25	98 07 43 14	4	Vite fiss. supporto	Screw	Vis	Schraube
	26	98 05 23 26	2	Vite fiss. supporto	Screw	Vis	Schraube
	27	19 57 73 90	1	Grembiale per caren.	Apron	Tablier	Windschutz
	28	19 57 75 90	4	Piastrina fiss. gremb.	Plate	Plaque	Platte
	29	92 60 12 06	8	Dado	Nut	Ecrou	Mutter

Seimm Moto Guzzi S.p.A. - 22054 Mandello del Lario (Co) - Tel. 731112 - 732512 - Tx: 38095 - 6/78 - 2500 K Printed in Italy

Dati indicativi soggetti a modifiche senza impegno di preavviso - All data are subject to modification without notice

- Scanzorosciate (Bg)

www.guzzitek.org - Revente Interdite - Revendita Vietata - Resaling Forbiden - Wiederverkauf Verboten

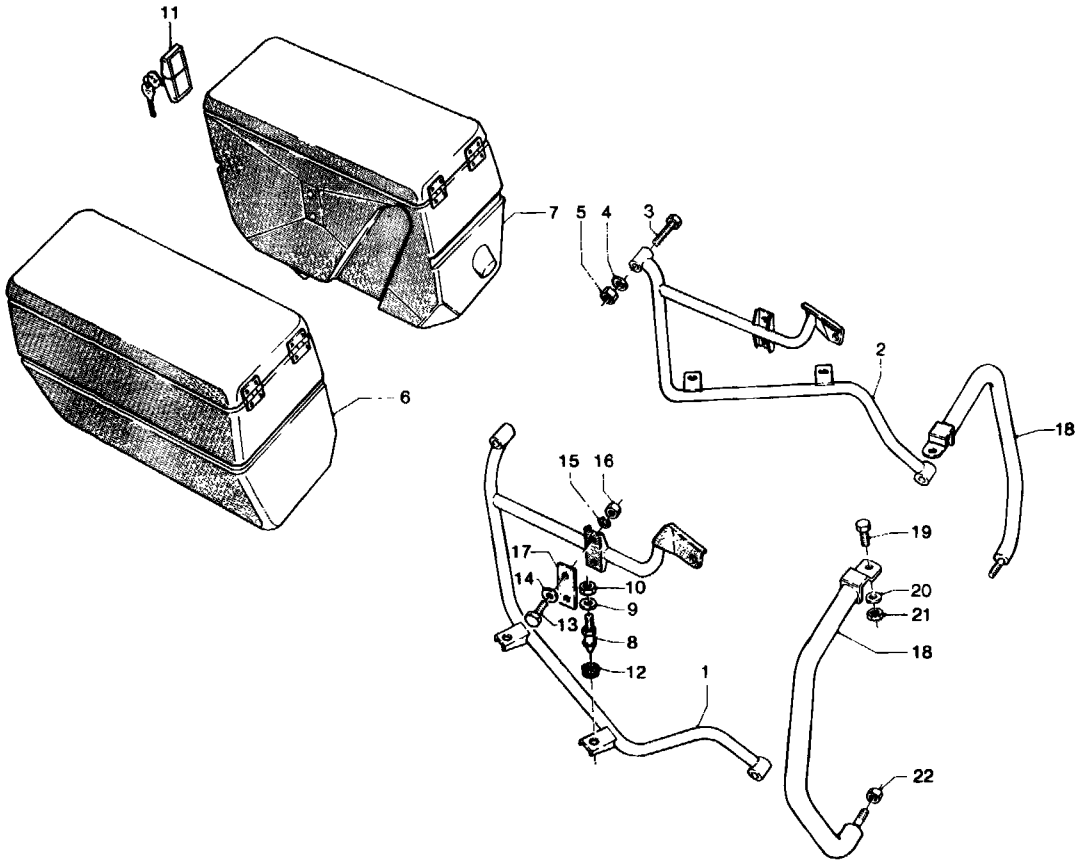

TAV. 21

NOTE NOTES NOTES MARKE	POS. N.	N. COD. CODE No. No. CODE CODE Nr.	Q.tà Q.ty Q.té M.ge	DENOMINAZIONE	DESCRIPTION	DESIGNATION	BEZEICHNUNG
TAVOLA 21							
	1	19 48 50 90	1	Portaborse dx compl.	R.H. bag holder	Porte-sac D	Taschetrager, R.
	2	19 48 65 90	1	Portaborse sx compl.	L.H. bag holder	Porte-sac G	Tascheträger, L.
	3	98 05 25 55	2	Vite fiss. portaborse	Screw	Vis	Schraube
	4	95 02 11 10	2	Ranella per vite	Washer	Rondelle	Scheibe
	5	92 60 22 10	2	Dado per vite	Nut	Ecrou	Mutter
	6	19 48 25 93	1	Borsa later. dx (nera)	R.H. side bag (black)	Sac D (noir)	Tasche, R. (schwarz)
	6	19 48 25 97	1	Borsa lat. dx (bleu Roma)	R.H. side bag (blue Roma)	Sac D (bleu Roma)	Tasche, R. (blau Roma)
	7	19 48 57 93	1	Borsa later. sx (nera)	L.H. side bag (black)	Sac G (noir)	Tasche, L. (schwarz)
	7	19 48 57 97	1	Borsa lat. sx (bleu Roma)	L.H. side bag (blue Roma)	Sac G (bleu Roma)	Tasche, L. (blau Rome)
	8	19 48 69 90	4	Colonn. fiss. borse	Stud bolt	Goujon	Stiftschraube
	9	95 10 01 41	4	Ranella piana	Washer	Rondelle	Scheibe
	10	92 60 22 06	4	Dado	Nut	Ecrou	Mutter
	11	19 48 40 90	2	Serratura per borsa d/s con chiavi	R.H. & L.H. bag lock with keys	Serrure pour sac D/G avec clés	Tasche R. u L. Schloss mit Schlussel
	12	91 55 10 82	4	Gommino inferiore	Rubber	Caoutchouc	Gummistück
	13	98 05 43 20	4	Vite fiss. borse	Screw	Vis	Schraube
	14	95 10 01 41	4	Ranella piana	Washer	Rondelle	Scheibe
	15	95 02 11 06	4	Ranella elastica	Spring washer	Rondelle élastique	Federscheibe
	16	92 60 22 06	4	Dado	Nut	Ecrou	Mutter
	17	10 48 82 00	4	Spessore gomma	Rubber spacer	Entretoise caoutch.	Gummidistanzstuck
	18	19 45 82 90	2	Paraurti poster.	Rear bar	Pare-choc AR	Hint. Stossstange
	19	98 05 44 20	2	Vite sup. fiss. paraurti	Screw	Vis	Schraube
	20	95 00 42 08	2	Ranella per vite	Washer	Rondelle	Scheibe
	21	92 60 22 08	2	Dado per vite	Nut	Ecrou	Mutter
	22	92 63 05 10	2	Dado inferiore	Nut	Ecrou	Mutter

Seimm Moto Guzzi S.p.A. - 22054 Mandello del Lario (Co) - Tel. 731112 - 732512 - Tx: 38095 - 6/78 - 2500 K Printed in Italy

Dati indicativi soggetti a modifiche senza impegno di preavviso - All data are subject to modification without notice - Scanzorosciate (Bg)

www.guzzitek.org - Revente Interdite - Revendita Vietata - Resaling Forbiden - Wiederverkauf Verboten

PIAGGIO &C.s.p.a.

MOTO GUZZI

SPARE PARTS CATALOGUE



V 35 - V 50 Acc. Elettronica 350-500 1977-1980

Chassis prefix: ZGUPA350

Engine prefix:

Index

Products....3
Part reference....4
CHASSIS....9
Drawing 33.01 - Carrosserie....9
Drawing 33.02 - Couple conique....11
Drawing 33.03 - Phares-klaxon....13
Drawing 33.04 - Fourche arriere....15
Drawing 33.05 - Circuit electrique....16
Drawing 33.06 - Sys.frein avant/arrière....19
Drawing 33.07 - Guidon - Commandes....22
Drawing 33.08 - Roues....24
Drawing 33.09 - Suspension avant/arriere....25
Drawing 33.10 - Chassis....27
Drawing 33.12 - Aspiration-échappement....30
MOTEUR....34
Drawing 34.11 - Arbre moteur....34
Drawing 34.13 - Boîte de vitesses....36
Drawing 34.14 - Carter moteur....39
Drawing 34.15 - Tête cylindre....41
Drawing 34.16 - Distribution....43
Drawing 34.17 - Embrayage....45
Drawing 34.18 - Démarreur Bendix....47
Drawing 34.19 - Pompe huile....48
Drawing 34.20 - Carter de boîte vitesses....50

Products

Code	Validity

no products

Code	Drawing Nr.	Pos.
GU00823947120	33.06	58
GU00823950050	33.06	56
GU01474630	33.01	27
GU10054100	34.13	12
GU10054100	34.13	60
GU10158201	34.19	17
GU10158701	34.19	18
GU10528900	33.02	11
GU10528900	33.02	9
GU10528900	34.14	22
GU10528900	34.20	23
GU10551600	33.09	47
GU10933700	33.12	91
GU10934400	33.12	88
GU10934900	33.12	84
GU12003702	34.14	30
GU12006400	34.19	25
GU12006400	34.19	28
GU12022600	33.02	6
GU12022600	34.20	24
GU12067701	33.02	19
GU12087001	34.17	10
GU12150700	34.19	21
GU12150900	34.19	19
GU12154200	33.09	30
GU12154200	34.14	33
GU12154200	34.19	33
GU12154200	34.20	12
GU12157800	34.19	31
GU12159000	34.19	23
GU12356400	33.02	20
GU12434001	33.10	11
GU12548201	33.04	10
GU12626800	34.13	45
GU12717600	33.03	38
GU12735100	33.03	30
GU12735100	33.06	59
GU12937200	33.12	70
GU12937300	33.12	56
GU13021900	34.15	12
GU13148300	34.19	7
GU13432640	33.10	10
GU13932800	33.12	66
GU13932900	33.12	67
GU13933100	33.12	86
GU13934600	33.12	28
GU13934600	33.12	82
GU13936200	33.12	62
GU13936300	33.12	63
GU13936600	33.12	64
GU13936700	33.12	65
GU13937000	33.12	52
GU13937800	33.12	61
GU13937900	33.12	57
GU14086000	34.17	9
GU14086100	34.17	11
GU14090201	34.17	13
GU14090400	34.17	14
GU14105100	33.01	4
GU14107100	33.10	58
GU14217901	34.17	31
GU14217901	34.20	7
GU14251001	33.06	34
GU14251001	34.13	55
GU14502250	33.07	13
GU14516600	33.09	10
GU14526407	33.09	20

Code	Drawing Nr.	Pos.
GU14547800	33.04	14
GU14609650	33.05	46
GU14609650	33.06	30
GU14609650	33.10	59
GU14609650	33.12	13
GU14615901	33.02	29
GU14615901	34.11	19
GU14616150	33.08	13
GU14634400	33.08	22
GU14657050	33.06	16
GU14658850	33.06	31
GU14659200	33.06	20
GU14661100	33.06	54
GU14661300	33.06	55
GU14704205	33.05	17
GU14705350	33.05	3
GU14707000	33.05	2
GU14707605	34.18	13
GU14717400	33.05	50
GU14717600	33.05	5
GU14730570	33.05	59
GU14730571	34.18	16
GU14731806	34.18	2
GU14740355	33.03	9
GU14740356	33.03	10
GU14743700	33.03	22
GU14748100	33.03	25
GU14750650	33.03	42
GU14750650	33.03	43
GU14750650	33.03	47
GU14750650	33.03	48
GU14753450	33.03	50
GU14753750	33.03	49
GU14768650	33.07	30
GU14768651	33.07	26
GU14769200	33.07	22
GU14917300	33.01	3
GU14931750	33.12	79
GU17113450	33.12	18
GU17113651	33.12	19
GU17114050	33.12	20
GU17114650	33.12	11
GU17517700	33.09	11
GU17657101	33.06	15
GU17659350	33.06	2
GU17659352	33.06	47
GU17659650	33.06	27
GU17704300	33.05	16
GU17712400	33.05	52
GU17719900	33.05	55
GU17736300	33.03	33
GU17736300	33.05	34
GU17740364	33.03	6
GU17740405	33.03	8
GU17742550	33.03	17
GU17750520	33.03	52
GU17751200	33.03	53
GU17755300	33.03	37
GU17755800	33.07	6
GU17755800	33.07	8
GU17756200	33.03	31
GU17756200	33.05	31
GU17762200	33.07	24
GU17767250	33.07	21
GU17767260	33.07	21
GU17768750	34.19	24
GU17937450	33.12	58

Code	Drawing Nr.	Pos.
GU18001650	34.14	24
GU18252050	33.10	70
GU18257551	33.06	41
GU18577850	33.07	16
GU19000100	34.14	1
GU19001200	34.14	15
GU19001400	34.14	14
GU19003400	34.14	26
GU19003502	34.14	19
GU19003600	34.14	20
GU19003800	34.14	8
GU19004900	34.14	28
GU19007700	33.05	41
GU19016301	34.14	10
GU19017000	33.10	43
GU19020800	34.15	24
GU19022000	34.15	19
GU19022050	34.15	19
GU19022100	34.15	1
GU19022110	34.15	1
GU19022150	34.15	1
GU19022200	34.15	2
GU19022210	34.15	2
GU19022250	34.15	2
GU19023501	34.15	9
GU19023700	34.15	10
GU19025300	34.15	6
GU19027500	34.16	15
GU19030500	34.16	7
GU19032000	34.16	10
GU19032300	34.16	11
GU19032300	34.17	41
GU19032900	34.16	14
GU19034000	34.16	8
GU19036000	34.16	1
GU19036010	34.16	1
GU19036050	34.16	1
GU19036100	34.16	2
GU19037820	34.15	8
GU19045001	34.16	26
GU19045861	34.16	25
GU19053301	34.16	16
GU19054500	34.16	17
GU19055700	34.16	23
GU19055800	34.19	26
GU19055900	34.19	27
GU19058000	34.16	19
GU19058400	34.16	20
GU19060101	34.15	17
GU19060151	34.15	17
GU19060400	34.11	10
GU19060400	34.11	15
GU19060450	34.11	10
GU19060450	34.11	15
GU19060600	34.11	16
GU19060650	34.11	16
GU19060700	34.11	11
GU19060750	34.11	11
GU19061000	34.11	12
GU19061050	34.11	12
GU19061235	34.11	13
GU19061250	34.11	13
GU19061500	34.11	3
GU19061810	34.11	26
GU19064100	34.11	1
GU19064150	34.11	1
GU19065400	34.11	2

Code	Drawing Nr.	Pos.
GU19066400	34.11	9
GU19066500	34.11	8
GU19067700	34.11	18
GU19067900	34.11	20
GU19080300	34.11	17
GU19082501	34.17	2
GU19083401	34.17	6
GU19084100	34.17	1
GU19093052	34.17	25
GU191002551	33.01	1
GU19102750	33.01	7
GU19103950	33.01	53
GU19105052	33.01	54
GU19105150	33.05	27
GU19112600	33.12	1
GU19112601	33.12	2
GU19112610	33.12	1
GU19112611	33.12	2
GU19112650	33.12	1
GU19112651	33.12	2
GU19113900	33.12	92
GU19114100	33.12	21
GU19114300	33.12	9
GU19114400	33.12	5
GU19115000	34.15	26
GU19115001	34.15	27
GU19115050	34.15	26
GU19115051	34.15	27
GU19115500	34.15	25
GU19117550	33.07	35
GU19120700	33.12	34
GU19120705	33.12	35
GU19121100	33.12	44
GU19122900	33.12	41
GU19123000	33.12	42
GU19133500	33.12	32
GU19134000	33.12	33
GU19146400	34.19	1
GU19147700	34.19	8
GU19147800	34.19	4
GU19148400	34.19	5
GU19148600	34.19	6
GU19149800	34.19	9
GU19152200	34.19	13
GU19153000	34.19	16
GU19155775	33.12	14
GU19156000	33.12	17
GU19156700	33.12	15
GU19156900	33.12	16
GU19159300	34.19	32
GU19159600	34.19	29
GU19200201	34.20	17
GU19200300	34.20	10
GU19200401	34.17	26
GU19200800	34.20	1
GU19201120	34.20	15
GU19202600	34.17	49
GU19203400	34.17	29
GU19204100	34.20	28
GU19206501	33.02	10
GU19206501	34.20	22
GU19207220	34.20	11
GU19210501	34.13	1
GU19210700	34.17	20
GU19210750	34.17	20
GU19211101	34.13	57
GU19211105	34.17	43

Code	Drawing Nr.	Pos.
GU19211106	34.13	57
GU19211150	34.17	43
GU19211151	34.13	57
GU19211300	34.13	8
GU19211400	34.13	6
GU19211800	34.13	5
GU19212000	34.13	2
GU19212900	34.13	15
GU19213600	34.13	14
GU19213700	34.13	17
GU19213700	34.17	22
GU19213800	34.20	5
GU19214001	34.13	24
GU19214501	34.13	20
GU19214600	34.13	7
GU19214800	34.13	21
GU19215100	34.13	22
GU19215200	34.13	23
GU19234400	34.13	30
GU19234600	34.13	31
GU19235220	34.13	36
GU19235800	34.20	8
GU19235900	34.17	48
GU19237800	34.20	13
GU19250900	34.13	54
GU19256900	34.13	51
GU19257800	34.13	44
GU19258220	34.13	41
GU19260400	34.17	34
GU19263300	34.17	46
GU19264000	34.17	37
GU19266200	34.17	45
GU19266601	34.17	44
GU19266700	34.13	58
GU19327601	33.04	5
GU19327701	33.04	2
GU19328001	33.04	7
GU19328801	33.04	3
GU19350220	33.04	1
GU19350322	33.02	1
GU19350421	33.02	13
GU19350700	33.02	22
GU19351100	33.02	4
GU19351401	33.02	16
GU19351900	33.02	2
GU19352300	33.02	23
GU19352401	33.02	31
GU19353500	33.02	24
GU19355100	33.02	34
GU19355200	33.02	35
GU19355202	33.02	36
GU19355300	33.02	33
GU19355300	34.13	32
GU19355302	33.02	33
GU19355305	33.02	33
GU19355400	33.02	21
GU19355402	33.02	21
GU19355404	33.02	21
GU19355406	33.02	21
GU19355408	33.02	21
GU19355410	33.02	21
GU19356700	33.02	39
GU19356700	34.17	24
GU19356801	33.02	37
GU19400100	33.10	1
GU19418200	33.10	21
GU19420300	33.10	5

Code	Drawing Nr.	Pos.
GU19422100	33.10	6
GU19430305	33.10	9
GU19432000	33.10	17
GU19433000	33.10	18
GU19434000	33.10	20
GU194343001	33.01	8
GU19436500	33.01	10
GU19436500	33.10	60
GU194370201	33.01	20
GU19438500	33.01	26
GU19438700	33.01	13
GU19439100	33.10	31
GU19460505	33.01	40
GU19461650	33.01	41
GU19462050	33.10	34
GU19464350	33.01	42
GU194762501	33.01	32
GU194763501	33.01	33
GU19478150	33.01	34
GU19478250	33.01	35
GU19478550	33.01	37
GU19478750	33.01	38
GU19490305	33.09	1
GU194961001	33.09	33
GU194962001	33.09	34
GU19500200	33.09	36
GU19501500	33.07	12
GU19504800	33.09	27
GU195225001	33.09	12
GU195226001	33.09	13
GU19526600	33.09	23
GU19540200	33.04	11
GU19547000	33.04	12
GU19548001	33.04	8
GU19548101	33.04	9
GU19552300	33.09	42
GU19555200	33.02	42
GU19555200	33.04	15
GU19605400	33.07	1
GU19605501	33.07	4
GU19610300	33.08	2
GU19614100	33.08	9
GU19625451	33.07	3
GU19630600	33.08	15
GU19632502	33.08	16
GU19633300	33.08	21
GU19634000	33.08	19
GU19634100	33.08	20
GU19635700	33.02	28
GU19636400	33.08	18
GU19657100	33.06	51
GU19658700	33.06	26
GU19659500	33.06	4
GU19659600	33.06	3
GU19659700	33.01	9
GU19662600	33.06	49
GU19663300	33.06	48
GU19665000	33.06	53
GU19667500	33.06	5
GU19667600	33.06	6
GU19668000	33.06	12
GU19675000	33.06	38
GU19677000	33.06	33
GU19704100	33.10	65
GU19704800	33.05	4
GU19705900	33.01	19
GU19705900	33.10	30

Code	Drawing Nr.	Pos.
GU19707100	33.05	45
GU19716801	33.10	52
GU19718000	34.15	31
GU19718600	33.05	6
GU19721000	34.11	24
GU19721400	33.05	11
GU19721500	33.05	30
GU19721700	33.05	29
GU19722100	33.05	28
GU19722200	33.05	33
GU19722500	33.05	56
GU19722600	33.05	35
GU19723000	33.03	28
GU19723100	33.03	27
GU19732400	33.03	29
GU19732500	33.03	39
GU19732500	33.05	12
GU19733200	34.18	10
GU19733350	33.05	47
GU19733800	34.18	8
GU19740200	33.03	4
GU19740454	33.03	3
GU19740458	33.03	2
GU19740900	33.03	11
GU19741000	33.01	46
GU19741200	33.01	47
GU19743000	33.03	15
GU19747100	33.03	23
GU19747200	33.03	26
GU19747300	33.03	24
GU19747400	33.05	38
GU19748000	33.05	43
GU19748200	33.05	42
GU19748300	33.05	44
GU19748400	33.05	65
GU19748400	34.18	17
GU19750800	33.03	41
GU19751300	33.03	40
GU19760400	33.07	19
GU19761500	33.07	18
GU19766900	33.07	25
GU19767200	33.07	21
GU19768100	33.07	23
GU19782520	33.10	4
GU19900002	33.07	36
GU19900003	33.07	36
GU19922000	33.01	39
GU19922051	33.01	39
GU19923300	33.01	2
GU19925000	33.01	50
GU19925100	33.01	51
GU19934600	33.12	80
GU19934900	33.12	72
GU19935500	33.12	77
GU19935700	33.12	90
GU19935750	33.12	90
GU19935900	33.12	78
GU19936000	33.12	75
GU19938880	33.12	54
GU19991550	34.20	31
GU19999001	34.14	35
GU19999051	34.14	35
GU19999501	34.14	34
GU20085720	34.17	8
GU20208520	34.13	40
GU20354621	33.02	18
GU20999520	34.13	38

Code	Drawing Nr.	Pos.
GU23036100	34.16	2
GU23133100	33.12	31
GU23653011	33.06	17
GU23999290	33.09	41
GU25656100	33.06	14
GU25741325	33.03	36
GU25937600	33.12	60
GU27084420	34.17	7
GU27654610	33.06	21
GU28238261	34.13	39
GU28704552	33.05	1
GU28740533	33.03	1
GU28929940	33.07	37
GU29703800	33.05	23
GU30600310	33.07	11
GU30730711	33.05	58
GU31652265	33.06	52
GU31652365	33.06	32
GU31654665	33.06	21
GU31654765	33.06	22
GU31659165	33.06	19
GU31659265	33.06	20
GU31666990	33.06	1
GU31666990	33.06	46
GU31716560	33.05	7
GU31717060	33.05	51
GU35214300	33.04	13
GU35755780	33.03	35
GU35755780	33.07	34
GU39103400	33.10	57
GU39215400	34.13	3
GU39231070	34.13	35
GU39231270	34.13	34
GU39238100	34.13	11
GU39238100	34.13	59
GU39239300	34.13	28
GU39440700	33.10	24
GU39441800	33.10	25
GU39443200	33.10	28
GU39492701	33.09	35
GU39493101	33.09	7
GU39494002	33.09	2
GU39504501	33.09	25
GU39515000	33.10	46
GU39525401	33.09	19
GU39615201	33.08	4
GU39616301	33.08	12
GU39654700	33.06	22
GU39659000	33.06	18
GU39659100	33.06	19
GU39762501	33.07	20
GU39922200	33.01	36
GU39935701	33.12	90
GU39939900	33.12	51
GU43070940	34.13	26
GU43070940	34.13	9
GU49609601	33.03	32
GU49938900	33.12	55
GU53429500	33.10	39
GU53524540	33.09	18
GU53527640	33.09	28
GU53527840	33.09	21
GU53527940	33.09	22
GU53935000	33.12	68
GU53937100	33.12	71
GU53937200	33.12	53
GU55234700	34.20	20

Code	Drawing Nr.	Pos.
GU55938585	33.12	73
GU61002000	34.14	5
GU61002100	34.14	9
GU61002100	34.15	18
GU61002100	34.20	16
GU61002100	34.20	27
GU61013800	33.06	9
GU61013800	33.12	39
GU61013800	34.15	30
GU61025100	33.12	38
GU61025200	33.12	36
GU61025400	33.12	37
GU61027200	34.15	23
GU61036801	34.15	3
GU61037000	34.16	13
GU61037500	34.16	4
GU61037600	34.16	3
GU61038000	34.16	5
GU61038100	34.16	6
GU61054900	34.16	18
GU61061300	34.11	14
GU61062010001	34.11	6
GU61062012	34.11	6
GU61062201	34.11	4
GU61062401	34.11	5
GU61065600	34.11	7
GU61065602	34.11	7
GU61066800	34.11	25
GU61108400	33.12	29
GU61108400	34.19	30
GU61108500	33.06	57
GU61108500	33.12	30
GU61114300	33.12	3
GU61126920	33.12	43
GU61238200	34.13	39
GU61265700	34.17	40
GU61270300	33.01	11
GU61270300	33.01	44
GU61270300	33.02	26
GU61270300	33.06	24
GU61270300	34.14	6
GU61270300	34.15	21
GU61442300	33.10	29
GU61462800	33.10	35
GU61514940	33.09	38
GU61515240	33.09	39
GU61712500	33.05	39
GU61712600	33.05	40
GU61740550	33.07	7
GU61740551	33.03	34
GU61740551	33.07	33
GU61934300	33.12	85
GU61934800	33.12	74
GU61934940	33.12	72
GU62436500	33.06	28
GU62493200	33.09	6
GU63635720	33.08	5
GU63721600	33.05	32
GU65105400	33.01	5
GU65105401	33.01	6
GU65603000	33.07	10
GU65603500	33.07	9
GU65738020	33.07	32
GU65740900	33.03	12
GU65741700	33.03	14
GU66659031	33.06	18
GU90271008	33.06	42

Code	Drawing Nr.	Pos.
GU90271012	33.09	24
GU90271018	34.16	12
GU90271018	34.17	42
GU90271020	34.13	33
GU90271115	34.13	29
GU90271121	34.13	19
GU90271122	34.13	4
GU90272023	33.04	4
GU90353009	34.15	4
GU90353029	34.16	24
GU90353030	33.02	17
GU90400616	34.17	21
GU90401832	34.17	39
GU90401832	34.20	29
GU90402736	34.17	19
GU90402737	34.20	3
GU90402840	34.14	18
GU90403144	33.09	17
GU90403247	33.02	41
GU90403547	33.02	3
GU90405367	34.14	13
GU90407590	33.02	15
GU90706140	34.20	4
GU90706170	34.14	25
GU90706170	34.17	12
GU90706188	33.02	38
GU90706188	34.13	18
GU90706188	34.17	23
GU90706188	34.17	38
GU90706202	33.09	26
GU90706203	33.02	7
GU90706203	34.20	25
GU90706252	34.14	11
GU90706252	34.15	22
GU90706282	34.14	29
GU90706315	33.12	6
GU90706444	34.14	27
GU90706523	34.14	23
GU90706552	33.02	40
GU90706552	33.12	94
GU90706572	33.12	93
GU90716142	33.06	29
GU91180605	33.05	24
GU91180627	33.05	20
GU91180725	33.10	50
GU91181110	33.09	4
GU91181114	33.10	13
GU91181803	33.08	8
GU91182010	34.13	40
GU91551085	33.10	47
GU91551085	33.10	53
GU91551085	33.10	67
GU91551085	33.12	26
GU91551102	33.01	21
GU91701350	34.11	23
GU92201070	33.02	14
GU92201120	34.17	28
GU92201120	34.20	30
GU92201220	34.13	13
GU92201220	34.13	16
GU92201415	34.13	10
GU92201415	34.13	27
GU92204215	34.20	2
GU92204217	33.08	3
GU92204218	33.08	17
GU92249220	33.02	32
GU92252210	34.19	3

Code	Drawing Nr.	Pos.
GU92252235	33.02	5
GU92295704	33.09	40
GU92602204	33.01	31
GU92602205	33.03	21
GU92602205	33.05	10
GU92602205	33.05	15
GU92602205	33.05	22
GU92602206	33.01	25
GU92602206	33.06	11
GU92602206	33.10	38
GU92602206	33.10	45
GU92602206	33.12	47
GU92602206	34.13	46
GU92602208	33.01	12
GU92602208	33.02	43
GU92602208	33.05	61
GU92602208	33.10	27
GU92602208	33.10	64
GU92602208	34.14	7
GU92602208	34.18	7
GU92602210	33.04	18
GU92602210	33.09	32
GU92602210	33.10	3
GU92602210	33.10	42
GU92602316	33.08	23
GU92602406	34.16	9
GU92602410	33.12	50
GU92602411	33.03	46
GU92602508	34.17	15
GU92602510	34.19	10
GU92602512	34.20	14
GU92602516	33.08	11
GU92603010	34.15	11
GU92630105	33.10	56
GU92630105	33.10	69
GU92630105	33.12	27
GU92630105	34.17	5
GU92630105	34.18	9
GU92630106	33.01	18
GU92630106	33.10	51
GU92630106	34.11	22
GU92630108	33.01	45
GU92630508	33.08	7
GU92630508	33.10	33
GU92630510	33.10	16
GU92670305	33.12	23
GU92700073	33.06	40
GU92701062	33.12	40
GU92781081	33.04	19
GU93110060	33.01	15
GU93180220	34.17	27
GU93305025	33.12	4
GU93305092	33.12	10
GU93400863	34.18	14
GU93430307	33.03	45
GU93450119	33.03	7
GU93450120	33.07	31
GU93450129	33.03	44
GU93450140	33.07	27
GU93450224	33.03	13
GU93450231	33.03	5
GU94321067	34.20	21
GU94321072	34.19	20
GU94321099	33.04	6
GU94321105	34.17	16
GU94322215	33.10	14
GU95000204	33.01	29

Code	Drawing Nr.	Pos.
GU95000205	33.03	19
GU95000206	33.01	16
GU95000206	33.12	46
GU95000208	33.09	45
GU95000208	33.10	62
GU95000210	33.10	15
GU95004205	33.05	62
GU95004205	33.12	8
GU95004205	34.17	4
GU95004206	33.01	23
GU95004206	33.06	7
GU95004206	34.13	48
GU95004206	34.16	22
GU95004206	34.18	12
GU95004208	33.04	20
GU95004208	33.05	60
GU95004208	33.09	31
GU95004208	33.10	23
GU95004208	34.17	36
GU95004208	34.18	6
GU95004210	33.04	17
GU95004210	33.09	5
GU95004210	33.10	2
GU95004210	33.10	41
GU95004215	33.06	36
GU95004215	33.07	14
GU95004215	33.09	43
GU95004217	33.08	10
GU95021105	33.03	20
GU95021105	33.05	37
GU95021105	33.05	54
GU95021105	33.07	29
GU95021106	33.06	10
GU95021106	33.10	37
GU95021106	34.13	43
GU95021106	34.13	53
GU95021108	33.10	63
GU95021110	33.03	51
GU95021110	33.12	49
GU95090142	33.07	15
GU95100059	33.05	14
GU95100059	33.05	63
GU95100059	33.10	55
GU95100059	33.10	68
GU95100059	33.12	22
GU95100059	33.12	25
GU95100116	33.09	16
GU95100116	34.15	29
GU95100121	33.01	24
GU95100121	33.01	49
GU95100139	33.10	49
GU95100141	33.01	17
GU95100141	33.05	19
GU95100250	33.06	25
GU95100251	33.06	25
GU95100255	33.09	44
GU95100523	34.19	22
GU95100709	34.14	31
GU95120105	33.10	8
GU95129080	33.01	30
GU95129100	33.05	21
GU95129100	33.05	25
GU95129100	33.05	9
GU95129110	33.06	44
GU95129110	34.13	47
GU95129180	34.15	13
GU95129260	33.06	35

Code	Drawing Nr.	Pos.
GU95129260	34.13	56
GU95187006	34.19	15
GU95187008	33.02	27
GU95401320	34.13	37
GU95500222	33.06	45
GU95500222	34.13	49
GU95500222	34.17	18
GU95500227	33.06	37
GU95512062	34.19	12
GU95770265	33.06	43
GU95770265	34.13	50
GU95780271	34.17	17
GU95980214	33.02	8
GU95980214	34.14	21
GU95980214	34.20	26
GU95985532	33.12	12
GU95990028	33.06	13
GU96451430	34.14	3
GU96451435	34.14	4
GU96451455	34.14	2
GU96506042	34.15	5
GU96508021	33.09	14
GU96508045	33.02	12
GU96510125	34.15	15
GU96510182	34.15	14
GU98052220	33.05	8
GU98052220	33.10	54
GU98052220	33.10	66
GU98052220	34.18	15
GU98052222	33.12	24
GU98052245	33.05	18
GU98052325	33.06	50
GU98052325	34.13	42
GU98052325	34.13	52
GU98052326	33.06	8
GU98052330	33.12	45
GU98052350	33.10	48
GU98052430	34.17	35
GU98052435	33.05	49
GU98052440	33.05	48
GU98052460	33.08	6
GU98052490	34.14	32
GU98052550	33.04	16
GU98052555	33.10	72
GU98052565	33.10	71
GU98054212	33.05	13
GU98054214	33.05	26
GU98054214	33.12	7
GU98054214	34.17	3
GU98054216	33.05	64
GU98054312	33.01	22
GU98054312	33.10	36
GU98054314	33.01	48
GU98054314	34.17	30
GU98054314	34.17	47
GU98054314	34.19	14
GU98054314	34.20	6
GU98054314	34.20	9
GU98054318	34.11	21
GU98054320	33.01	14
GU98054322	33.10	44
GU98054418	33.02	30
GU98054418	33.10	22
GU98054420	33.01	43
GU98054425	33.02	25
GU98054522	33.12	48
GU98054530	33.10	12

Code	Drawing Nr.	Pos.
GU98110199	33.10	40
GU98200408	33.01	28
GU98202510	33.05	36
GU98202530	33.03	18
GU98270627	33.07	17
GU98280412	33.05	57
GU98290511	33.01	52
GU98310610	34.15	28
GU98310612	34.18	11
GU98620245	33.05	53
GU98620312	33.09	15
GU98620330	34.14	17
GU98620330	34.17	32
GU98620330	34.19	11
GU98620330	34.20	18
GU98620435	33.09	8
GU98620435	34.17	33
GU98620435	34.20	19
GU98620445	34.15	20
GU98620540	33.09	9
GU98620555	33.09	3
GU98622316	34.16	21
GU98622325	34.14	16
GU98622325	34.15	16
GU98622422	33.06	23
GU98622522	33.10	7
GU98623430	33.09	29
GU98820430	33.10	26
GU98820435	34.18	4
GU98820450	34.18	3
GU98822325	34.15	7
GU98822416	33.09	46
GU98822418	33.10	32
GU98822420	33.10	32
GU98822420	33.10	61
GU98822420	34.18	5
GU98830225	33.07	28
GU98830430	33.09	37
GU99105129	33.10	19

Assembly	CHASSIS
Code	33.01
Description	Carrosserie
Revision	1

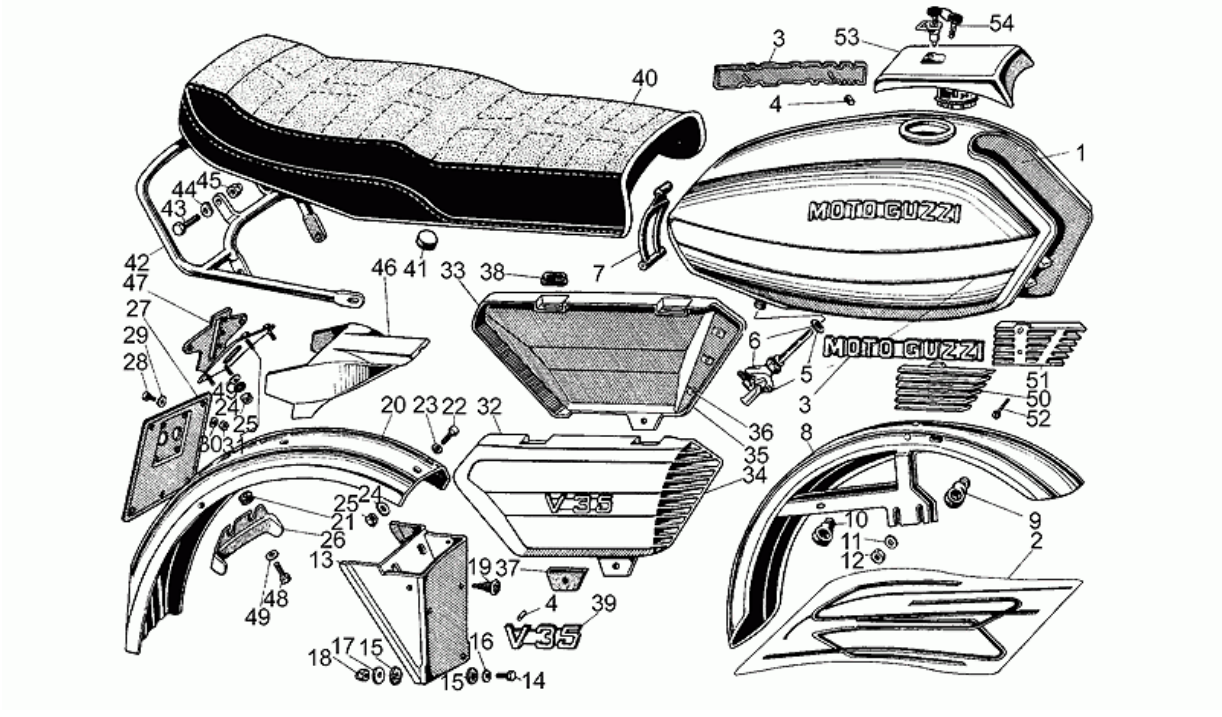

Pos.	Code	Description	Q.ty	Variants
1	GU191002551	Reservoir carburant	1	**Couleur:**Brut[gr]
2	GU19923300	Décalco série	1	
3	GU14917300	Décalco "Moto Guzzi"	2	
4	GU14105100	Agrafe	8	
5	GU65105400	Robinet ess. d.	1	
6	GU65105401	Robinet ess. g.	1	
7	GU19102750	Tirant	1	
8	GU194343001	Garde-boue Av.	1	**Couleur:**Brut[gr]
9	GU19659700	Caoutchouc	2	
10	GU19436500	Oeillet	1	
11	GU61270300	Rondelle élastique 8x15x0,3	4	
12	GU92602208	Ecrou M8X1,25	4	
13	GU19438700	Bavette anti-éclaboussures	1	
14	GU98054320	Vis M6X20	2	
15	GU93110060	Caoutchouc	8	
16	GU95000206	Rondelle	4	
17	GU95100141	Rondelle 6,4x12x1,2	4	
18	GU92630106	Ecrou M6x1	4	
19	GU19705900	Tampon	2	
20	GU194370201	Garde-boue Ar.	1	**Couleur:**Brut[gr]
21	GU91551102	Passe-câble	1	
22	GU98054312	Vis	2	
23	GU95004206	Rondelle 6,15x11x0,8	2	
24	GU95100121	Rondelle 5,3x10x0,5	4	
25	GU92602206	Ecrou	4	
26	GU19438500	Support câblage	1	
27	GU01474630	Porte-plaque	1	
28	GU98200408	Vis	4	

Assembly	CHASSIS
Code	33.01
Description	Carrosserie
Revision	1

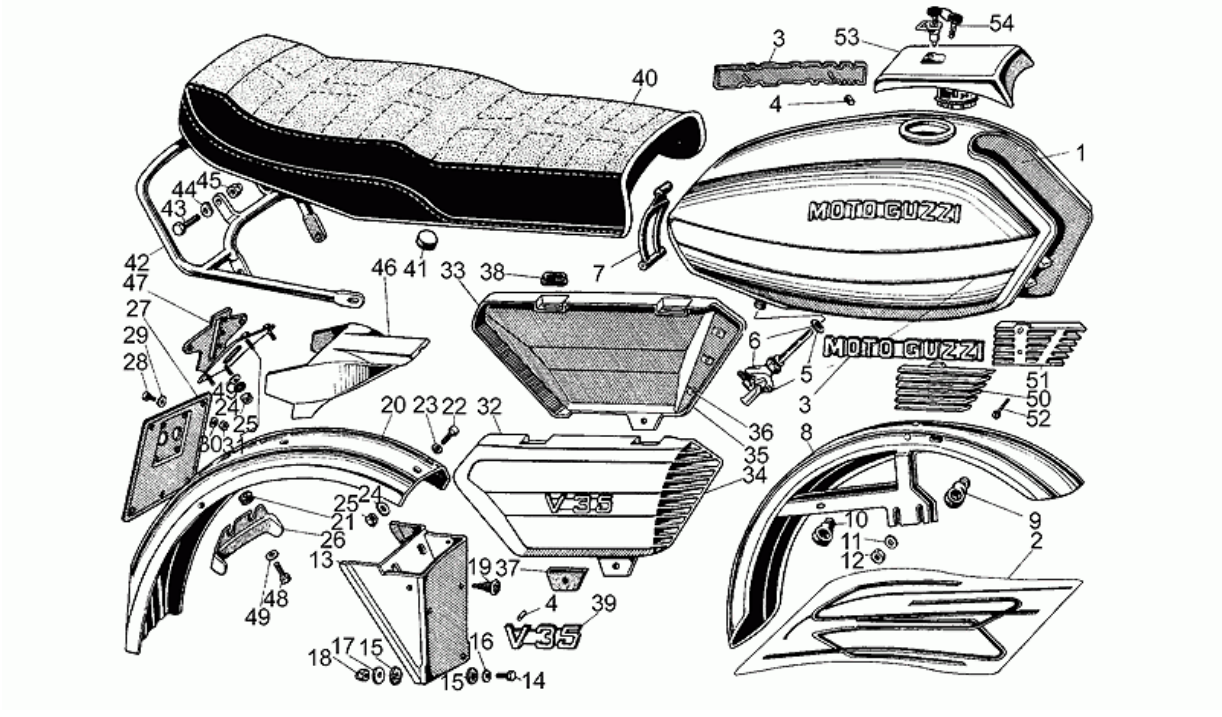

Pos.	Code	Description	Q.ty	Variants
29	GU95000204	Rondelle	4	
30	GU95129080	Rondelle	4	
31	GU92602204	Ecrou	4	
32	GU194762501	Panneau latéral droit brut	1	**Couleur:**Brut[gr]
33	GU194763501	Panneau latéral gauche brut	1	**Couleur:**Brut[gr]
34	GU19478150	Grille droite	1	
35	GU19478250	Grille gauche	1	
36	GU39922200	Plaquette	6	
37	GU19478550	Caoutchouc	2	
38	GU19478750	Caoutchouc	4	
39	GU19922000	Décor "V35"	2	**Spécifications techniques:**Version "V35"[V35]
39	GU19922051	Plaque "V50"	2	**Spécifications techniques:**Version "V50"[V50]
40	GU19460505	Selle	1	
41	GU19461650	Caoutchouc	4	
42	GU19464350	Poignée pass.	1	
43	GU98054420	Vis M8X20	2	
44	GU61270300	Rondelle élastique 8x15x0,3	2	
45	GU92630108	Ecrou	2	
46	GU19741000	Corps feu AR	1	
47	GU19741200	Support	1	
48	GU98054314	Vis	2	
49	GU95100121	Rondelle 5,3x10x0,5	4	
50	GU19925000	Grille droite	1	
51	GU19925100	Grille gauche	1	
52	GU98290511	Vis TC M5x10	2	
53	GU19103950	Bouchon réservoir essence	1	
54	GU19105052	Serrure trappe ess.	1	

Assembly	CHASSIS
Code	33.02
Description	Couple conique
Revision	1

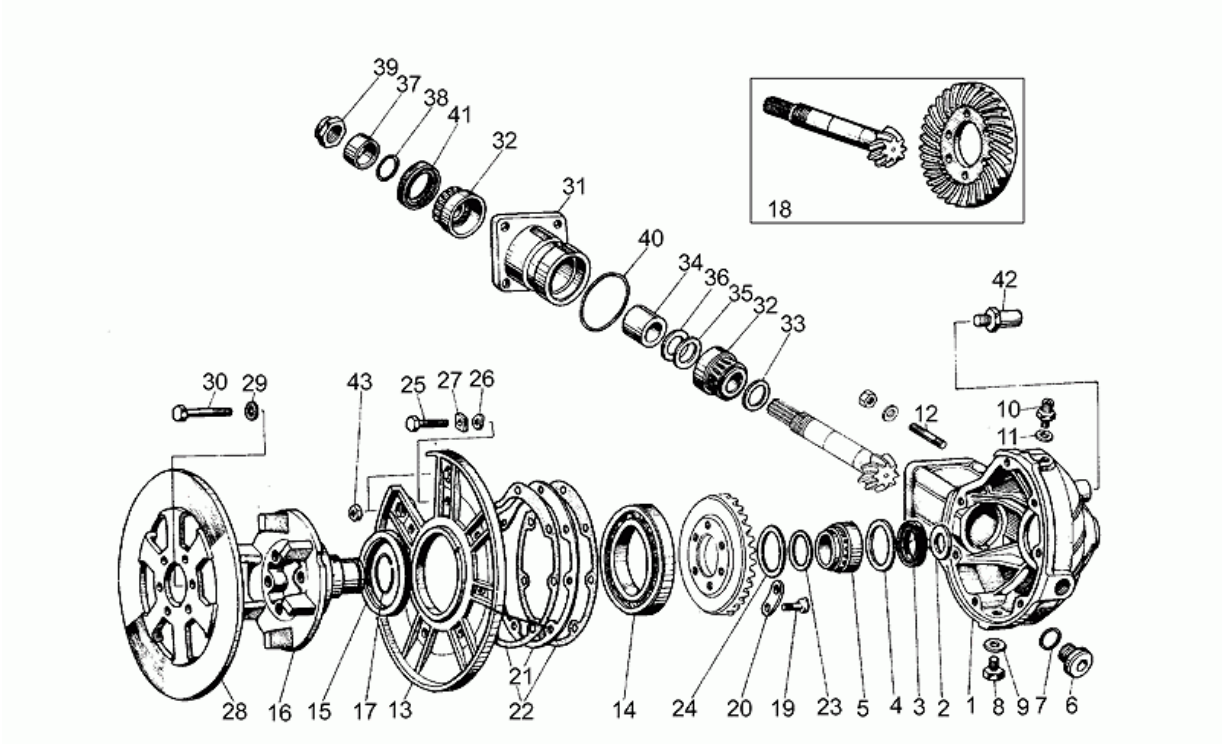

Pos.	Code	Description	Q.ty	Variants
1	GU19350322	Boîtier transm.brut	1	
2	GU19351900	Rondelle d'appui	1	
3	GU90403547	Bague d'étanchéité 35x47x7	1	
4	GU19351100	Rondelle d'appui	1	
5	GU92252235	Roulement à rouleaux 35x50x17	1	
6	GU12022600	Bouchon huile	1	
7	GU90706203	Joint torique 20,24X2,62	1	
8	GU95980214	Bouchon niveau huile	1	
9	GU10528900	Garniture	1	
10	GU19206501	Bouchon purge	1	
11	GU10528900	Garniture	1	
12	GU96508045	Vis sans tête 8x46	4	
13	GU19350421	Couvercle	1	
14	GU92201070	Roulement à billes 70x110x13	1	
15	GU90407590	Bague d'étanchéité 75x90x8	1	
16	GU19351401	Pivot	1	
17	GU90353030	Bague de butée	1	
18	GU20354621	Couple conique Z=8/31	1	
19	GU12067701	Vis M8X25	6	
20	GU12356400	Plaquette de sécurité	3	
21	GU19355400	Cale 0,8 mm	1	
21	GU19355402	Cale 0,9 mm	1	
21	GU19355404	Cale 1 mm	1	
21	GU19355406	Cale 1,1 mm	1	
21	GU19355408	Cale 1,2 mm	1	
21	GU19355410	Cale 1,3 mm	1	
22	GU19350700	Joint	2	
23	GU19352300	Rondelle éventail	1	

Assembly	CHASSIS
Code	33.02
Description	Couple conique
Revision	1

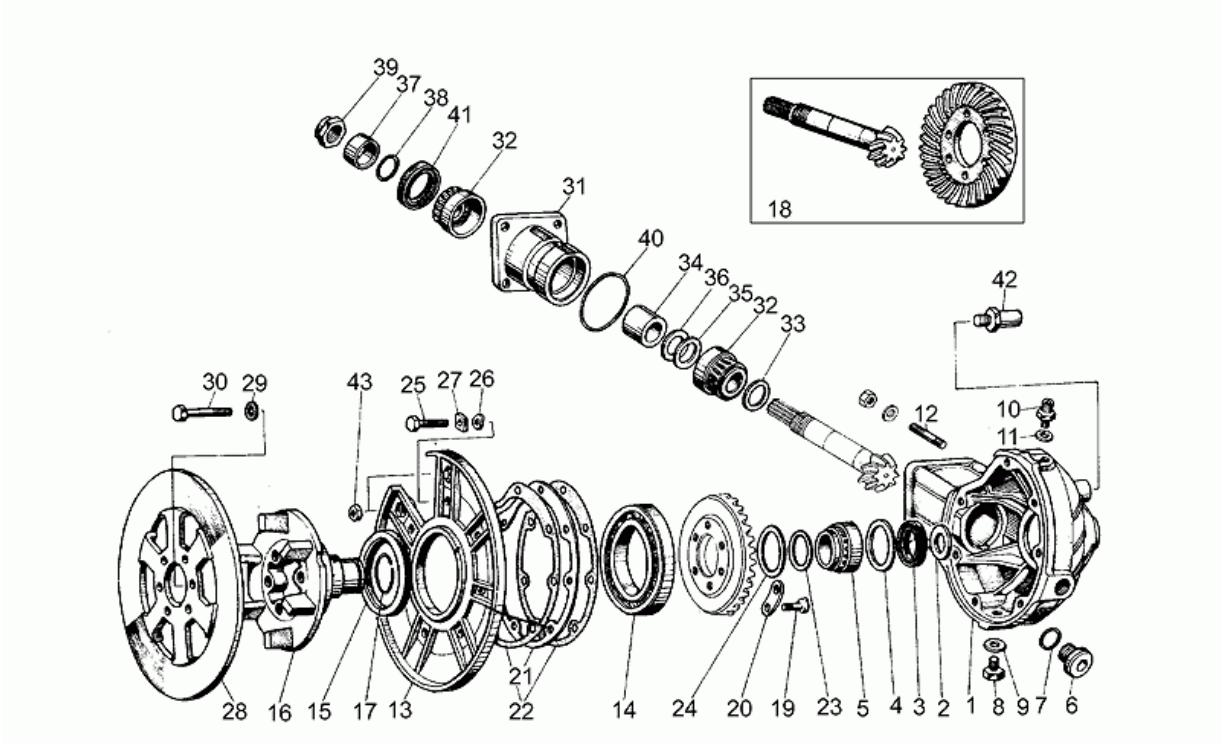

Pos.	Code	Description	Q.ty	Variants
24	GU19353500	Rondelle éventail	1	
25	GU98054425	Vis M8X25	7	
26	GU61270300	Rondelle élastique 8x15x0,3	7	
27	GU95187008	Plaquette	7	
28	GU19635700	Disque frein arrière	1	
29	GU14615901	Rondelle 8,4X13X0,8	6	
30	GU98054418	Vis	6	
31	GU19352401	Habillage roulement	1	
32	GU92249220	Roulement à rouleaux 20x47x14	2	
33	GU19355300	Cale 1 mm	2	
33	GU19355302	Cale 1,2 mm	2	
33	GU19355305	Cale 1,5 mm	2	
34	GU19355100	Entretoise	1	
35	GU19355200	Rondelle ajustem. 0,1 mm	2	
36	GU19355202	Rondelle ajustem. 0,15 mm	11	
37	GU19356801	Entretoise	1	
38	GU90706188	Bague d'étanchéité 18,77X1,78	1	
39	GU19356700	Ecrou	1	
40	GU90706552	Bague d'étanchéité	1	
41	GU90403247	Bague d'étanchéité	1	
42	GU19555200	Pivot	1	
43	GU92602208	Ecrou M8X1,25	2	

PIAGGIO&C.s.p.a.

Assembly	CHASSIS
Code	33.03
Description	Phares-klaxon
Revision	1

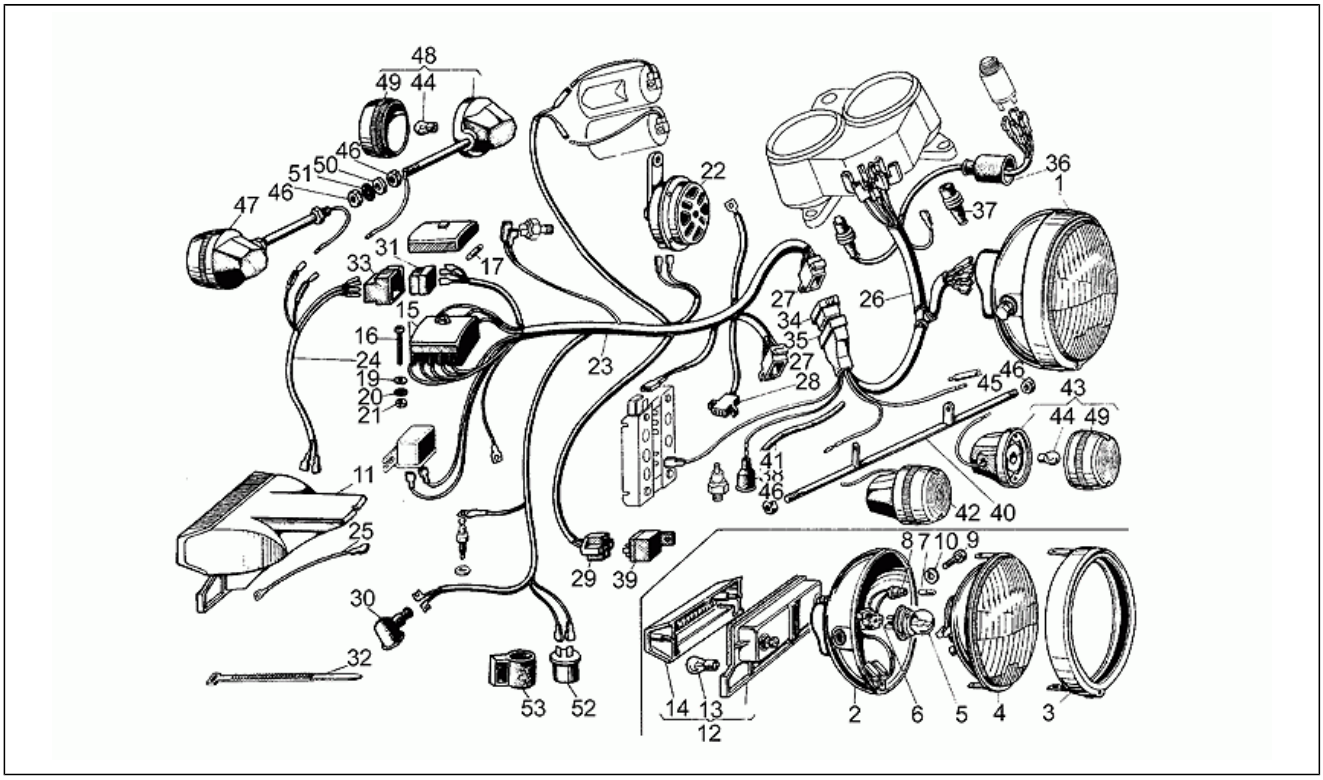

Pos.	Code	Description	Q.ty	Variants
1	GU28740533	Feu avant	1	
2	GU19740458	Calotte	1	
3	GU19740454	Cadre phare	1	
4	GU19740200	Groupe optique	1	
5	GU93450231	Lampe (ou Ampoule) 12V 45/40W	1	
6	GU17740364	Bloc démarreur	1	
7	GU93450119	Lampe (ou Ampoule) 12V-4W	1	
8	GU17740405	Porte-ampoule	1	
9	GU14740355	Vis	2	
10	GU14740356	Rondelle	2	
11	GU19740900	Phare AR cpl.	1	
12	GU65740900	Feu arrière	1	
13	GU93450224	Lampe (ou Ampoule) 12V/5-21W	2	
14	GU65741700	Glace phare AR	1	
15	GU19743000	Boîte à fusibles	1	
17	GU17742550	Fusible 16A	6	
18	GU98202530	Vis	2	
19	GU95000205	Rondelle	2	
20	GU95021105	Rondelle évent.	2	
21	GU92602205	Ecrou	2	
22	GU14743700	Klaxon	1	
23	GU19747100	Circuit electrique	1	
24	GU19747300	Cablage	1	
25	GU14748100	Câble masse	1	
26	GU19747200	Câblage feu AR	1	
27	GU19723100	Connecteur 12 vie	2	
28	GU19723000	Connecteur 3 vie	1	
29	GU19732400	Connecteur	1	

Assembly	CHASSIS
Code	33.03
Description	Phares-klaxon
Revision	1

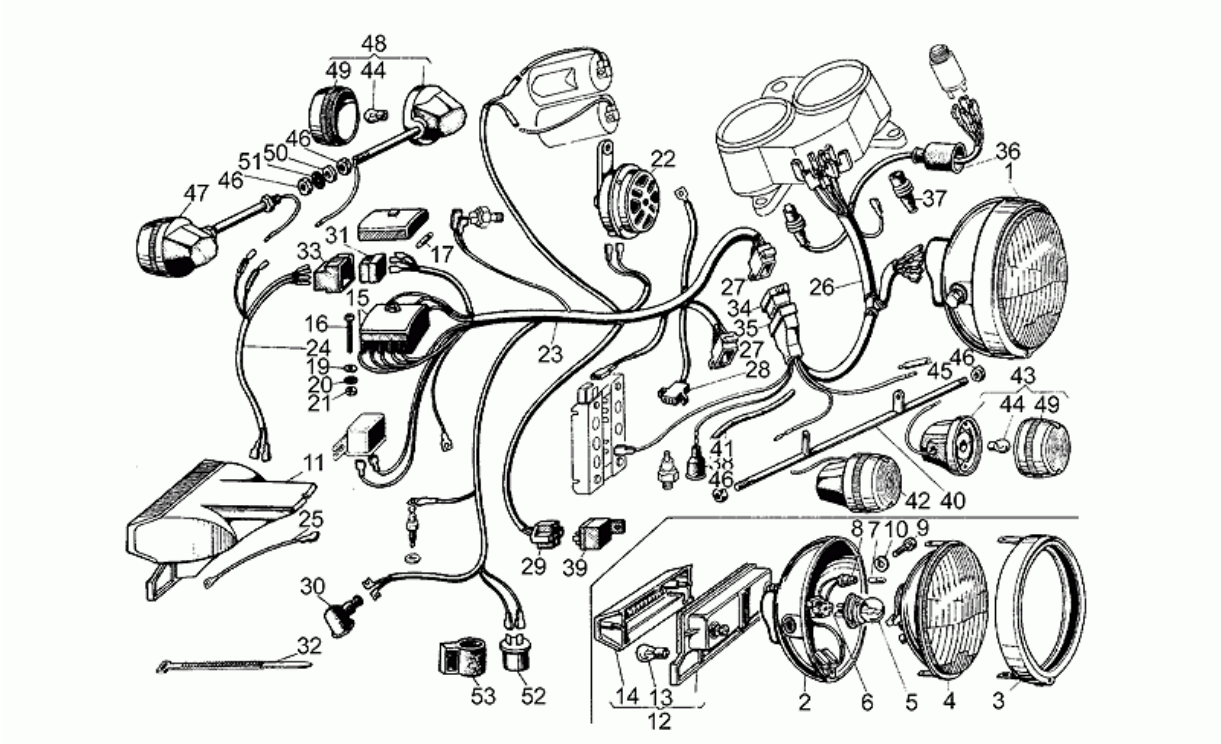

Pos.	Code	Description	Q.ty	Variants
30	GU12735100	Capuchon	1	
31	GU17756200	Connecteur 4 vie	1	
32	GU49609601	Collier 2,4x92	2	
33	GU17736300	Connecteur 4 vie	1	
34	GU61740551	Connecteur	1	
35	GU35755780	Protection caoutch.	1	
36	GU25741325	Capuchon	1	
37	GU17755300	Caoutchouc	2	
38	GU12717600	Capuchon	1	
39	GU19732500	Relais démarrage	1	
40	GU19751300	Support clignotant AV	1	
41	GU19750800	Gaine	1	
42	GU14750650	Clignotant AV	1	
43	GU14750650	Clignotant AV	1	
44	GU93450129	Lampe (ou Ampoule) 12V-10W	4	
45	GU93430307	Gaine	1	
46	GU92602411	Ecrou	4	
47	GU14750650	Clignotant AV	1	
48	GU14750650	Clignotant AV	1	
49	GU14753750	Vitre clignotant	4	
50	GU14753450	Entretoise	2	
51	GU95021110	Rondelle évent.	2	
52	GU17750520	Clignotement	1	
53	GU17751200	Bloc	1	

Assembly	CHASSIS
Code	33.04
Description	Fourche arriere
Revision	1

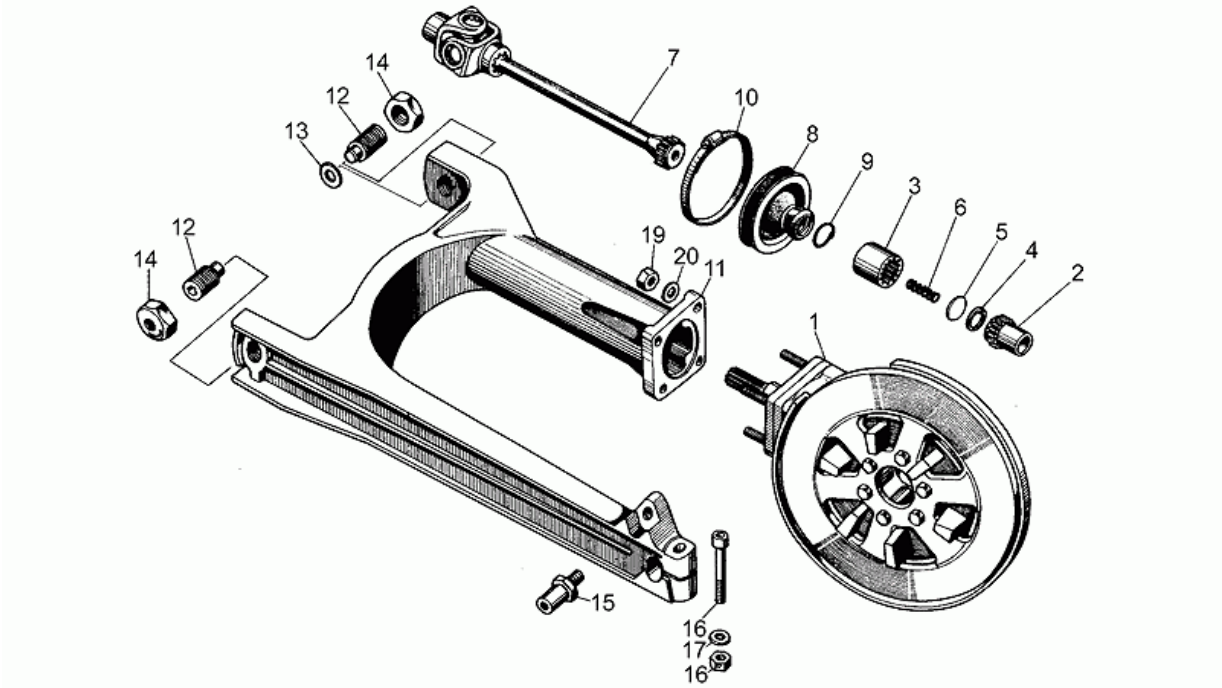

Pos.	Code	Description	Q.ty	Variants
1	GU19350220	Boîte transm.cpl.brute	1	
2	GU19327701	Manchon	1	
3	GU19328801	Manchon	1	
4	GU90272023	Bague seeger	1	
5	GU19327601	Disque	1	
6	GU94321099	Ressort	1	
7	GU19328001	Joint	1	
8	GU19548001	Collier de protection	1	
9	GU19548101	Ressort	1	
10	GU12548201	Collier 62/82 mm	1	
11	GU19540200	Fourche arriere	1	
12	GU19547000	Pivot	2	
13	GU35214300	Cale	1	
14	GU14547800	Ecrou	2	
15	GU19555200	Pivot	1	
16	GU98052550	Vis	1	
17	GU95004210	Rondelle 10,2x18x2	1	
18	GU92602210	Ecrou	1	
19	GU92781081	Ecrou	4	
20	GU95004208	Rondelle	4	

Assembly	CHASSIS
Code	33.05
Description	Circuit electrique
Revision	1

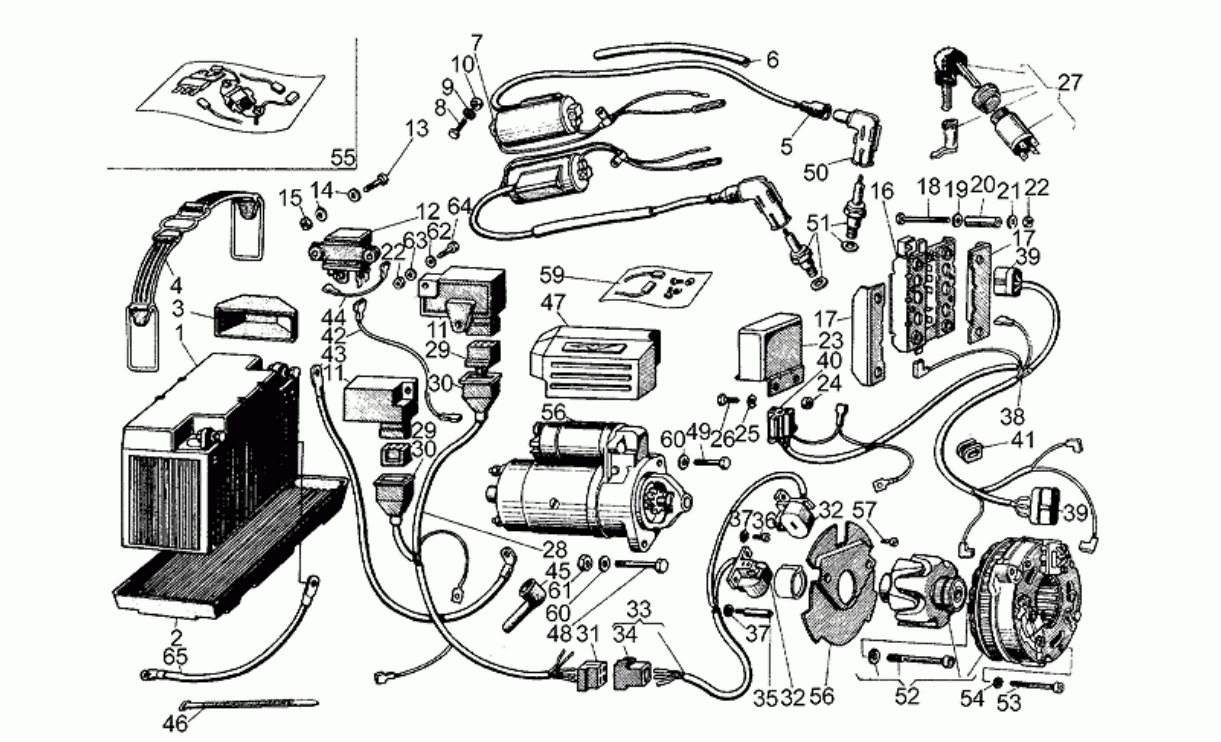

Pos.	Code	Description	Q.ty	Variants
1	GU28704552	Batterie 12V-24Ah	1	
2	GU14707000	Cuve	1	
3	GU14705350	Cône fixation accumulateur	1	
4	GU19704800	Bride	1	
5	GU14717600	Capuchon	2	
6	GU19718600	Gaine	2	
7	GU31716560	Bobine HT	2	
8	GU98052220	Vis	4	
9	GU95129100	Rondelle élastique 5,3X10X0,5	4	
10	GU92602205	Ecrou	4	
11	GU19721400	Centrale	2	
12	GU19732500	Relais démarrage	1	
13	GU98054212	Vis	2	
14	GU95100059	Rondelle 5,25x14x1,5	4	
15	GU92602205	Ecrou	2	
16	GU17704300	Redresseur Bosch	1	
17	GU14704205	Couvercle	2	
18	GU98052245	Vis	4	
19	GU95100141	Rondelle 6,4x12x1,2	4	
20	GU91180627	Entretoise	4	
21	GU95129100	Rondelle élastique 5,3X10X0,5	4	
22	GU92602205	Ecrou	8	
23	GU29703800	Régulateur de tension BOSCH	1	
24	GU91180605	Entretoise	2	
25	GU95129100	Rondelle élastique 5,3X10X0,5	2	
26	GU98054214	Vis	2	
27	GU19105150	Bloc	1	
28	GU19722100	Cablage	1	

Assembly	CHASSIS
Code	33.05
Description	Circuit electrique
Revision	1

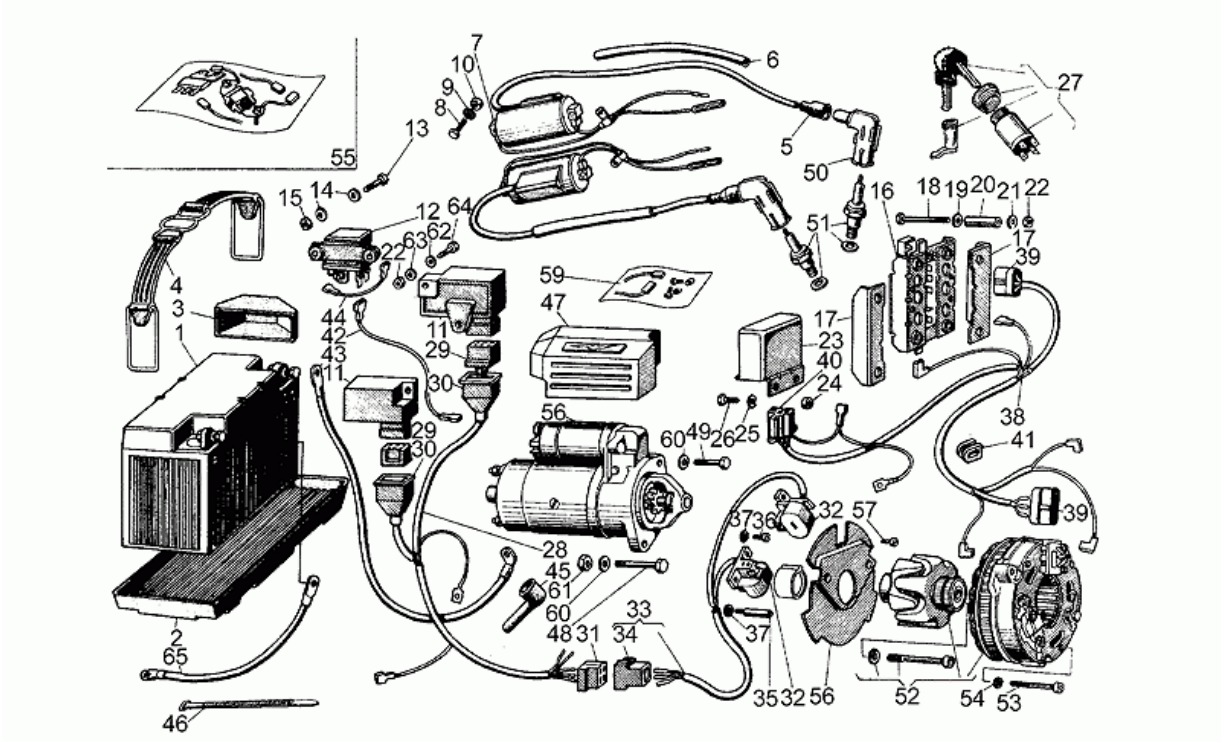

Pos.	Code	Description	Q.ty	Variants
29	GU19721700	Connecteur 6 vie	2	
30	GU19721500	Caoutchouc	2	
31	GU17756200	Connecteur 4 vie	1	
32	GU63721600	Pick-up	2	
33	GU19722200	Circuit electrique	1	
34	GU17736300	Connecteur 4 vie	1	
35	GU19722600	Goujon	2	
36	GU98202510	Vis	2	
37	GU95021105	Rondelle évent.	4	
38	GU19747400	Cablage	1	
39	GU61712500	Connecteur 3 vie	2	
40	GU61712600	Connecteur	1	
41	GU19007700	Caoutchouc	1	
42	GU19748200	Cable	1	
43	GU19748000	Cablage	1	
44	GU19748300	Cable	1	
45	GU19707100	Capuchon	2	
46	GU14609650	Collier 3,6x20,6	10	
47	GU19733350	Protection	1	
48	GU98052440	Vis	1	
49	GU98052435	Vis M8X35	1	
50	GU14717400	Pipe bougie	2	
51	GU31717060	Bougie NGK B8ES	2	
52	GU17712400	Alternateur Bosch	1	
53	GU98620245	Vis M5X45	3	
54	GU95021105	Rondelle évent.	3	
55	GU17719900	Kit réparation	1	
56	GU19722500	Protection pick-up	1	

PIAGGIO&C.s.p.a.

Assembly	CHASSIS
Code	33.05
Description	Circuit electrique
Revision	1

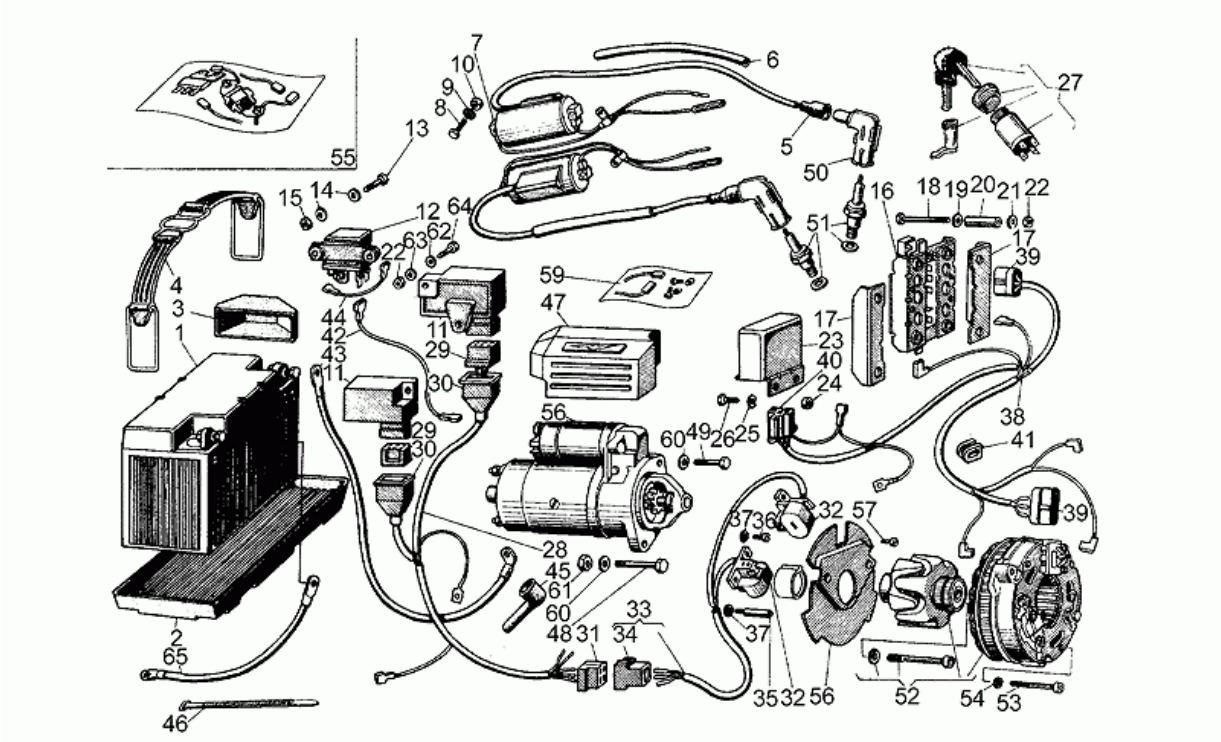

Pos.	Code	Description	Q.ty	Variants
57	GU98280412	Vis	2	
58	GU30730711	Démarreur Valeo	1	
59	GU14730570	Kit rév. démarreur	1	
60	GU95004208	Rondelle	2	
61	GU92602208	Ecrou M8X1,25	1	
62	GU95004205	Rondelle	2	
63	GU95100059	Rondelle 5,25x14x1,5	6	
64	GU98054216	Vis	4	
65	GU19748400	Câblage masse-batterie	1	

Assembly	CHASSIS
Code	33.06
Description	Sys.frein avant/arrière
Revision	1

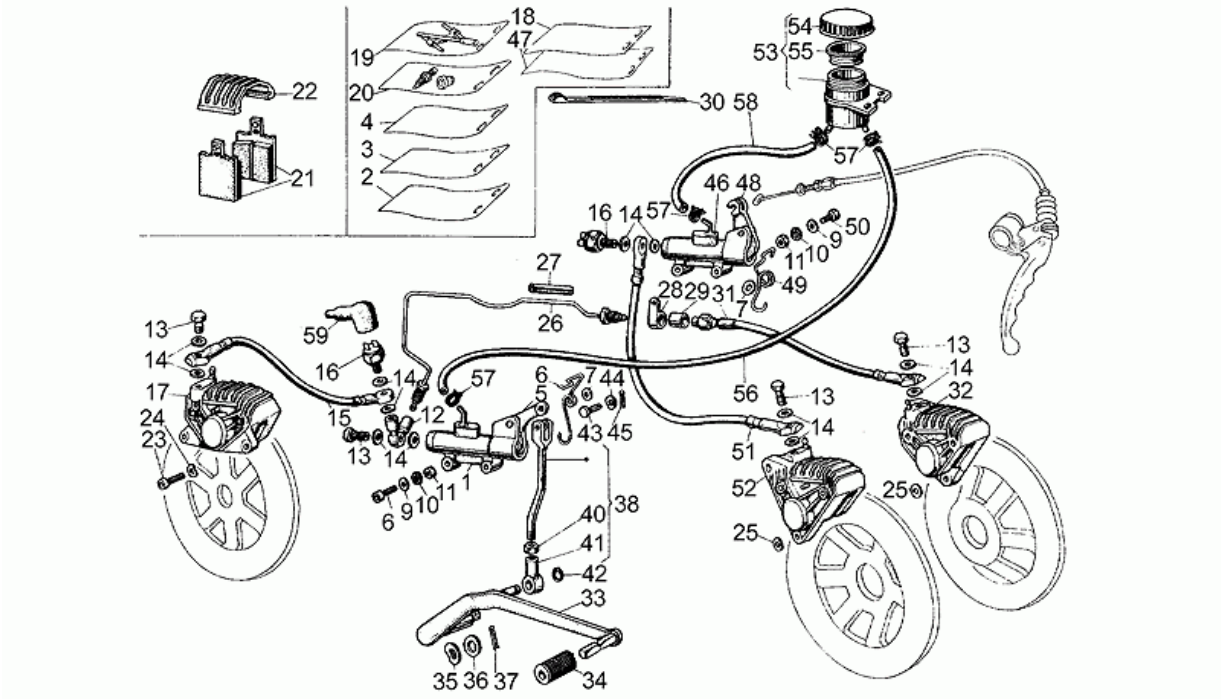

Pos.	Code	Description	Q.ty	Variants
1	GU31666990	Maît.cyl. frein AR	1	
2	GU17659350	Kit révision pompe	1	
3	GU19659600	Kit révision levier	2	
4	GU19659500	Gr.révision raccordde pomp	2	
5	GU19667500	Levier de frein AR	1	
6	GU19667600	Ressort man.ferin ar.	1	
7	GU95004206	Rondelle 6,15x11x0,8	4	
8	GU98052326	Vis	2	
9	GU61013800	Rondelle spéciale	2	
10	GU95021106	Rondelle évent.	4	
11	GU92602206	Ecrou	4	
12	GU19668000	Raccord	1	
13	GU95990028	Vis tuyau huile *	4	
14	GU25656100	Garniture	12	
15	GU17657101	Tuyau huile frein	1	
16	GU14657050	Interrupteur stop	2	
17	GU23653011	Pince frein arrière	1	
18	GU39659000	Kit révision pince BREMBO	3	
18	GU66659031	Kit révision pince GRIMECA	2	**Spécifications techniques:**See technical comm.n.298 of 1995[29895C]
19	GU31659165	Axes+ressort GRIMECA	2	**Spécifications techniques:**See technical comm.n.298 of 1995[29895C]
19	GU39659100	Axes+ressort BREMBO	3	
20	GU14659200	Kit révision purge	3	
20	GU31659265	Purge+capuchon GRIMECA	1	**Spécifications techniques:**See technical comm.n.298 of 1995[29895C]
21	GU27654610	Plaquettes-paire BREMBO	4	
21	GU31654665	Plaquettes-paire GRIMECA	2	**Spécifications techniques:**See technical comm.n.298 of 1995[29895C]

Assembly	CHASSIS
Code	33.06
Description	Sys.frein avant/arrière
Revision	1

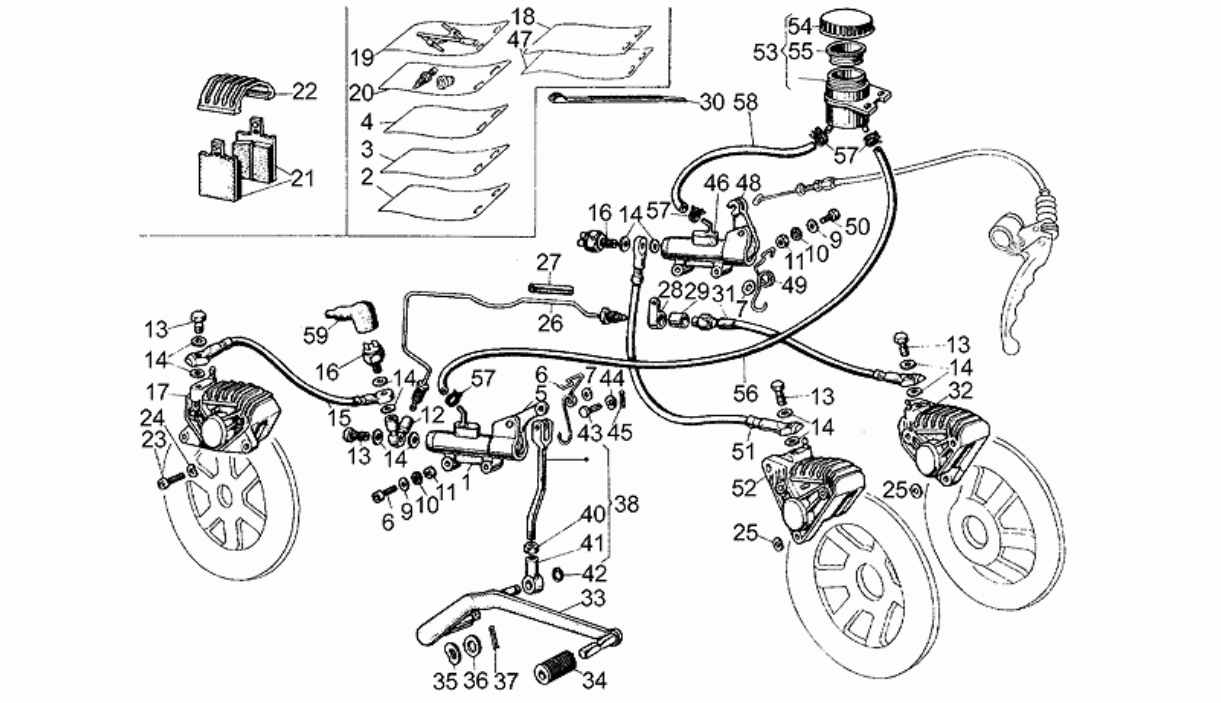

Pos.	Code	Description	Q.ty	Variants
22	GU31654765	Couvercle pince frein GRIMECA	1	**Spécifications techniques:**See technical comm.n.298 of 1995[29895C]
22	GU39654700	Couvercle pince frein BREMBO	3	
23	GU98622422	Vis	6	
24	GU61270300	Rondelle élastique 8x15x0,3	6	
25	GU95100250	Rondelle 8,5X18X0,5	4	
25	GU95100251	Rondelle 8,5X18X0,8	4	
26	GU19658700	Tuyau	1	
27	GU17659650	Segment d'étanchéité	2	
28	GU62436500	Collier	1	
29	GU90716142	Anneau élastique	1	
30	GU14609650	Collier 3,6x20,6	2	
31	GU14658850	Tuyau huile frein souple	1	
32	GU31652365	Pince frein AV G Grimeca	1	**Spécifications techniques:**See technical comm.n.298 of 1995[29895C]
33	GU19677000	Levier de frein AR	1	
34	GU14251001	Caoutchouc	1	
35	GU95129260	Rondelle élastique	1	
36	GU95004215	Rondelle plate	1	
37	GU95500227	Goupille	1	
38	GU19675000	Tirant pour boite vitesse cpl.	1	
40	GU92700073	Ecrou	1	
41	GU18257551	Bloc	1	
42	GU90271008	Bague seeger	1	
43	GU95770265	Goupille	1	
44	GU95129110	Rondelle	1	
45	GU95500222	Goupille	1	
46	GU31666990	Maît.cyl. frein AR	1	

Assembly	CHASSIS
Code	33.06
Description	Sys.frein avant/arrière
Revision	1

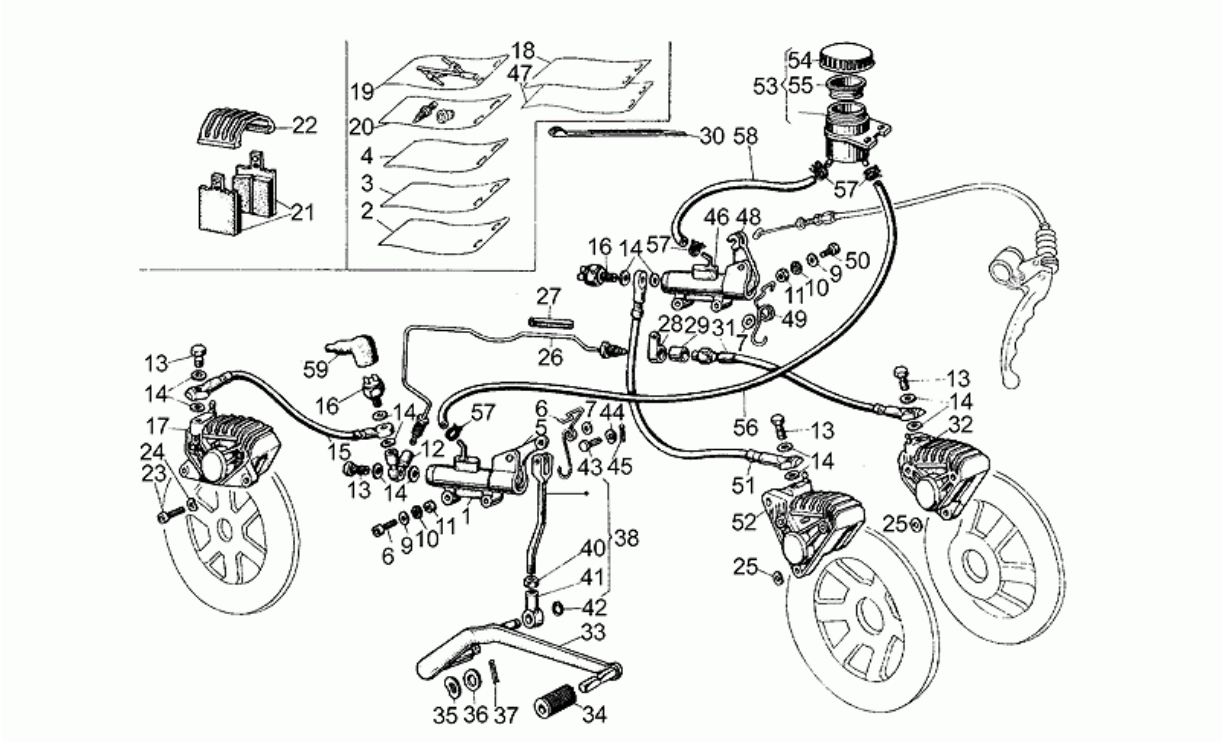

Pos.	Code	Description	Q.ty	Variants
47	GU17659352	Kit rév. pompe AR	1	
48	GU19663300	Levier	1	
49	GU19662600	Ressort pompe frein AV	1	
50	GU98052325	Vis	2	
51	GU19657100	Tuyau huile frein souple	1	
52	GU31652265	Pince frein AV D Grimeca	1	**Spécifications techniques:**See technical comm.n.298 of 1995[29895C]
53	GU19665000	Réserv. huile freins	1	
54	GU14661100	Couvercle	1	
55	GU14661300	Membrane	1	
56	GU00823950050	Tuyau huile	1	
57	GU61108500	Collier D9	4	
58	GU00823947120	Tuyau	1	
59	GU12735100	Capuchon	2	

PIAGGIO&C.s.p.a.

Assembly	CHASSIS
Code	33.07
Description	Guidon - Commandes
Revision	1

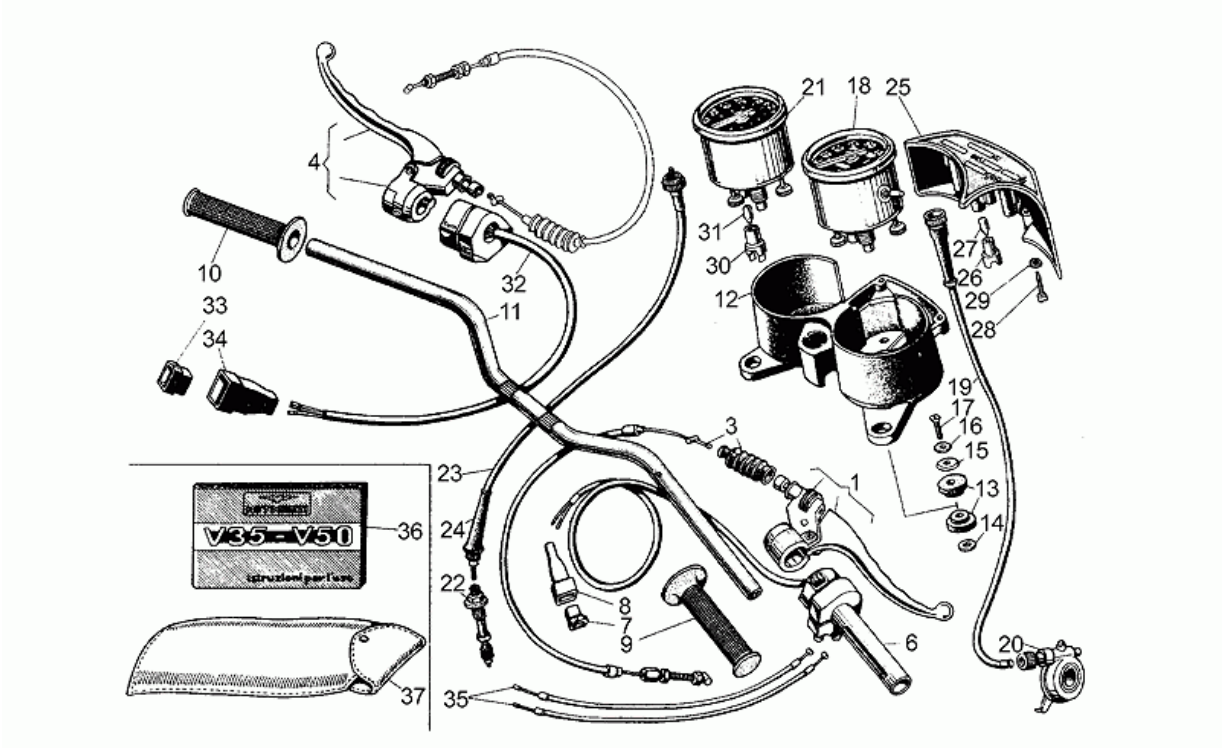

Pos.	Code	Description	Q.ty	Variants
1	GU19605400	Levier frein avant	1	
3	GU19625451	Câble frein avant	1	
4	GU19605501	Commande levier embrayage	1	
6	GU17755800	Capuchon	1	
7	GU61740550	Connecteur	1	
8	GU17755800	Capuchon	1	
9	GU65603500	Poignée dr.	1	
10	GU65603000	Poignée gc.	1	
11	GU30600310	Guidon	1	
12	GU19501500	Support instruments	1	
13	GU14502250	Silent block	4	
14	GU95004215	Rondelle plate	2	
15	GU95090142	Rondelle	2	
16	GU18577850	Rondelle	2	
17	GU98270627	Vis	2	
18	GU19761500	Compteur kilométrique	1	
19	GU19760400	Transmission tachymètre	1	
20	GU39762501	Renvoi compteur km	1	
21	GU17767250	Compte-tours	1	**Pays:** Allemagne[D] **Spécifications techniques:**Version "V35"[V35]
21	GU17767260	Compte-tours	1	**Spécifications techniques:**Version "V50"[V50]
21	GU19767200	Compte-tours	1	**Spécifications techniques:**Version "V35"[V35]
22	GU14769200	Renvoi Z=14	1	
23	GU19768100	Transmission compte-tours	1	
24	GU17762200	Gaine	2	
25	GU19766900	Support	1	
26	GU14768651	Porte-ampoule	5	
27	GU93450140	Lampe (ou Ampoule) 12V-1,2W	5	

Assembly	CHASSIS
Code	33.07
Description	Guidon - Commandes
Revision	1

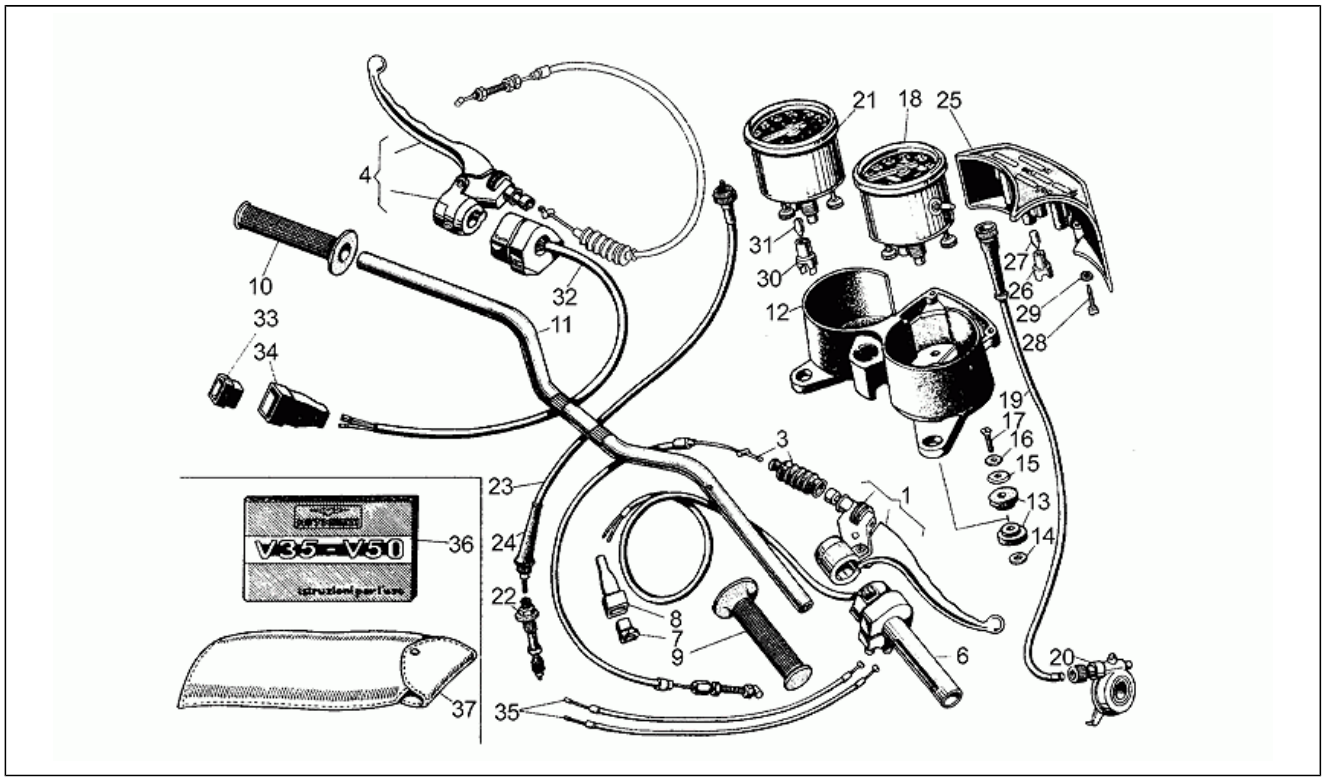

Pos.	Code	Description	Q.ty	Variants
28	GU98830225	Vis	2	
29	GU95021105	Rondelle évent.	2	
30	GU14768650	Porte-ampoule	2	
31	GU93450120	Lampe (ou Ampoule) 12v-3w	2	
32	GU65738020	Déviateur feux gche	1	
33	GU61740551	Connecteur	1	
34	GU35755780	Protection caoutch.	1	
35	GU19117550	Transm. commande gaz	2	
36	GU19900002	Livret d'util.et entret.	1	**Pays:**France[F]
36	GU19900003	Livret d'util.et entret.	1	**Pays:**Allemagne[D]
37	GU28929940	Trousse à outils	1	

Assembly	CHASSIS
Code	33.08
Description	Roues
Revision	1

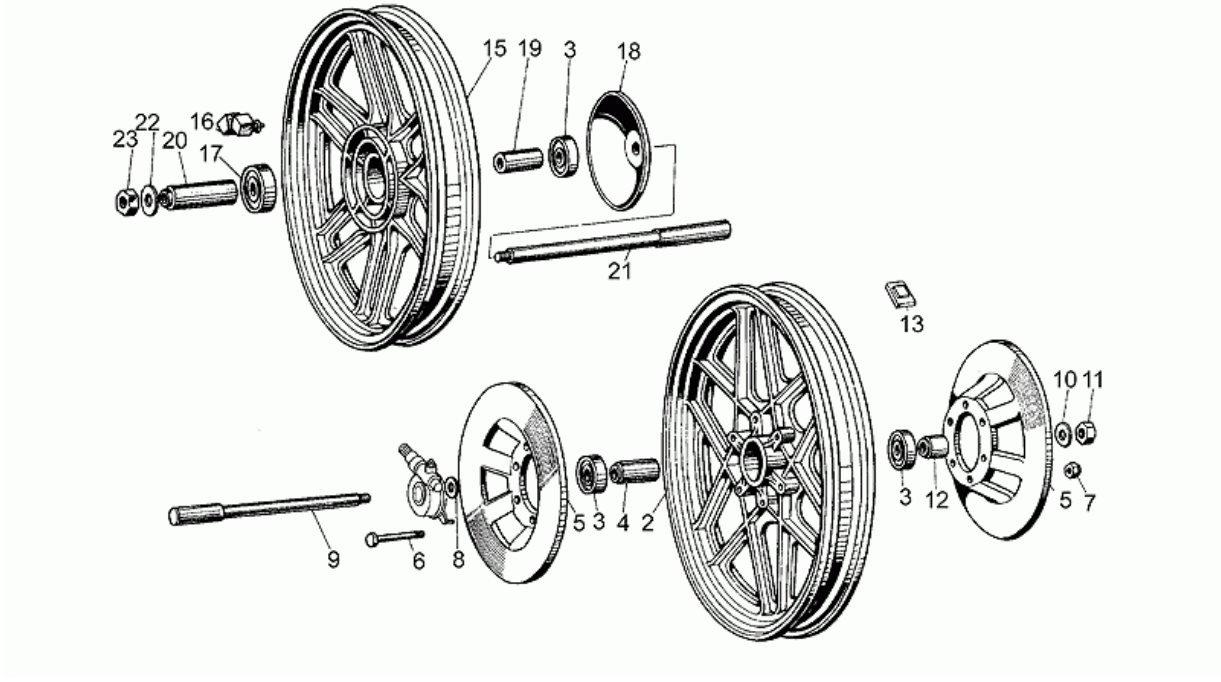

Pos.	Code	Description	Q.ty	Variants
2	GU19610300	Roue Av.	1	
3	GU92204217	Roulement	3	
4	GU39615201	Entretoise interne	1	
5	GU63635720	Disque frein avant	2	
6	GU98052460	Vis	6	
7	GU92630508	Ecrou	6	
8	GU91181803	Entretoise	1	
9	GU19614100	Axe de roue AV	1	
10	GU95004217	Rondelle 17X27X2	1	
11	GU92602516	Ecrou M16X1,5	1	
12	GU39616301	Entretoise	1	
13	GU14616150	Contrepoids	2	
15	GU19630600	Roue arrière	1	
16	GU19632502	Joint en caoutchouc g.	6	
17	GU92204218	Roulement	1	
18	GU19636400	Protection	1	
19	GU19634000	Entretoise interne roulements	1	
20	GU19634100	Entretoise	1	
21	GU19633300	Axe de roue AR	1	
22	GU14634400	Rondelle	1	
23	GU92602316	Ecrou M6X1,5	1	

Assembly	CHASSIS
Code	33.09
Description	Suspension avant/arriere
Revision	1

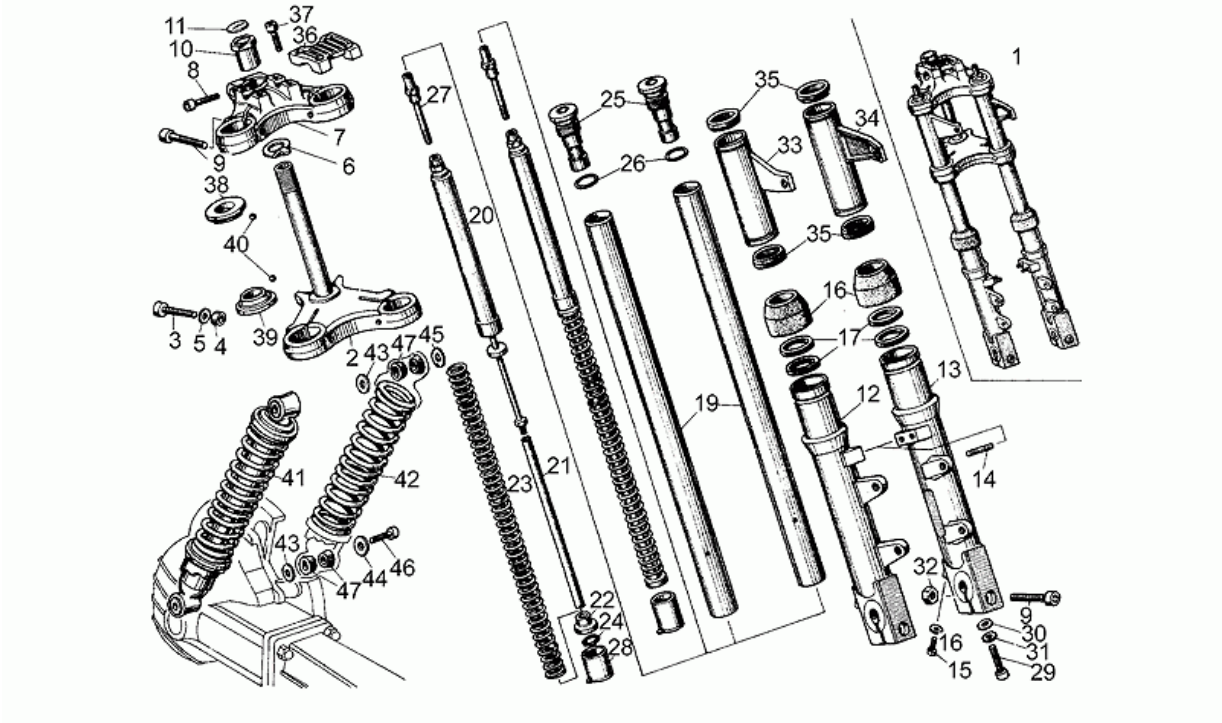

Pos.	Code	Description	Q.ty	Variants
1	GU19490305	Fourche Av.	1	
2	GU39494002	Plaque inf. fourche	1	
3	GU98620555	Vis	2	
4	GU91181110	Entretoise	2	
5	GU95004210	Rondelle 10,2x18x2	2	
6	GU62493200	Rondelle	1	
7	GU39493101	Plaque sup.	1	
8	GU98620435	Vis M8X35	1	
9	GU98620540	Vis M10X40	4	
10	GU14516600	Douille	1	
11	GU17517700	Petit couvercle	1	
12	GU195225001	Fourreau D	1	
13	GU195226001	Fourreau G	1	
14	GU96508021	Vis sans tête	4	
15	GU98620312	Bouchon vid.huile	2	
16	GU95100116	Rondelle 6,25x10x1,5	2	
17	GU90403144	Joint spi	4	
18	GU53524540	Pare-poussière	2	
19	GU39525401	Tige	2	
20	GU14526407	Amortisseur fourche	2	
21	GU53527840	Pompage	2	
22	GU53527940	Soucoupe porte-ressort	2	
23	GU19526600	Ressort fourche	2	
24	GU90271012	Bague seeger	2	
25	GU39504501	Bouchon	2	
26	GU90706202	Joint torique	2	
27	GU19504800	Goujon	2	
28	GU53527640	Rondelle	2	

Assembly	CHASSIS
Code	33.09
Description	Suspension avant/arriere
Revision	1

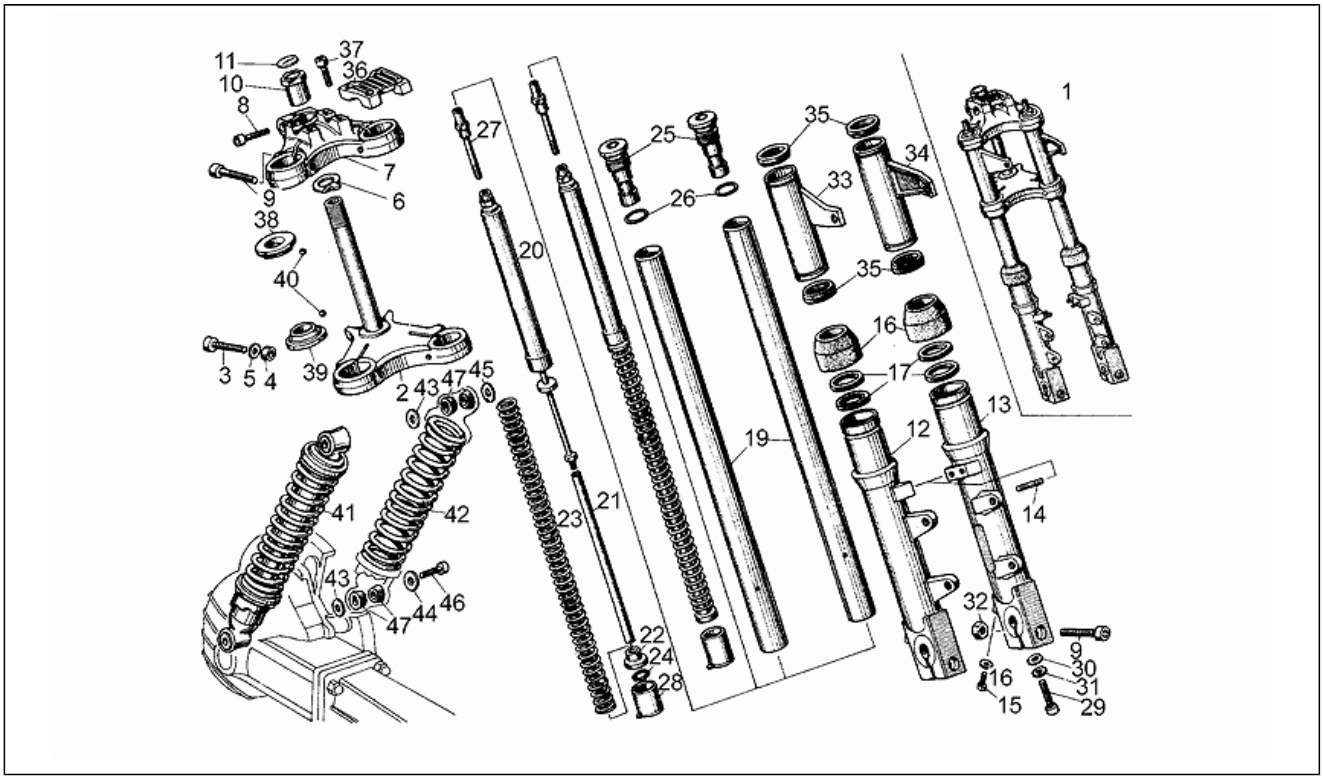

Pos.	Code	Description	Q.ty	Variants
29	GU98623430	Vis	2	
30	GU12154200	Joint 8,25x15x1	2	
31	GU95004208	Rondelle	2	
32	GU92602210	Ecrou	2	
33	GU194961001	Support phare AV D	1	
34	GU194962001	Support phare AV G	1	
35	GU39492701	Joint torique	4	
36	GU19500200	Cavalier guidon	1	
37	GU98830430	Vis	4	
38	GU61514940	Bouchon	1	
39	GU61515240	Piste direction	1	**Spécifications techniques:**See spare parts comm.n.002 of 2001[00201N]
40	GU92295704	Bille	44	
41	GU23999290	Amortisseur	2	
42	GU19552300	Ressort	2	
43	GU95004215	Rondelle plate	4	
44	GU95100255	Rondelle	2	
45	GU95000208	Rondelle	2	
46	GU98822416	Vis	4	
47	GU10551600	Bague	8	

PIAGGIO&C.s.p.a.

Assembly	CHASSIS
Code	33.10
Description	Chassis
Revision	1

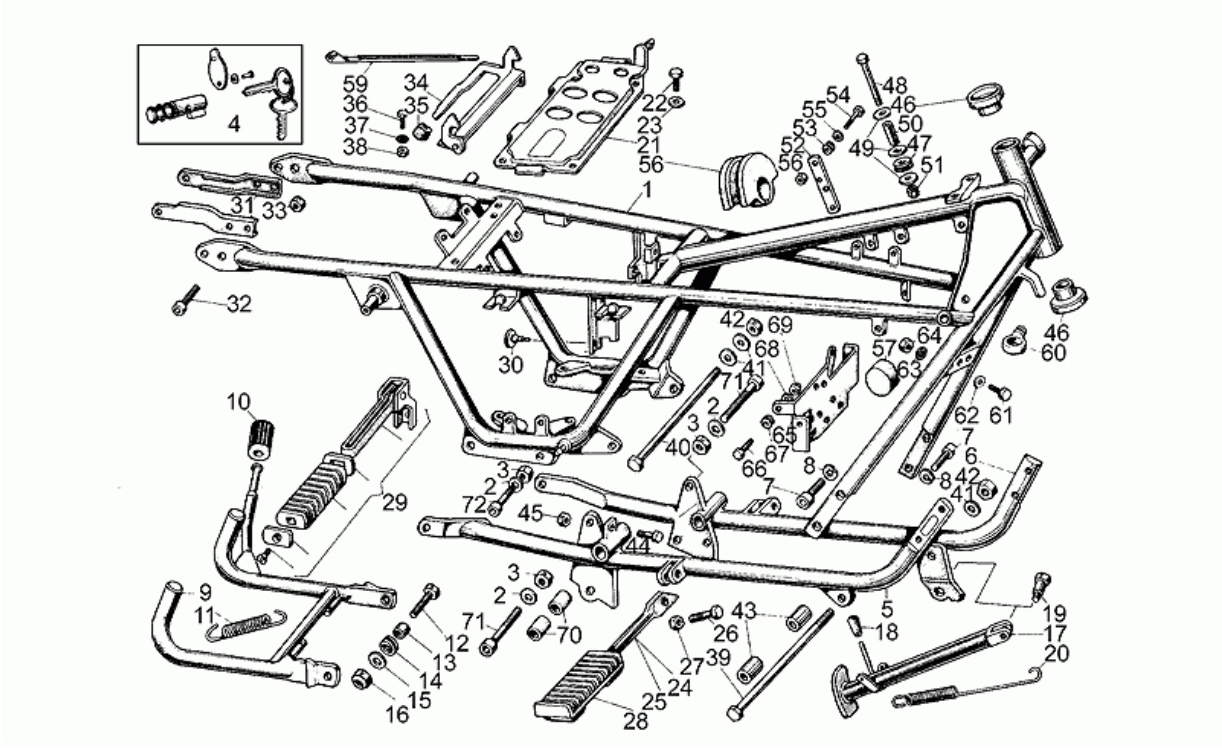

Pos.	Code	Description	Q.ty	Variants
1	GU19400100	Chassis	1	
2	GU95004210	Rondelle 10,2x18x2	4	
3	GU92602210	Ecrou	4	
4	GU19782520	Serrure	1	
5	GU19420300	Bras d.	1	
6	GU19422100	Bras g.	1	
7	GU98622522	Vis	4	
8	GU95120105	Rondelle	4	
9	GU19430305	Béquille centrale	1	
10	GU13432640	Pédale en caoutch.	1	
11	GU12434001	Ressort rappel béq.	2	
12	GU98054530	Vis	2	
13	GU91181114	Entretoise	2	
14	GU94322215	Ressort	1	
15	GU95000210	Rondelle	2	
16	GU92630510	Ecrou M10x1,5	2	
17	GU19432000	Béquille latérale	1	
18	GU19433000	Caoutchouc de ferm.	1	
19	GU99105129	Pivot	1	
20	GU19434000	Ressort	2	
21	GU19418200	Plaque	1	
22	GU98054418	Vis	4	
23	GU95004208	Rondelle	4	
24	GU39440700	Tuyau d.	1	
25	GU39441800	Tuyau g.	1	
26	GU98820430	Vis	2	
27	GU92602208	Ecrou M8X1,25	2	
28	GU39443200	Repose-pied AV	2	

Assembly	CHASSIS
Code	33.10
Description	Chassis
Revision	1

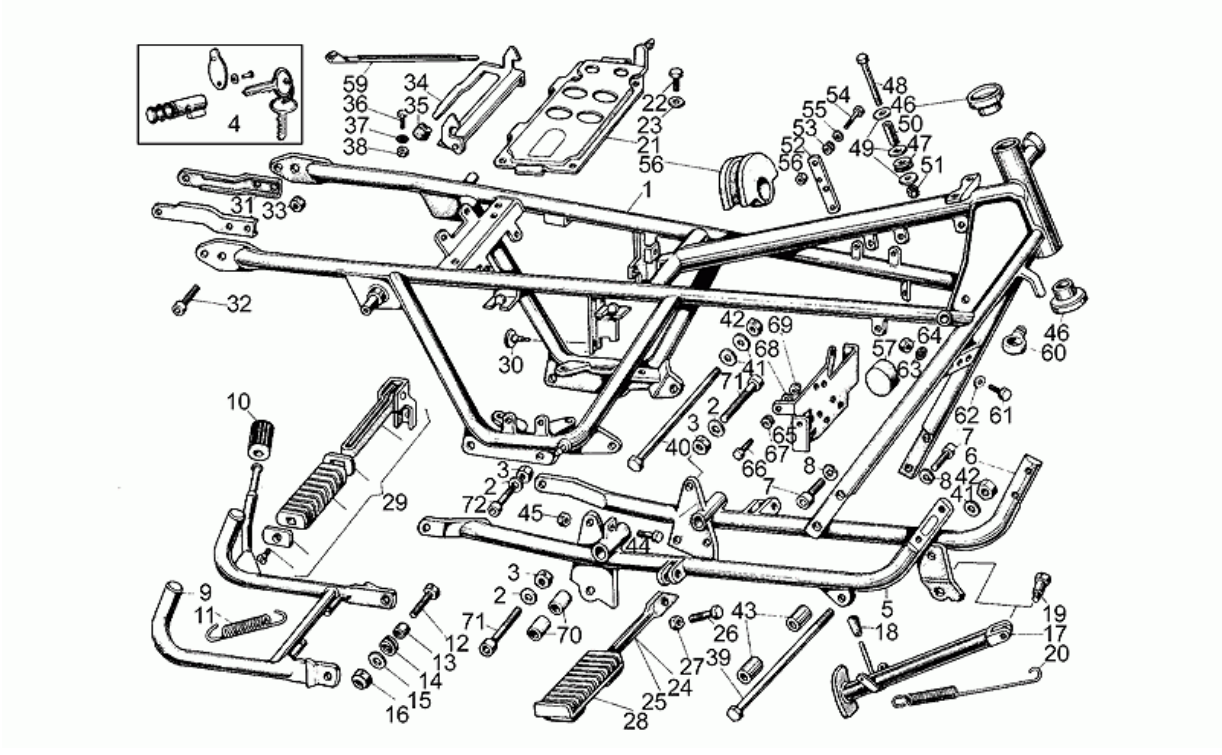

Pos.	Code	Description	Q.ty	Variants
29	GU61442300	R.pied AR	2	
30	GU19705900	Tampon	4	
31	GU19439100	Support g-boue AR	2	
32	GU98822418	Vis	4	**Spécifications techniques:**Version "V35"[V35]
32	GU98822420	Vis	2	**Spécifications techniques:**Version "V50"[V50]
33	GU92630508	Ecrou	4	
34	GU19462050	Crochet selle	1	
35	GU61462800	Caoutchouc	1	
36	GU98054312	Vis	2	
37	GU95021106	Rondelle évent.	2	
38	GU92602206	Ecrou	2	
39	GU53429500	Pivot M10x250	1	
40	GU98110199	Pivot M10x205	1	
41	GU95004210	Rondelle 10,2x18x2	3	
42	GU92602210	Ecrou	2	
43	GU19017000	Bague	2	
44	GU98054322	Vis M6X22	1	
45	GU92602206	Ecrou	1	
46	GU39515000	Bouchon	2	
47	GU91551085	Caoutchouc	2	
48	GU98052350	Vis	2	
49	GU95100139	Rondelle 6,5X17X1.5	8	
50	GU91180725	Entretoise	2	
51	GU92630106	Ecrou M6x1	2	
52	GU19716801	Bride	2	
53	GU91551085	Caoutchouc	2	
54	GU98052220	Vis	2	
55	GU95100059	Rondelle 5,25x14x1,5	2	

Assembly	CHASSIS
Code	33.10
Description	Chassis
Revision	1

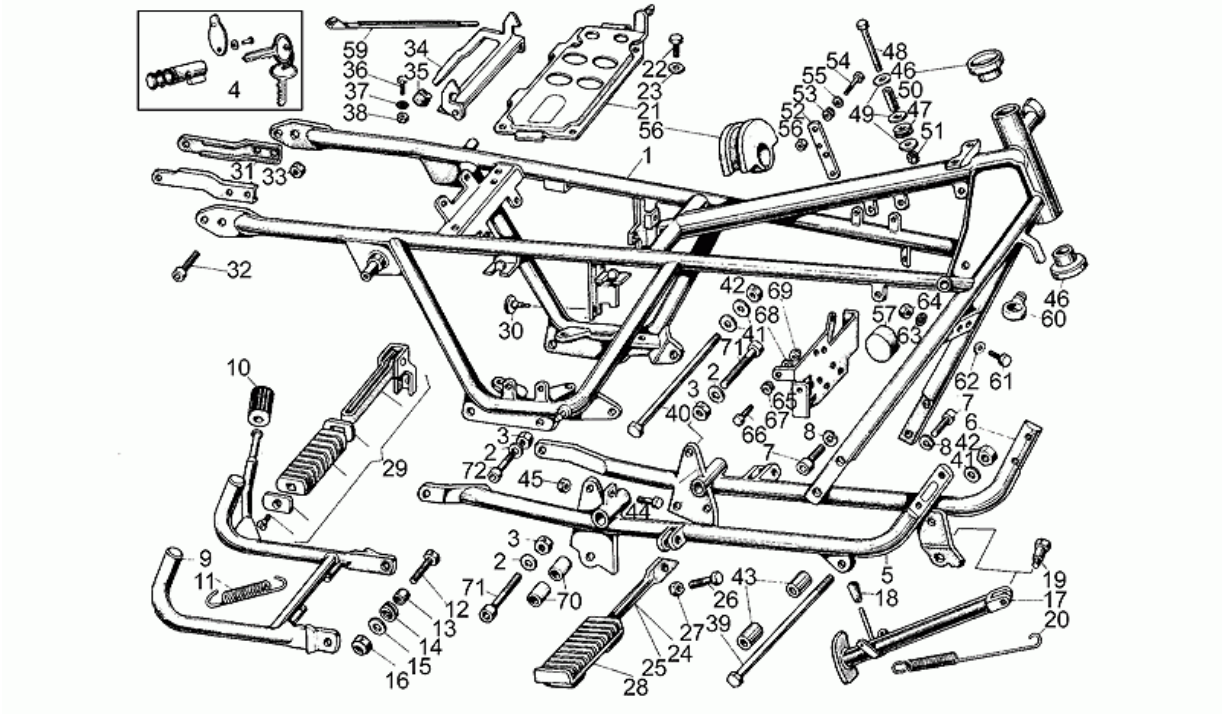

Pos.	Code	Description	Q.ty	Variants
56	GU92630105	Ecrou	2	
57	GU39103400	Tampon	2	
58	GU14107100	Tampon	1	
59	GU14609650	Collier 3,6x20,6	1	
60	GU19436500	Oeillet	2	
61	GU98822420	Vis	1	
62	GU95000208	Rondelle	1	
63	GU95021108	Rondelle élastique	1	
64	GU92602208	Ecrou M8X1,25	1	
65	GU19704100	Bride	1	
66	GU98052220	Vis	2	
67	GU91551085	Caoutchouc	2	
68	GU95100059	Rondelle 5,25x14x1,5	2	
69	GU92630105	Ecrou	2	
70	GU18252050	Bague 19 mm	4	
71	GU98052565	Vis	2	
72	GU98052555	Vis	2	

PIAGGIO&C.s.p.a.

Assembly	CHASSIS
Code	33.12
Description	Aspiration-échappement
Revision	1

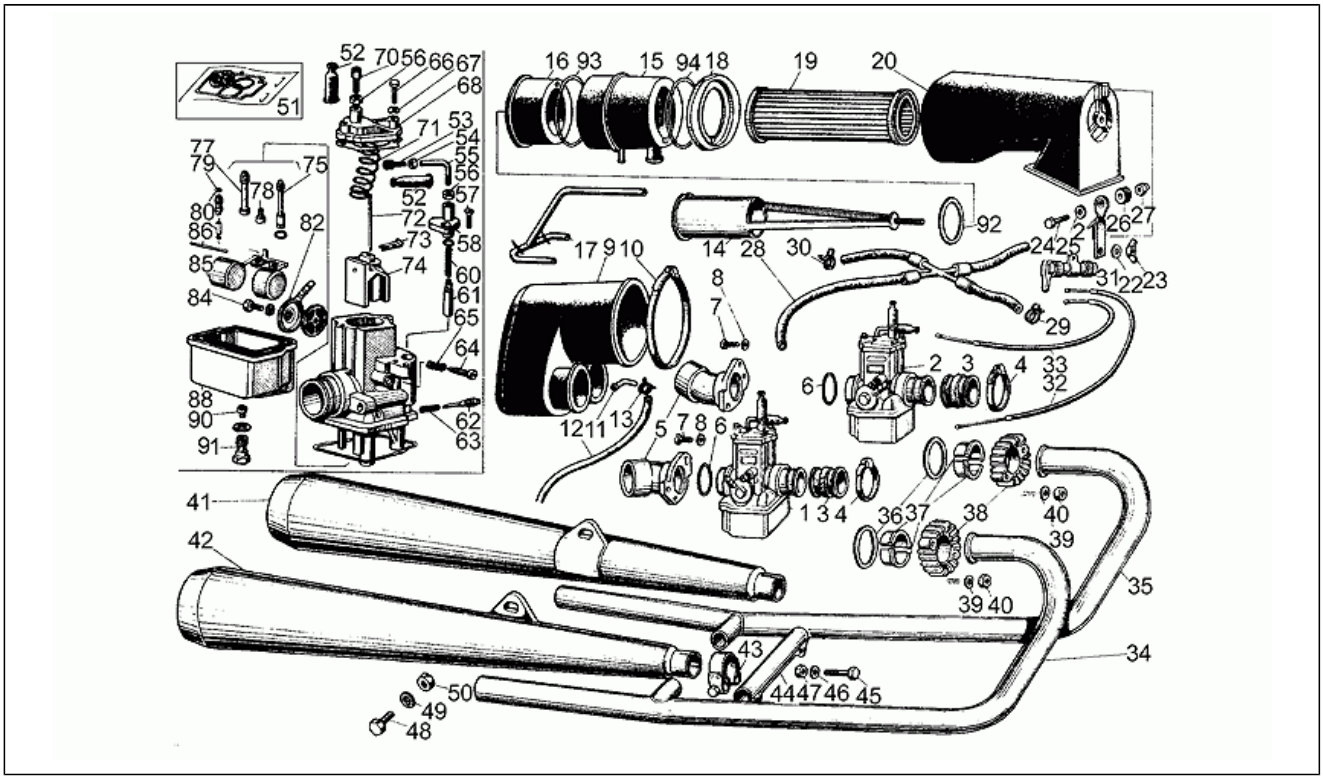

Pos.	Code	Description	Q.ty	Variants
1	GU19112600	Carburateur droit	1	**Pays:** Allemagne[D] **Spécifications techniques:**Version "V35"[V35]
1	GU19112610	Carburateur droit	1	**Spécifications techniques:**Version "V35"[V35]
1	GU19112650	Carburateur droit	1	**Spécifications techniques:**Version "V50"[V50]
2	GU19112601	Carburateur gauche	1	**Pays:** Allemagne[D] **Spécifications techniques:**Version "V35"[V35]
2	GU19112611	Carburateur gauche	1	**Spécifications techniques:**Version "V35"[V35]
2	GU19112651	Carburateur gauche	1	**Spécifications techniques:**Version "V50"[V50]
3	GU61114300	Manchon de carburateur	2	
4	GU93305025	Collier	4	
5	GU19114400	Collecteur	2	
6	GU90706315	Bague d'étanchéité	2	
7	GU98054214	Vis	4	
8	GU95004205	Rondelle	4	
9	GU19114300	Collecteur aspiration	1	
10	GU93305092	Collier	1	
11	GU17114650	Tuyau	1	
12	GU95985532	Tuyau reniflard radiateur	1	
13	GU14609650	Collier 3,6x20,6	1	
14	GU19155775	Support filtre	1	
15	GU19156700	Couvercle	1	
16	GU19156900	Manchon AR	1	
17	GU19156000	Tuyau reniflard radiateur	1	
18	GU17113450	Bague	1	
19	GU17113651	Filtre air	1	
20	GU17114050	Couvercle filtre	1	
21	GU19114100	Plaquette	1	
22	GU95100059	Rondelle 5,25x14x1,5	1	

Assembly	CHASSIS
Code	33.12
Description	Aspiration-échappement
Revision	1

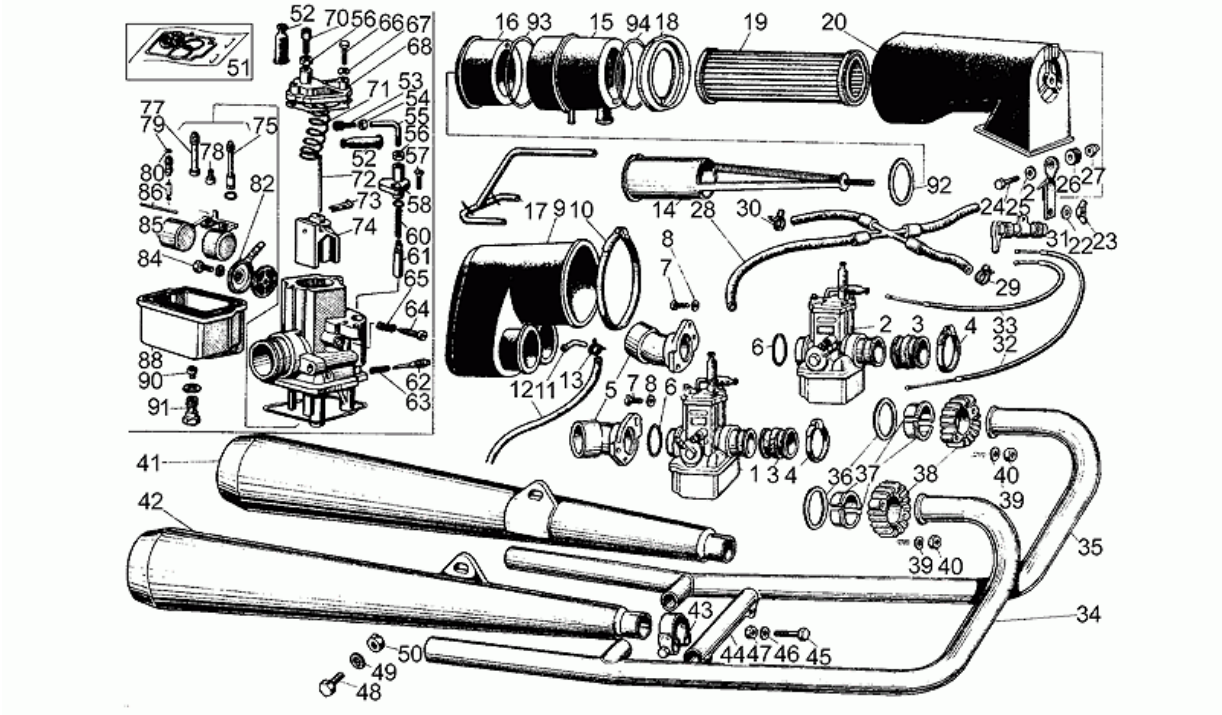

Pos.	Code	Description	Q.ty	Variants
23	GU92670305	Ecrou	1	
24	GU98052222	Vis	1	
25	GU95100059	Rondelle 5,25x14x1,5	1	
26	GU91551085	Caoutchouc	1	
27	GU92630105	Ecrou	1	
28	GU13934600	Pipette racc. tuyau essence	1	
29	GU61108400	Collier	2	
30	GU61108500	Collier D9	2	
31	GU23133100	Starter	1	
32	GU19133500	Câble starter	1	
33	GU19134000	Câble starter carb. G	1	
34	GU19120700	Collecteur échapp. D	1	
35	GU19120705	Collecteur échapp. G	1	
36	GU61025200	Joint échappement	2	
37	GU61025400	Entretoise	4	
38	GU61025100	Bague	2	
39	GU61013800	Rondelle spéciale	4	
40	GU92701062	Ecrou	4	
41	GU19122900	Silencieux G	1	
42	GU19123000	Silencieux D	1	
43	GU61126920	Collier	2	
44	GU19121100	Tuyau	1	
45	GU98052330	Vis	2	
46	GU95000206	Rondelle	2	
47	GU92602206	Ecrou	2	
48	GU98054522	Vis M10X22	2	
49	GU95021110	Rondelle évent.	2	
50	GU92602410	Ecrou	2	

Assembly	CHASSIS
Code	33.12
Description	Aspiration-échappement
Revision	1

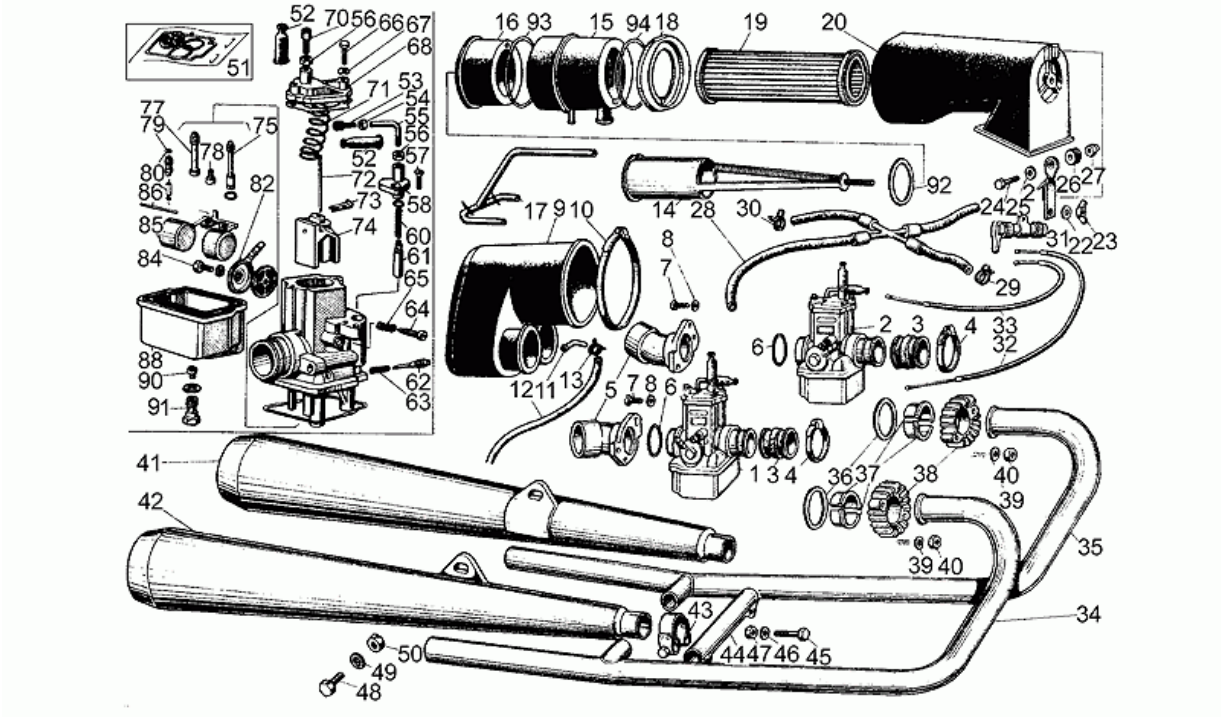

Pos.	Code	Description	Q.ty	Variants
51	GU39939900	Sachet joints	2	
52	GU13937000	Capuchon	4	
53	GU53937200	Vis tendeur de fil	2	
54	GU19938880	Ecrou	2	
55	GU49938900	Tuyau	2	
56	GU12937300	Ecrou	4	
57	GU13937900	Vis	2	
58	GU17937450	Couvercle dispositif dém.	2	
60	GU25937600	Ressort	2	
61	GU13937800	Soupape de démarrage	2	
62	GU13936200	Vis réglage minimum	2	
63	GU13936300	Ressort	2	
64	GU13936600	Vis réglage soupape gaz	2	
65	GU13936700	Ressort	2	
66	GU13932800	Vis	4	
67	GU13932900	Rondelle	4	
68	GU53935000	Couvercle soupape	2	
70	GU12937200	Vis tendeur de fil	2	
71	GU53937100	Ressort rappel soup.gaz	2	
72	GU19934900	Pointeau conique	2	
72	GU61934940	Pointeau conique	2	**Pays:** Allemagne[D] **Spécifications techniques:**Version "V35"[V35]
73	GU55938585	Agrafe pointeau conique	2	
74	GU61934800	Soupape gaz 40	2	
75	GU19936000	Jet démarrage 60	2	
77	GU19935500	Gicleur 260AH	2	
78	GU19935900	Gicleur minimum 40	2	
79	GU14931750	Joint	2	

Assembly	CHASSIS
Code	33.12
Description	Aspiration-échappement
Revision	1

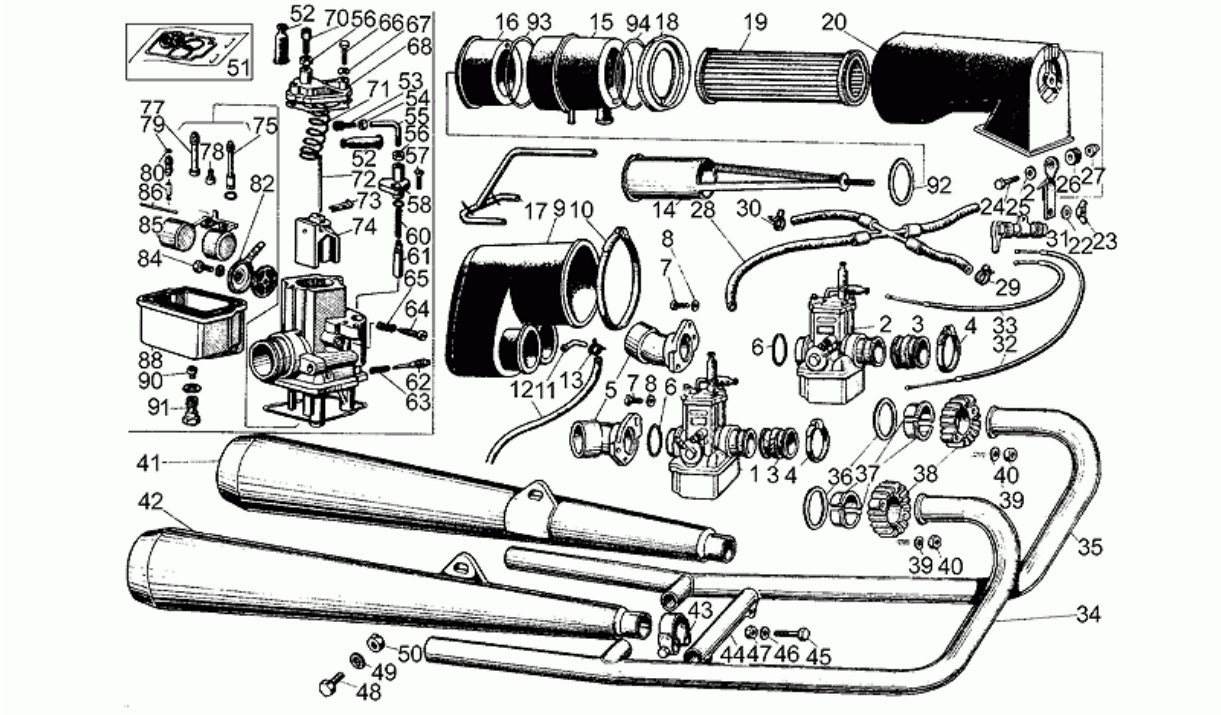

Pos.	Code	Description	Q.ty	Variants
80	GU19934600	Vanne pointeau	2	
82	GU13934600	Pipette racc. tuyau essence	2	
84	GU10934900	Vis fix.pipette	2	
85	GU61934300	Flotteur	2	
86	GU13933100	Axe flotteur	2	
88	GU10934400	Cuve	2	
90	GU19935700	Jet maximum 102	2	**Spécifications techniques:**Version "V35"[V35]
90	GU19935750	Jet maximum 105	1	**Spécifications techniques:**Version "V50"[V50]
90	GU39935701	Jet maximum 98	1	**Pays:** Allemagne[D] **Spécifications techniques:**Version "V35"[V35]
91	GU10933700	Bouchon avec OR	2	
92	GU19113900	Joint	1	
93	GU90706572	Bague d'étanchéité	1	
94	GU90706552	Bague d'étanchéité	1	

Assembly	MOTEUR
Code	34.11
Description	Arbre moteur
Revision	1

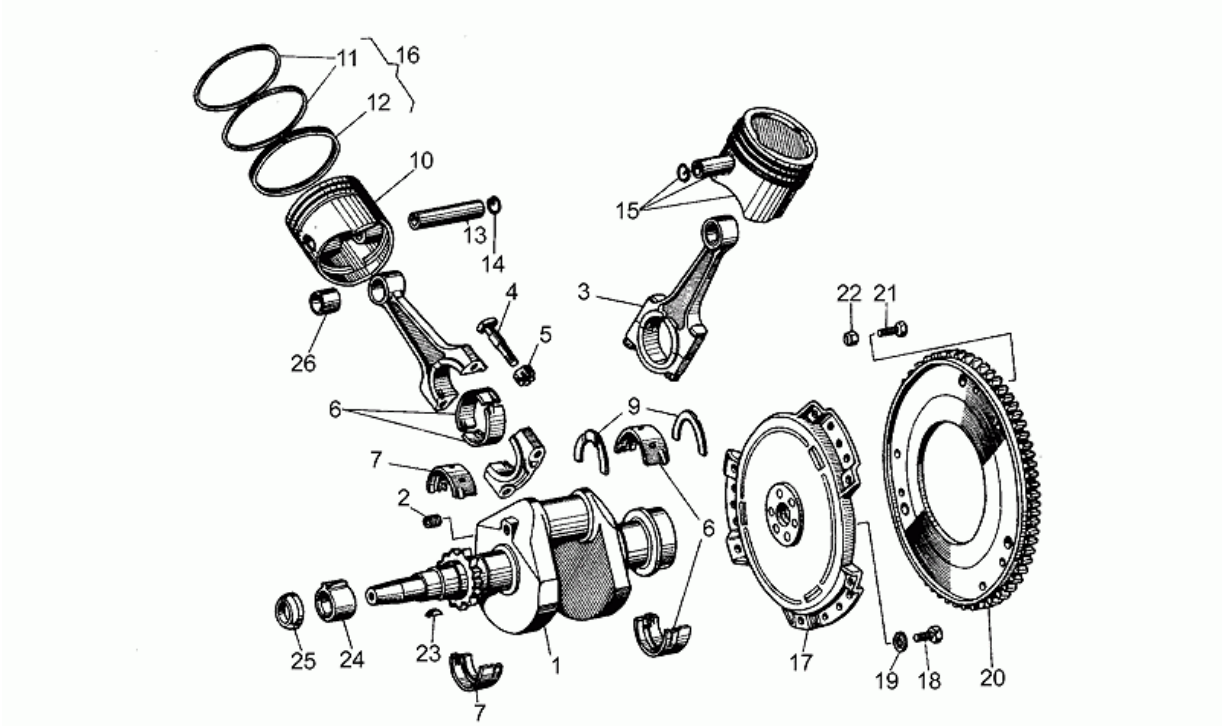

Pos.	Code	Description	Q.ty	Variants
1	GU19064100	Arbre moteur	1	**Spécifications techniques:**Version "V35"[V35]
1	GU19064150	Arbre moteur	1	**Spécifications techniques:**Version "V50"[V50]
2	GU19065400	Bouchon	1	
3	GU19061500	Bielle	2	
4	GU61062201	Vis bielle	4	
5	GU61062401	Ecrou	4	
6	GU61062010001	Roul.br. tête bielle	4	**Spécifications techniques:**See spare parts comm.n.005 of 1997[00597N], Tolerance standard[std]
6	GU61062012	Roul.br. tête bielle	4	
7	GU61065600	Roul. br. arbre moteur	2	**Spécifications techniques:**Tolerance standard[std]
7	GU61065602	C-case bushing insert drift	2	
8	GU19066500	C-case bushing insert drift	2	**Spécifications techniques:**Tolerance standard[std]
9	GU19066400	Demi-clavettes	2	**Spécifications techniques:**Tolerance standard[std]
10	GU19060400	Piston	2	**Spécifications techniques:**Version "V35"[V35]
10	GU19060450	Piston	2	**Spécifications techniques:**Version "V50"[V50]
11	GU19060700	Segment d'étanchéité	4	**Spécifications techniques:**Version "V35"[V35]
11	GU19060750	Segment	4	**Spécifications techniques:**Version "V50"[V50]
12	GU19061000	Segment d'étanchéité	2	**Spécifications techniques:**Version "V35"[V35]
12	GU19061050	Segm.racleur d'huile	2	**Spécifications techniques:**Version "V50"[V50]
13	GU19061235	Axe	2	**Spécifications techniques:**Version "V35"[V35]
13	GU19061250	Axe	2	**Spécifications techniques:**Version "V50"[V50]
14	GU61061300	Bague	4	
15	GU19060400	Piston	2	**Spécifications techniques:**Version "V35"[V35]
15	GU19060450	Piston	2	**Spécifications techniques:**Version "V50"[V50]
16	GU19060600	Ensemble de segments	1	**Spécifications techniques:**Version "V35"[V35]
16	GU19060650	Série segments	1	**Spécifications techniques:**Version "V50"[V50]
17	GU19080300	Cloche embrayage	1	
18	GU19067700	Vis	6	

Assembly	MOTEUR
Code	34.11
Description	Arbre moteur
Revision	1

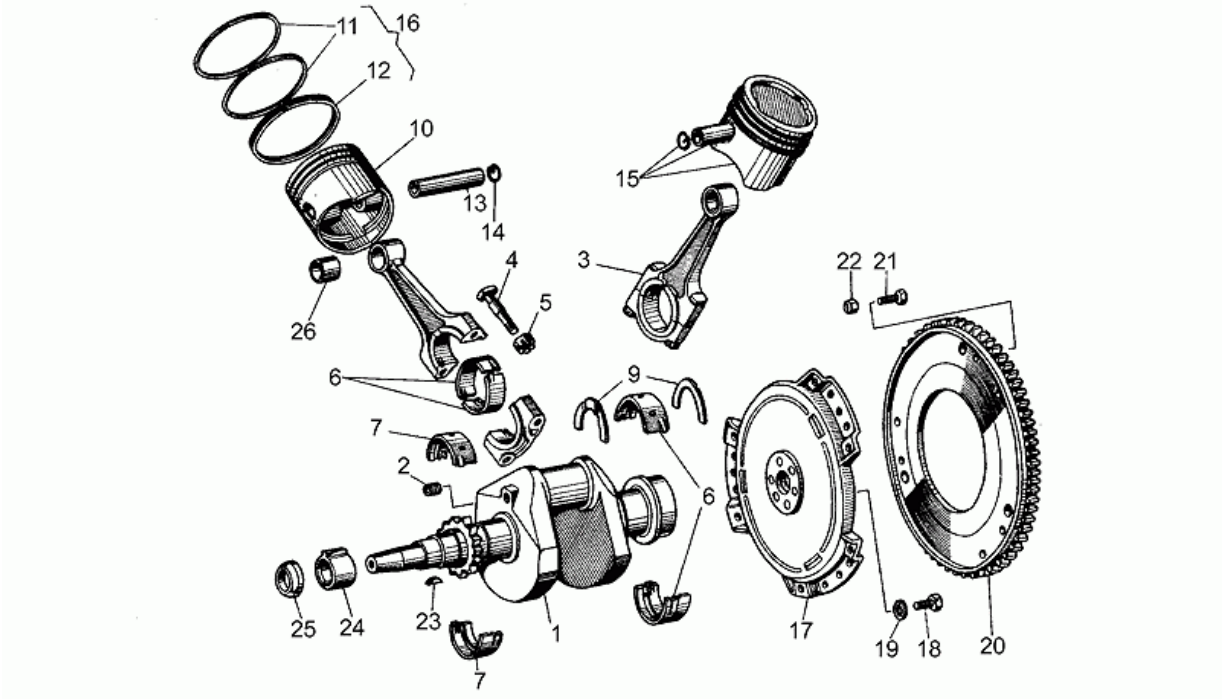

Pos.	Code	Description	Q.ty	Variants
19	GU14615901	Rondelle 8,4X13X0,8	6	
20	GU19067900	Couronne MOTOPLAT	1	
21	GU98054318	Vis	6	
22	GU92630106	Ecrou M6x1	6	
23	GU91701350	Clavette	1	
24	GU19721000	Came	1	
25	GU61066800	Caoutchouc	1	
26	GU19061810	Coussinet bronze	2	

Assembly	MOTEUR
Code	34.13
Description	Boîte de vitesses
Revision	1

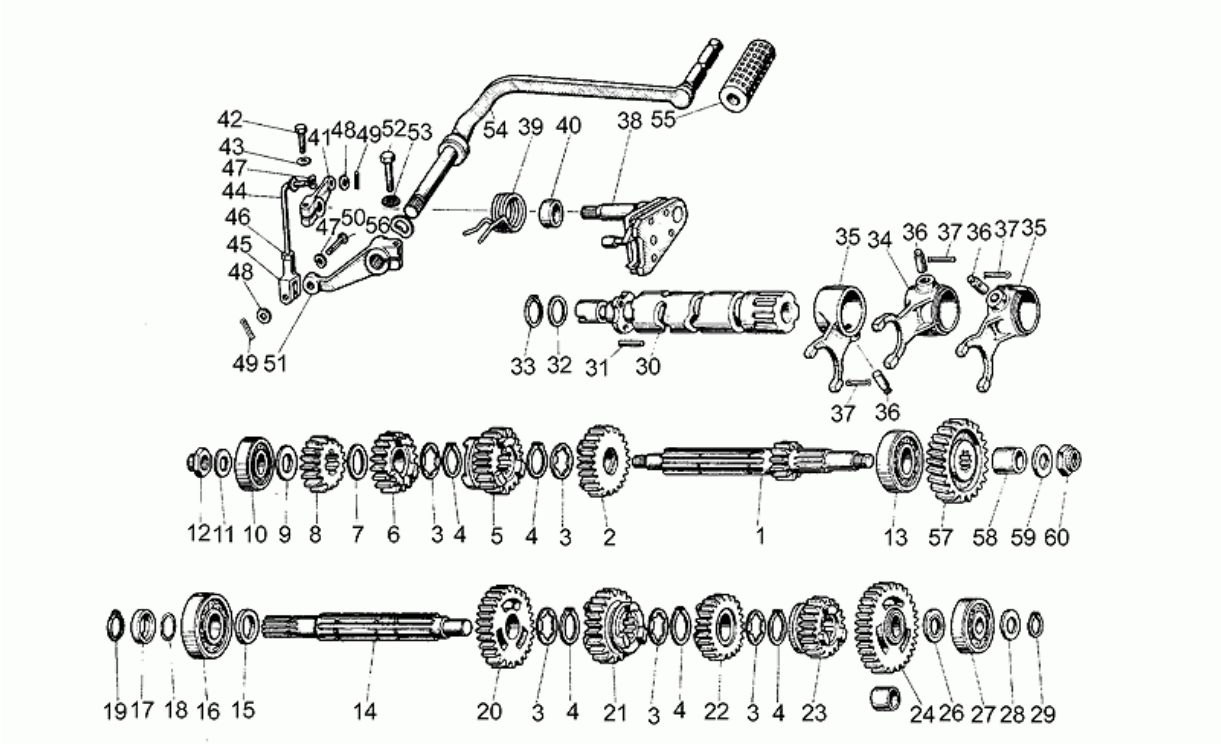

Pos.	Code	Description	Q.ty	Variants
1	GU19210501	Arbre primaire Z=11	1	
2	GU19212000	Engrenage conduttore 5a Z=22	1	
3	GU39215400	Rondelle	5	
4	GU90271122	Bague seeger	5	
5	GU19211800	Engrenage conduttore 5a Z=22	1	
6	GU19211400	Engrenage conduttore 3a Z=18	1	
7	GU19214600	Rondelle éventail	1	
8	GU19211300	Engrenage conduttore 2a Z=15	1	
9	GU43070940	Rondelle	1	
10	GU92201415	Roulement à billes	1	
11	GU39238100	Rondelle d'appui	1	
12	GU10054100	Ecrou	1	
13	GU92201220	Roulement 20X47X14	1	
14	GU19213600	Arbre secondaire	1	
15	GU19212900	Entretoise	1	
16	GU92201220	Roulement 20X47X14	1	
17	GU19213700	Entretoise	1	
18	GU90706188	Bague d'étanchéité 18,77X1,78	1	
19	GU90271121	Bague seeger	1	
20	GU19214501	Engrenage	1	
21	GU19214800	Engrenage condotto 3a Z=23	1	
22	GU19215100	Engrenage condotto 4a Z=23	1	
23	GU19215200	Engrenage condotto 5a Z=20	1	
24	GU19214001	Engrenage	1	
26	GU43070940	Rondelle	1	
27	GU92201415	Roulement à billes	1	
28	GU39239300	Rondelle éventail	1	
29	GU90271115	Bague seeger	1	

Assembly	MOTEUR
Code	34.13
Description	Boîte de vitesses
Revision	1

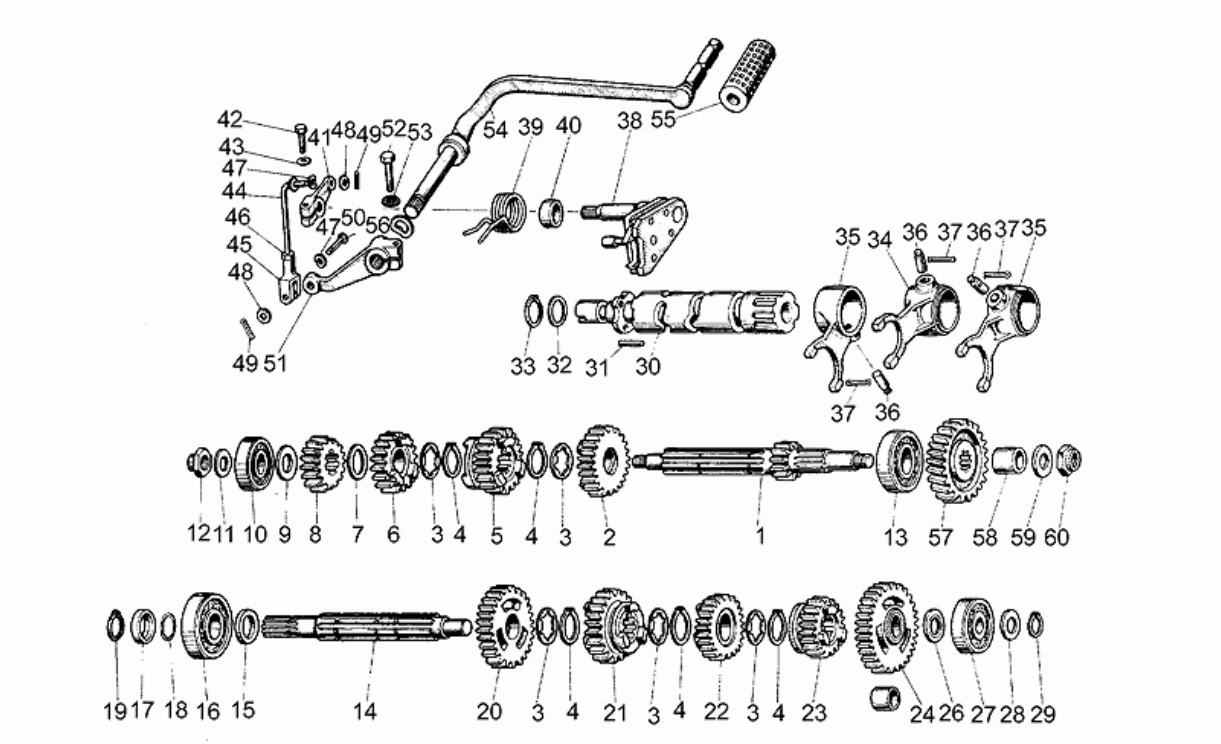

Pos.	Code	Description	Q.ty	Variants
30	GU19234400	Desmodromique	1	
31	GU19234600	Tige	4	
32	GU19355300	Cale 1 mm	1	
33	GU90271020	Anneau élastique	1	
34	GU39231270	Fourchette AP	1	
35	GU39231070	Fourchette AS	2	
36	GU19235220	Rouleau	3	
37	GU95401320	Goupille	3	
38	GU20999520	Kit présélecteur	1	**Spécifications techniques:**See spare parts comm.n.013 of 1997[01397N]
39	GU28238261	Ressort	1	**Spécifications techniques:**See spare parts comm.n.013 of 1997[01397N]
39	GU61238200	Ressort	1	
40	GU20208520	Entretoise	1	**Spécifications techniques:**See spare parts comm.n.013 of 1997[01397N]
40	GU91182010	Bague	1	
41	GU19258220	Levier de commande	1	
42	GU98052325	Vis	1	
43	GU95021106	Rondelle évent.	1	
44	GU19257800	Tige renvoi pédale b.vit.	1	
45	GU12626800	Fourchette	1	
46	GU92602206	Ecrou	1	
47	GU95129110	Rondelle	2	
48	GU95004206	Rondelle 6,15x11x0,8	1	
49	GU95500222	Goupille	2	
50	GU95770265	Goupille	1	
51	GU19256900	Levier	1	
52	GU98052325	Vis	1	
53	GU95021106	Rondelle évent.	1	

Assembly	MOTEUR
Code	34.13
Description	Boîte de vitesses
Revision	1

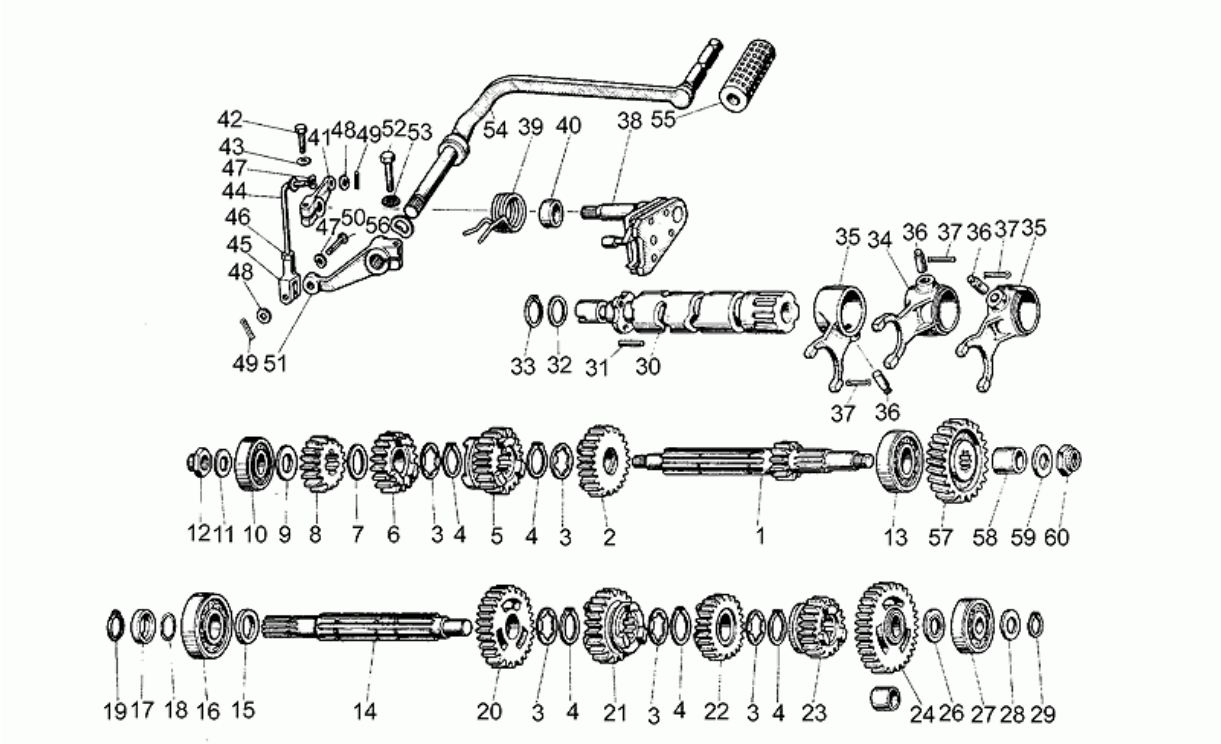

Pos.	Code	Description	Q.ty	Variants
54	GU19250900	Levier commande vitesses cpl.	1	
55	GU14251001	Caoutchouc	1	
56	GU95129260	Rondelle élastique	1	
57	GU19211101	Engrenage rinvio AP Z=24	1	**Spécifications techniques:**Version "V35"[V35]
57	GU19211106	Engrenage rinvio AP Z=25	1	**Pays:** Allemagne[D] **Spécifications techniques:**Version "V35"[V35]
57	GU19211151	Engrenage rinvio AP Z=23	1	**Spécifications techniques:**Version "V50"[V50]
58	GU19266700	Bague	1	
59	GU39238100	Rondelle d'appui	1	
60	GU10054100	Ecrou	1	

Assembly	MOTEUR
Code	34.14
Description	Carter moteur
Revision	1

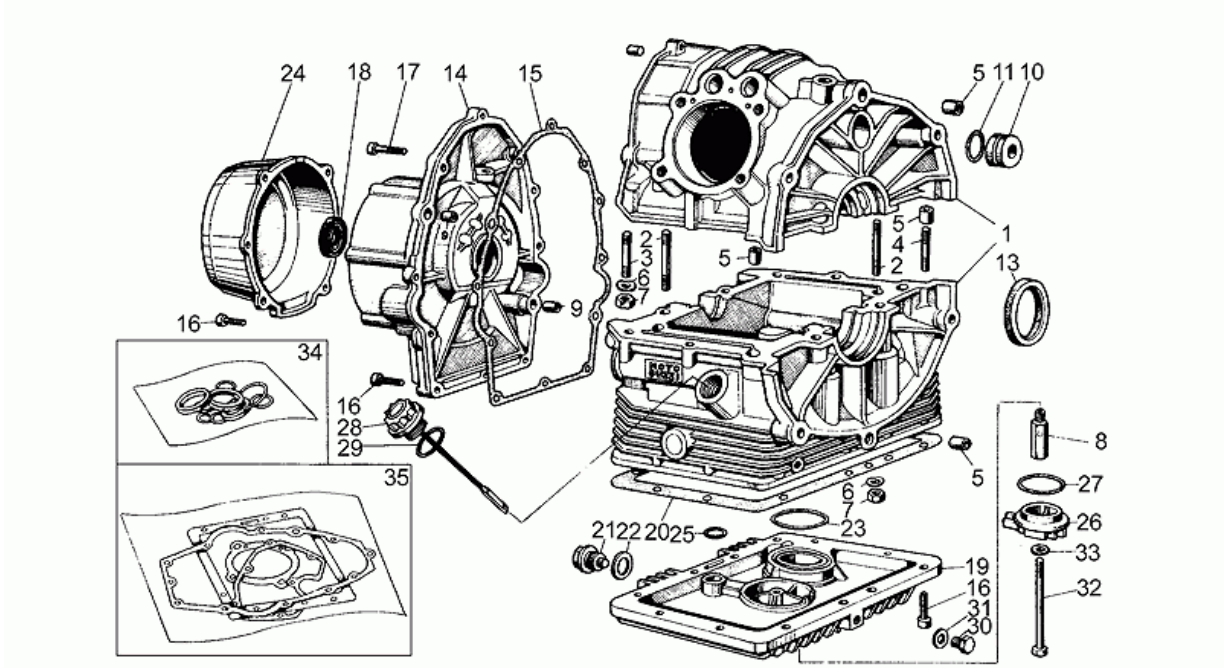

Pos.	Code	Description	Q.ty	Variants
1	GU19000100	Carter moteur	1	
2	GU96451455	Vis sans tête	4	
3	GU96451430	Vis sans tête	4	
4	GU96451435	Vis sans tête	2	
5	GU61002000	Grain de référence	4	
6	GU61270300	Rondelle élastique 8x15x0,3	10	
7	GU92602208	Ecrou M8X1,25	10	
8	GU19003800	Raccord	1	
9	GU61002100	Grain de référence	2	
10	GU19016301	Bouchon	1	
11	GU90706252	Joint	1	
13	GU90405367	Bague d'étanchéité	1	
14	GU19001400	Couvercle distribution	1	
15	GU19001200	Joint	1	
16	GU98622325	Vis M6X25	26	
17	GU98620330	Vis M6X30	2	
18	GU90402840	Bague d'étanchéité 28x38x7	1	
19	GU19003502	Coupe huile moteur	1	
20	GU19003600	Joint carter huile	1	
21	GU95980214	Bouchon niveau huile	1	
22	GU10528900	Garniture	1	
23	GU90706523	Joint	1	
24	GU18001650	Couvercle	1	
25	GU90706170	Joint torique 17,13x2,62	1	
26	GU19003400	Couvercle brut	1	
27	GU90706444	Joint torique	1	
28	GU19004900	Bouchon alimentation huile	1	
29	GU90706282	Bague d'étanchéité	1	

Assembly	MOTEUR
Code	34.14
Description	Carter moteur
Revision	1

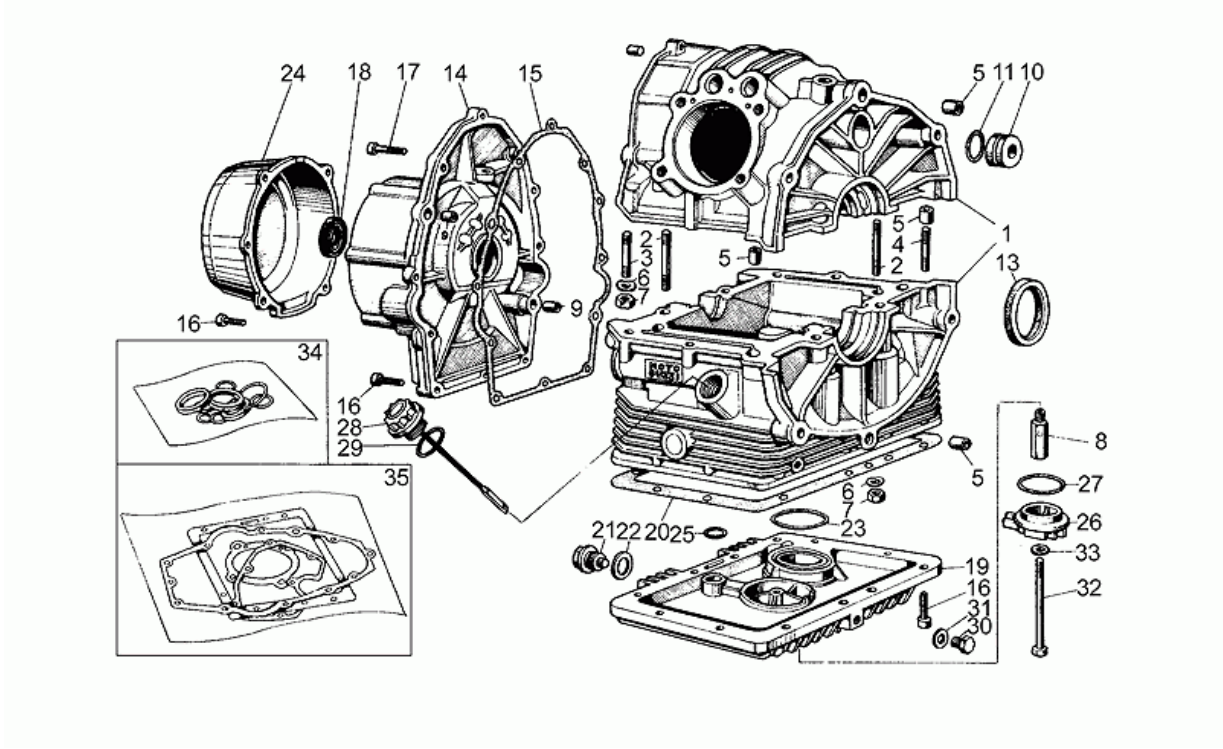

Pos.	Code	Description	Q.ty	Variants
30	GU12003702	Bouchon vid.huile	1	
31	GU95100709	Joint 20,1x28x2	1	
32	GU98052490	Vis m8x90	1	
33	GU12154200	Joint 8,25x15x1	1	
34	GU19999501	Kit moteur spi	1	
35	GU19999001	Joints moteur-série	1	**Spécifications techniques:**Version "V35"[V35]
35	GU19999051	Joints moteur-série	1	**Spécifications techniques:**Version "V50"[V50]

Assembly	MOTEUR
Code	34.15
Description	Tête cylindre
Revision	1

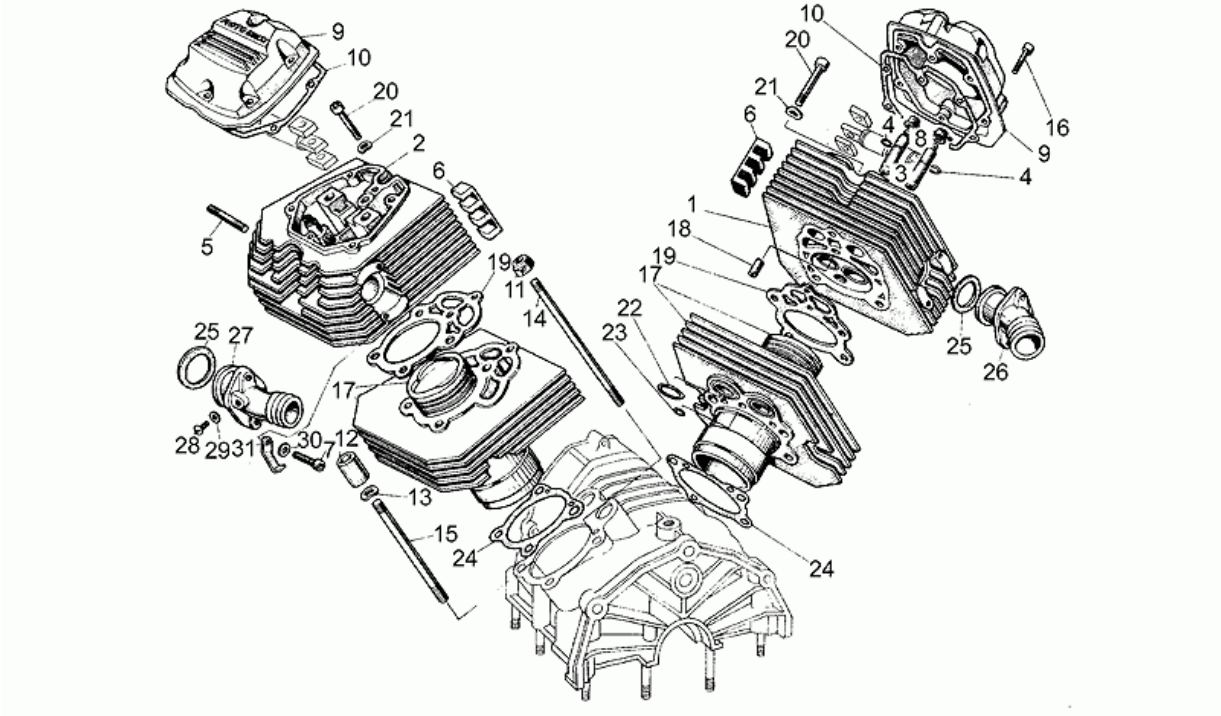

Pos.	Code	Description	Q.ty	Variants
1	GU19022100	Tête cylindre D	1	**Pays:** Allemagne[D] **Spécifications techniques:**Version "V35"[V35]
1	GU19022110	Tête cylindre G	1	**Spécifications techniques:**Version "V35"[V35]
1	GU19022150	Tête cylindre D	1	**Spécifications techniques:**Version "V50"[V50]
2	GU19022200	Tête cylindre G	1	**Pays:** Allemagne[D] **Spécifications techniques:**Version "V35"[V35]
2	GU19022210	Tête cylindre G	1	**Spécifications techniques:**Version "V50"[V50]
2	GU19022250	Tête cylindre G	1	**Spécifications techniques:**Version "V50"[V50]
3	GU61036801	Guide soupape	4	
4	GU90353009	Anneau élastique	4	
5	GU96506042	Vis sans tête	4	
6	GU19025300	Plaquette antivibratile	4	
7	GU98822325	Vis	4	
8	GU19037820	Joint spi	4	
9	GU19023501	Couvercle soupapes	2	
10	GU19023700	Joint	2	
11	GU92603010	Ecrou M10X1,5	4	
12	GU13021900	Ecrou colonne	4	
13	GU95129180	Rondelle 10,5X18X0,8	4	
14	GU96510182	Vis sans tête	4	
15	GU96510125	Vis sans tête 125 mm	4	
16	GU98622325	Vis M6X25	12	
17	GU19060101	Cylindre cpl.	2	**Spécifications techniques:**Version "V35"[V35]
17	GU19060151	Cylindre cpl.	2	**Spécifications techniques:**Version "V50"[V50]
18	GU61002100	Grain de référence	2	
19	GU19022000	Joint tête cylindre	2	**Spécifications techniques:**Version "V35"[V35]
19	GU19022050	Joint tête cylindre	2	**Spécifications techniques:**Version "V50"[V50]
20	GU98620445	Vis M8X45	2	

Assembly	MOTEUR
Code	34.15
Description	Tête cylindre
Revision	1

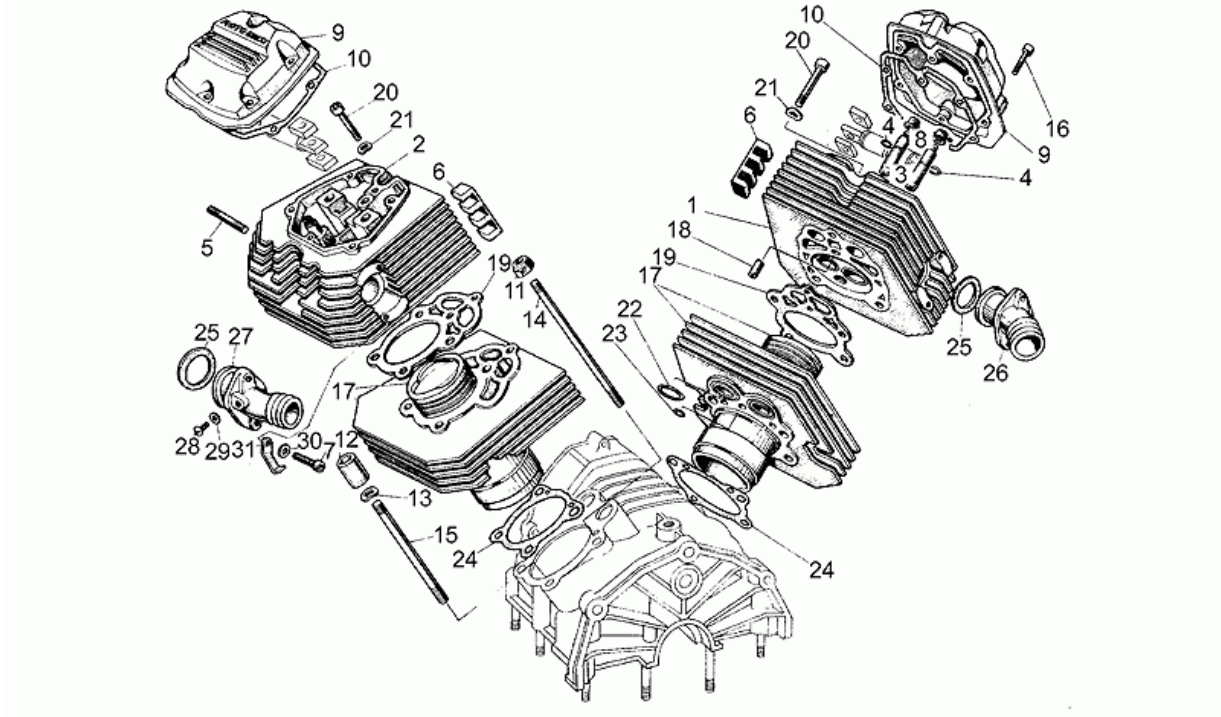

Pos.	Code	Description	Q.ty	Variants
21	GU61270300	Rondelle élastique 8x15x0,3	2	
22	GU90706252	Joint	4	
23	GU61027200	Joint torique	2	
24	GU19020800	Joint base cylindre	2	
25	GU19115500	Joint	2	
26	GU19115000	Collecteur aspiration dte	1	**Pays:** Allemagne[D] **Spécifications techniques:**Version "V35"[V35]
26	GU19115050	Collecteur aspiration dte	1	
27	GU19115001	Collecteur aspiration gche	1	**Pays:** Allemagne[D] **Spécifications techniques:**Version "V35"[V35]
27	GU19115051	Collecteur aspiration gche	1	
28	GU98310610	Vis	2	
29	GU95100116	Rondelle 6,25x10x1,5	2	
30	GU61013800	Rondelle spéciale	2	
31	GU19718000	Collier	2	

Assembly	MOTEUR
Code	34.16
Description	Distribution
Revision	1

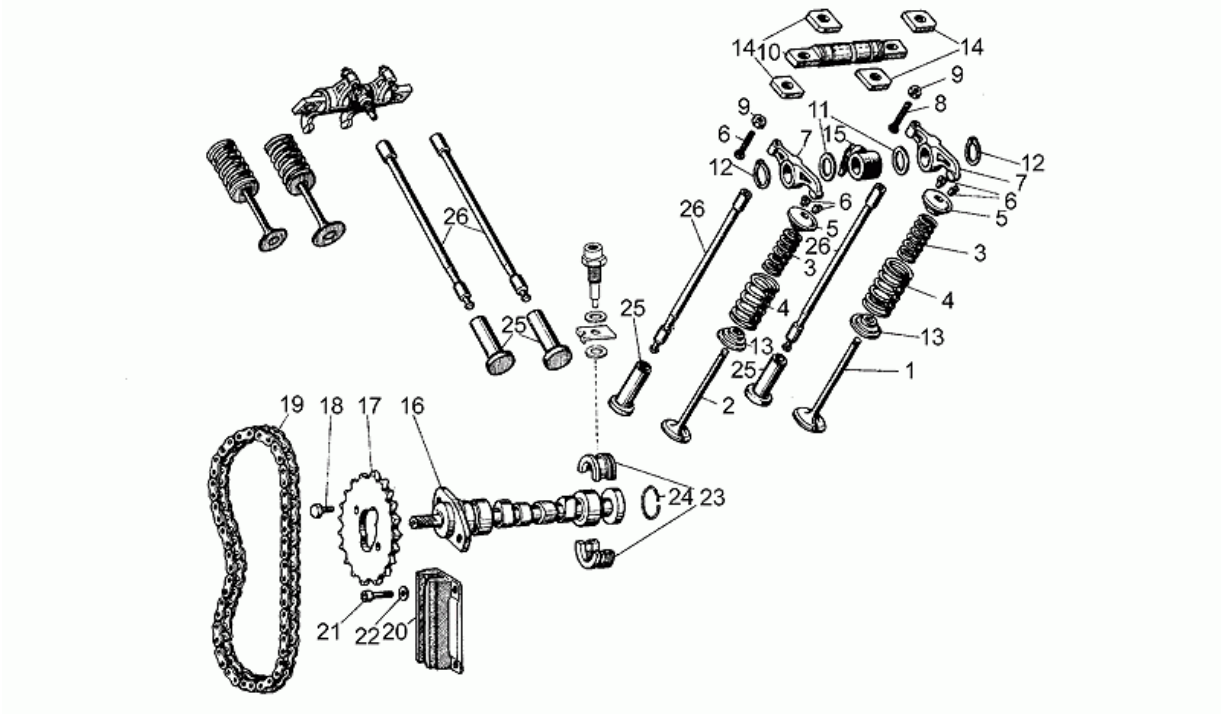

Pos.	Code	Description	Q.ty	Variants
1	GU19036000	Soupape d'admission	2	**Pays:** Allemagne[D] **Spécifications techniques:**Version "V35"[V35]
1	GU19036010	Soupape d'admission	2	**Spécifications techniques:**Version "V35"[V35]
1	GU19036050	Soupape d'admission	2	**Spécifications techniques:**Version "V50"[V50]
2	GU19036100	Soupape d'échappement	2	**Pays:** Allemagne[D] **Spécifications techniques:**Version "V35"[V35]
2	GU23036100	Soupape d'échappement	2	
3	GU61037600	Ressort	4	
4	GU61037500	Ressort	4	
5	GU61038000	Coupelle supérieur	4	
6	GU61038100	Demi-clavette	8	
7	GU19030500	Culbuteur	4	
8	GU19034000	Vis	4	
9	GU92602406	Ecrou M6x1	4	
10	GU19032000	Axe culbuteur	2	
11	GU19032300	Rondelle d'appui	4	
12	GU90271018	Bague seeger	4	
13	GU61037000	Coupelle inférieure	4	
14	GU19032900	Entretoise	8	
15	GU19027500	Manchon	2	
16	GU19053301	Arbre à cames	1	
17	GU19054500	Engrenage	1	
18	GU61054900	Boulon	2	
19	GU19058000	Chaîne de distribution	1	
20	GU19058400	Guide-chaîne distr.	1	
21	GU98622316	Vis M6X16	2	
22	GU95004206	Rondelle 6,15x11x0,8	2	
23	GU19055700	Secteur	2	

Assembly	MOTEUR
Code	34.16
Description	Distribution
Revision	1

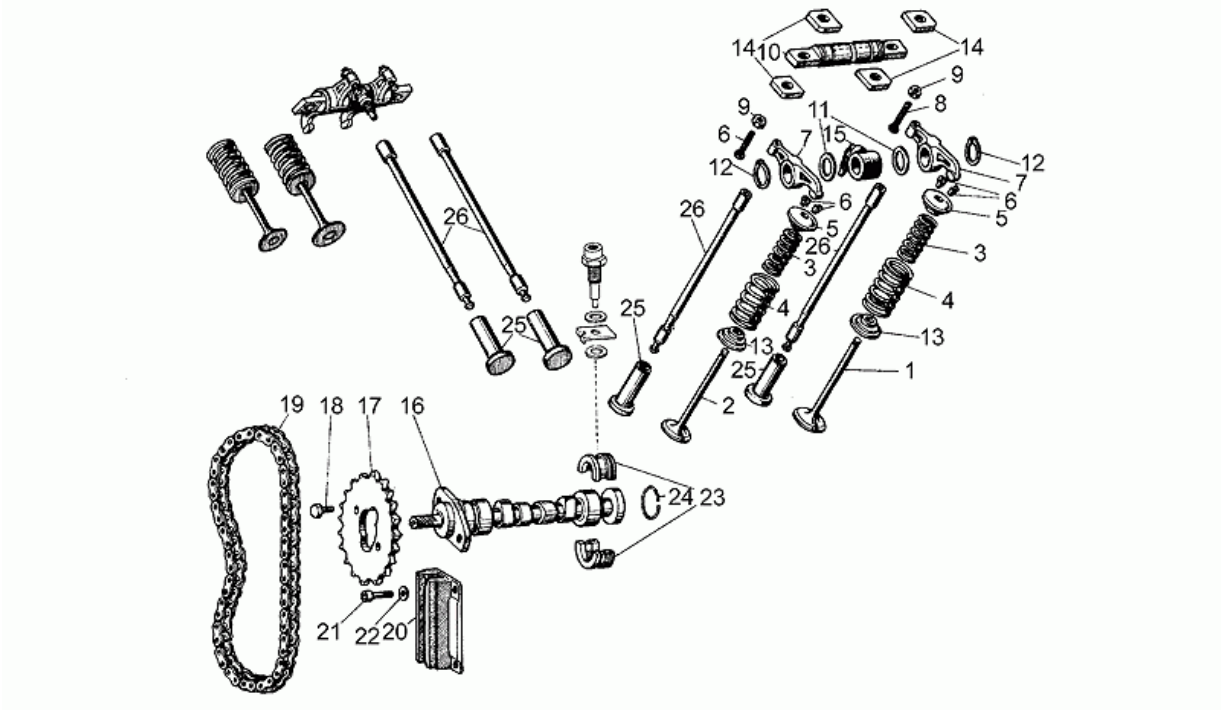

Pos.	Code	Description	Q.ty	Variants
24	GU90353029	Anneau élastique	1	
25	GU19045861	Poussoir	4	
26	GU19045001	Culbuteur axe	4	

PIAGGIO&C.s.p.a.

Assembly	MOTEUR
Code	34.17
Description	Embrayage
Revision	1

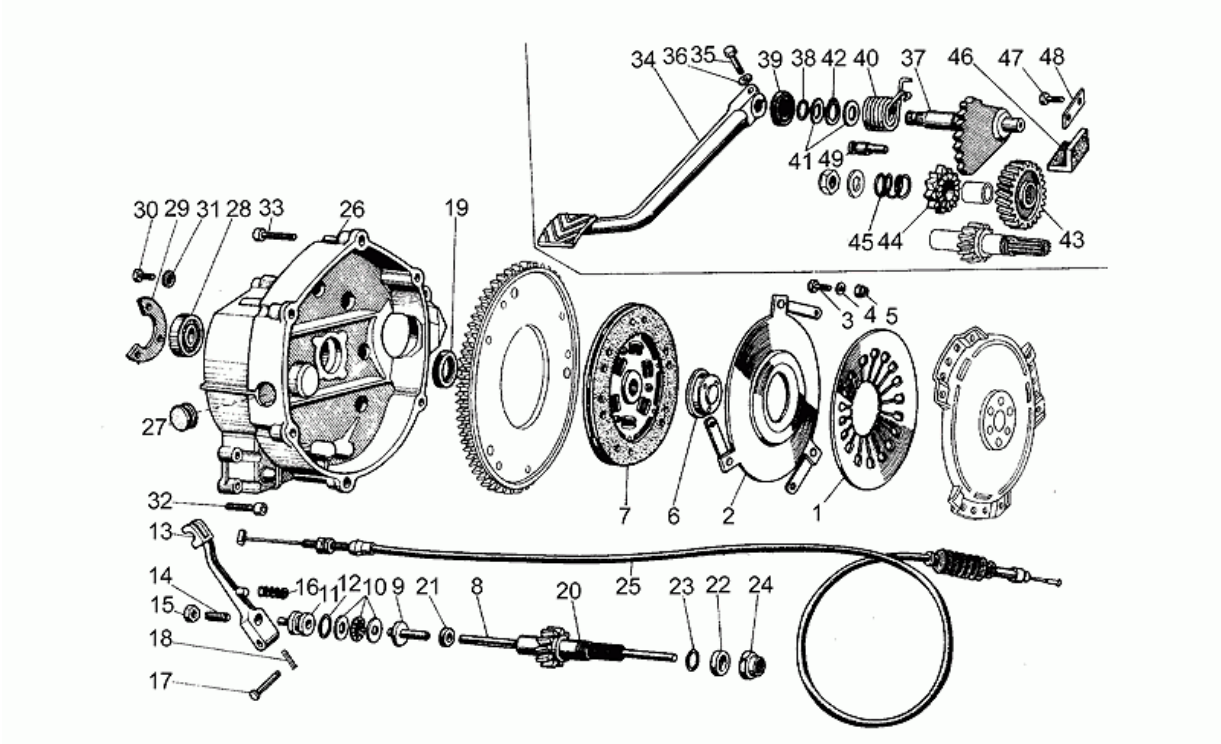

Pos.	Code	Description	Q.ty	Variants
1	GU19084100	Ressort à godet	1	
2	GU19082501	Disque de poussée	1	
3	GU98054214	Vis	3	
4	GU95004205	Rondelle	3	
5	GU92630105	Ecrou	3	
6	GU19083401	Rondelle	1	
7	GU27084420	Disque embrayage mené	1	
8	GU20085720	Tige	1	
9	GU14086000	Corps intérieur	1	
10	GU12087001	Palier poussée	1	
11	GU14086100	Corps extérieur	1	
12	GU90706170	Joint torique 17,13x2,62	1	
13	GU14090201	Débrayage	1	
14	GU14090400	Vis embrayage	1	
15	GU92602508	Ecrou M8X1	1	
16	GU94321105	Retour levier démarrage	1	
17	GU95780271	Goupille 7x39	1	
18	GU95500222	Goupille	1	
19	GU90402736	Joint spi	1	
20	GU19210700	Arbre transmission Z=13	1	**Spécifications techniques:**Version "V35"[V35]
20	GU19210750	Arbre transmission Z=14	1	**Spécifications techniques:**Version "V50"[V50]
21	GU90400616	Bague d'étanchéité 6x16x7	1	
22	GU19213700	Entretoise	1	
23	GU90706188	Bague d'étanchéité 18,77X1,78	1	
24	GU19356700	Ecrou	1	
25	GU19093052	Câble embrayage	1	
26	GU19200401	Cloche embrayage	1	
27	GU93180220	Bouchon	1	

Assembly	MOTEUR
Code	34.17
Description	Embrayage
Revision	1

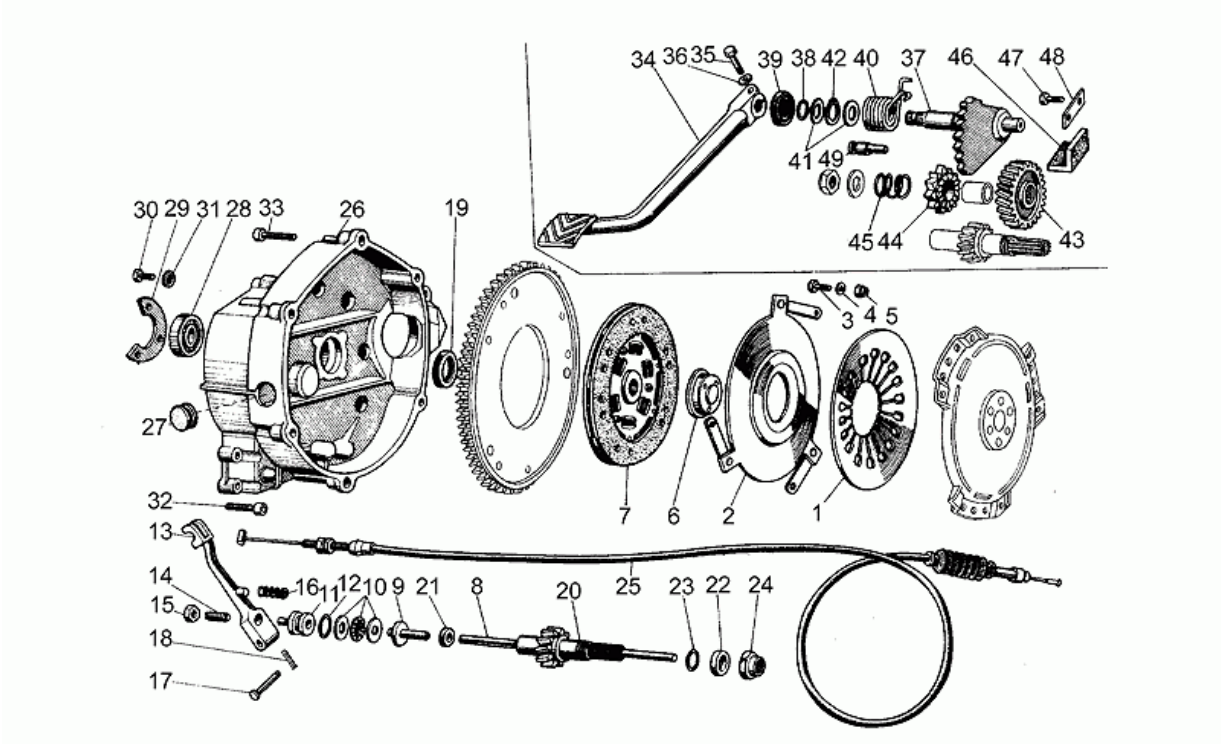

Pos.	Code	Description	Q.ty	Variants
28	GU92201120	Roulement à billes 20x42x12	1	
29	GU19203400	Pl.support paliers	1	
30	GU98054314	Vis	3	
31	GU14217901	Rondelle 6,4x10x0,7	3	
32	GU98620330	Vis M6X30	11	
33	GU98620435	Vis M8X35	6	
34	GU19260400	Levier démarrage	1	
35	GU98052430	Vis M8x30	1	
36	GU95004208	Rondelle	1	
37	GU19264000	Arbre démarrage	1	
38	GU90706188	Bague d'étanchéité 18,77X1,78	1	
39	GU90401832	Joint spi	1	
40	GU61265700	Ressort démarrage	1	
41	GU19032300	Rondelle d'appui	2	
42	GU90271018	Bague seeger	1	
43	GU19211105	Engrenage rinvio Z=23	1	**Spécifications techniques:**Version "V35"[V35]
43	GU19211150	Engrenage rinvio Z=25	1	**Spécifications techniques:**Version "V50"[V50]
44	GU19266601	Engrenage	1	
45	GU19266200	Ressort	1	
46	GU19263300	Axe	1	
47	GU98054314	Vis	2	
48	GU19235900	Plaquette de sécurité	1	
49	GU19202600	Vis spéciale	1	

Assembly	MOTEUR
Code	34.18
Description	Démarreur Bendix
Revision	1

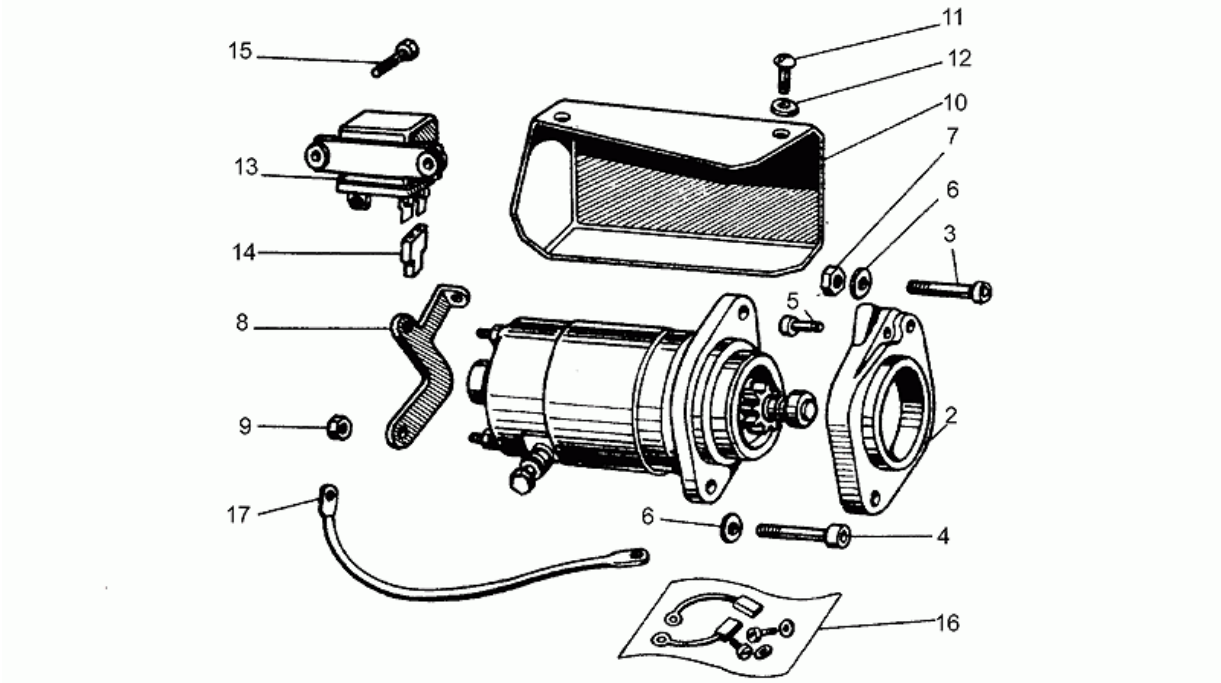

Pos.	Code	Description	Q.ty	Variants
2	GU14731806	Plaque	1	
3	GU98820450	Vis	1	
4	GU98820435	Vis	1	
5	GU98822420	Vis	1	
6	GU95004208	Rondelle	2	
7	GU92602208	Ecrou M8X1,25	2	
8	GU19733800	Support	1	
9	GU92630105	Ecrou	2	
10	GU19733200	Protection	1	
11	GU98310612	Vis	2	
12	GU95004206	Rondelle 6,15x11x0,8	2	
13	GU14707605	Relais démarrage	1	
14	GU93400863	Connecteur mâle	2	
15	GU98052220	Vis	2	
16	GU14730571	Kit rév. démarreur	0	
17	GU19748400	Câblage masse-batterie	3	

Assembly	MOTEUR
Code	34.19
Description	Pompe huile
Revision	1

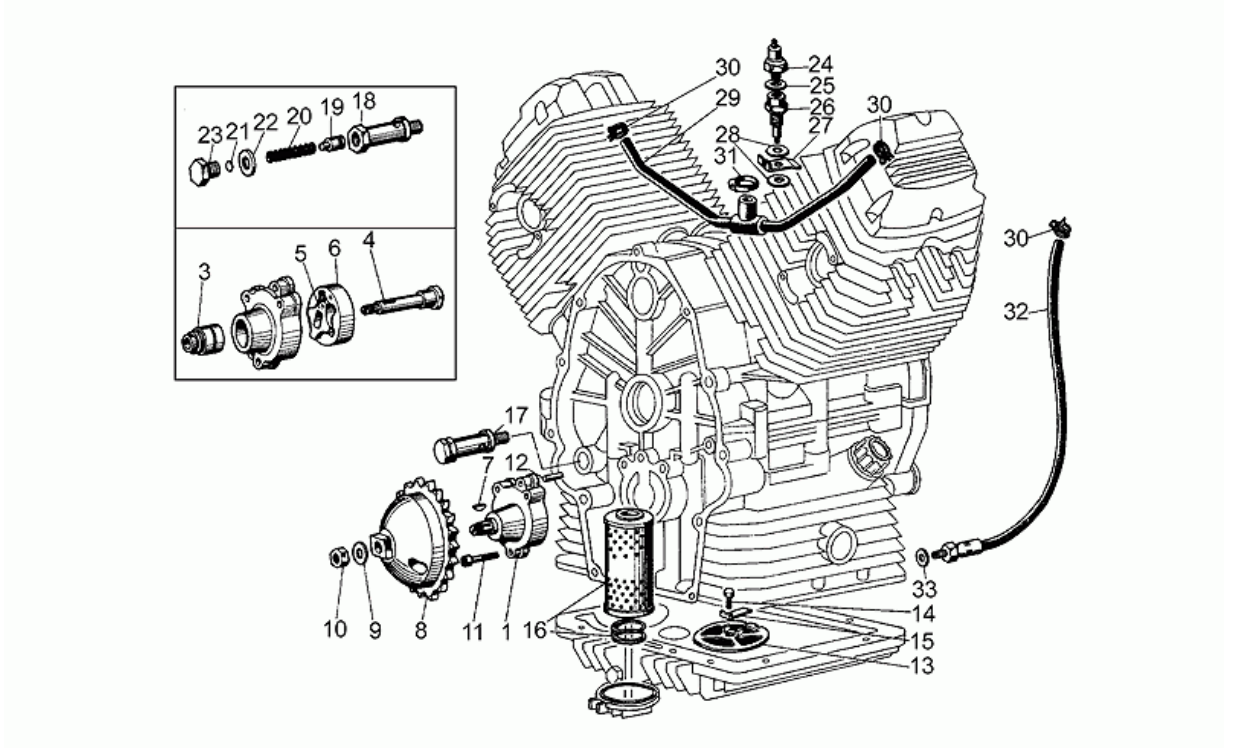

Pos.	Code	Description	Q.ty	Variants
1	GU19146400	Pompe à huile complète	1	
3	GU92252210	Roulement à rouleaux 10x22x20	1	
4	GU19147800	Arbre pompe huile	1	
5	GU19148400	Rotor intérieur	1	
6	GU19148600	Rotor extérieur	1	
7	GU13148300	Clavette	1	
8	GU19147700	Engrenage pompe huile	1	
9	GU19149800	Rondelle 10,5x16x1	1	
10	GU92602510	Ecrou M10x1,25	1	
11	GU98620330	Vis M6X30	3	
12	GU95512062	Goupille	2	
13	GU19152200	Filtre à huile	1	
14	GU98054314	Vis	1	
15	GU95187006	Plaquette	1	
16	GU19153000	Filtre à huile	1	
17	GU10158201	Soupape huile complète	1	
18	GU10158701	Corps de soupape	1	
19	GU12150900	Piston	1	
20	GU94321072	Ressort de soupape	1	
21	GU12150700	Fond	1	
22	GU95100523	Rondelle 14,5X20X1	1	
23	GU12159000	Bouchon	1	
24	GU17768750	Détecteur pression	1	
25	GU12006400	Garniture 12,25	1	
26	GU19055800	Raccord	1	
27	GU19055900	Plaquette	1	
28	GU12006400	Garniture 12,25	2	
29	GU19159600	Tuyau reniflard radiateur	1	

Assembly	MOTEUR
Code	34.19
Description	Pompe huile
Revision	1

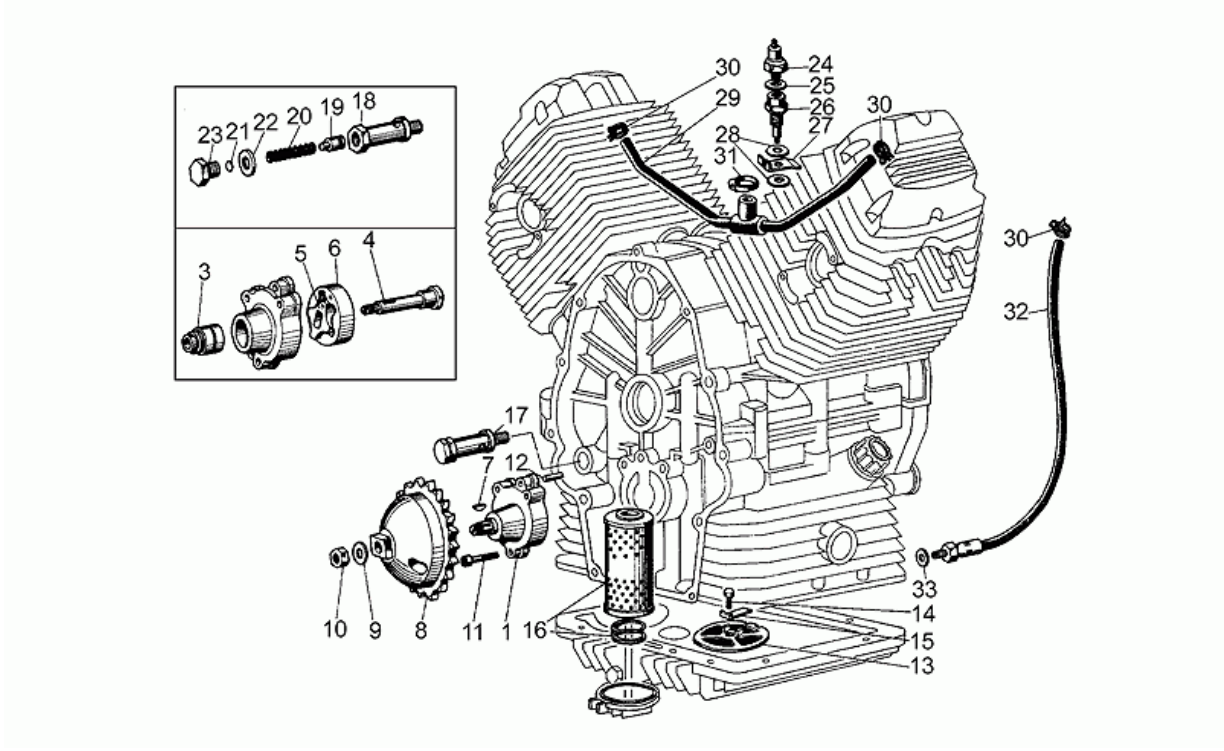

Pos.	Code	Description	Q.ty	Variants
30	GU61108400	Collier	3	
31	GU12157800	Collier	1	
32	GU19159300	Reniflard	1	
33	GU12154200	Joint 8,25x15x1	1	

Assembly	MOTEUR
Code	34.20
Description	Carter de boîte vitesses
Revision	1

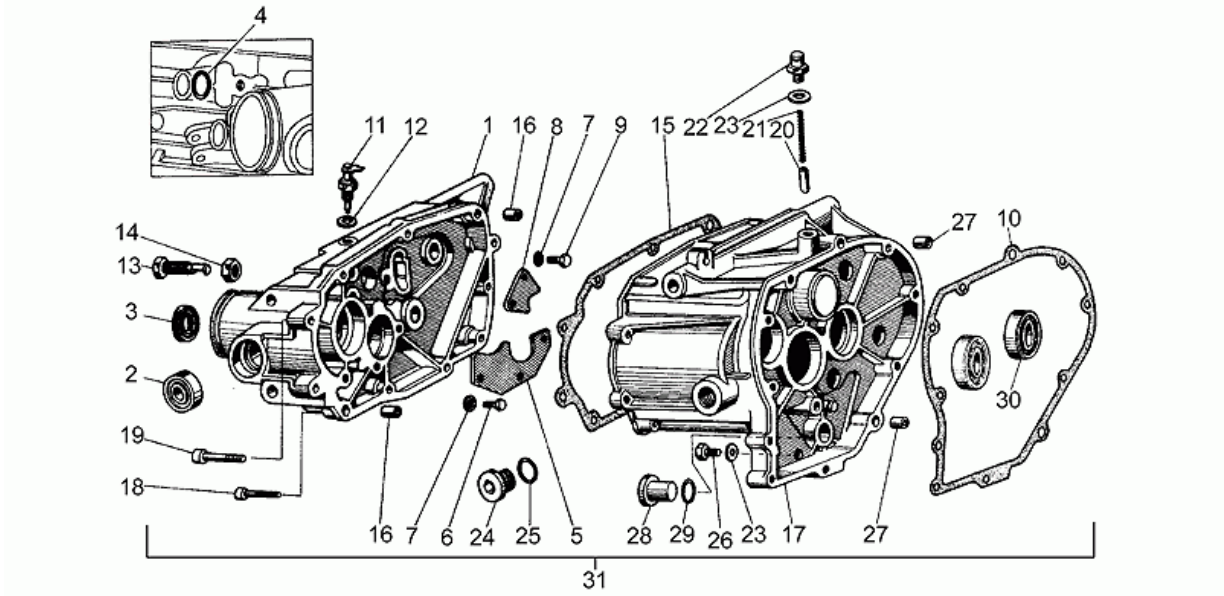

Pos.	Code	Description	Q.ty	Variants
1	GU19200800	Couvercle boîte de vitesses	1	
2	GU92204215	Roulement 15x35x11	2	
3	GU90402737	Joint spi	1	
4	GU90706140	Joint torique 13,95x2,92	1	
5	GU19213800	Plaque	1	
6	GU98054314	Vis	3	
7	GU14217901	Rondelle 6,4x10x0,7	5	
8	GU19235800	Plaque	1	
9	GU98054314	Vis	2	
10	GU19200300	Joint	1	
11	GU19207220	Capteur	1	
12	GU12154200	Joint 8,25x15x1	1	
13	GU19237800	Vis M12x1,25	1	
14	GU92602512	Ecrou bas M12x1,25	1	
15	GU19201120	Joint	1	
16	GU61002100	Grain de référence	2	
17	GU19200201	Carter de boîte vitesses	1	
18	GU98620330	Vis M6X30	7	
19	GU98620435	Vis M8X35	4	
20	GU55234700	Encliquetage	1	
21	GU94321067	Retour levier démarrage	1	
22	GU19206501	Bouchon purge	1	
23	GU10528900	Garniture	2	
24	GU12022600	Bouchon huile	1	
25	GU90706203	Joint torique 20,24X2,62	1	
26	GU95980214	Bouchon niveau huile	1	
27	GU61002100	Grain de référence	2	
28	GU19204100	Bouchon	1	

Assembly	MOTEUR
Code	34.20
Description	Carter de boîte vitesses
Revision	1

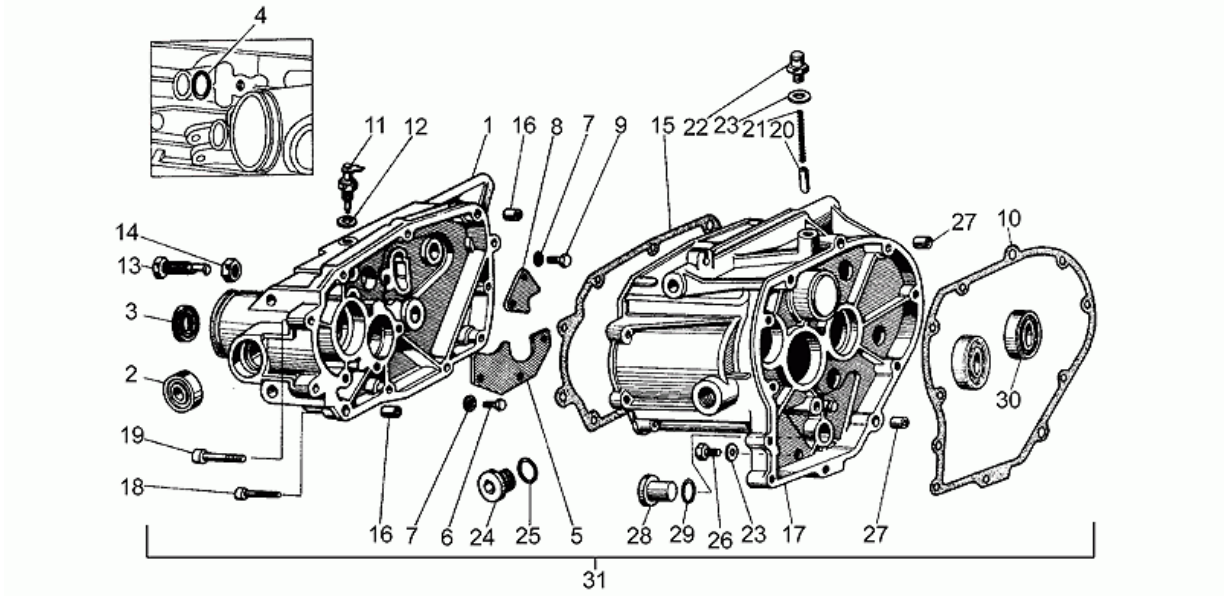

Pos.	Code	Description	Q.ty	Variants
29	GU90401832	Joint spi	1	
30	GU92201120	Roulement à billes 20x42x12	1	
31	GU19991550	Boîte de vitesses cpl.	1	**Spécifications techniques:**Version "V50"[V50]

PIAGGIO&C.s.p.a.


MOTO GUZZI
V 35
MOTO GUZZI
V 35
LE MANS II
MOTO
50

Moto Guzzi V50 1976



AI

BASAMENTO E COPERCHI
CRANKCASE - COVERS
CARTER MOTEUR - COUVERCLES
KURBELGEHÄUSE UNT. - DECKEL

V35-V50
Tavole - Drawing
Table - Bild
1

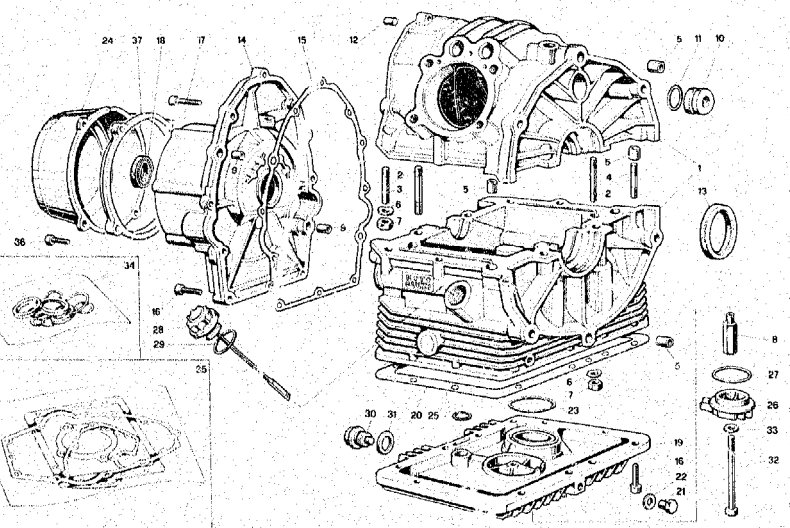

NOTE NOTES NOTES MARKE	POS N	N. COD. CODE No. No. CODE CODE Nr.	Q.tà Q.ty Q.té Menge	DENOMINAZIONE	DESCRIPTION	DESIGNATION	BEZEICHNUNG
	1	19 00 01 00	1	Basamenti accoppiati	Coupled crankcase	Carters couplés	Kurbelgehäuse
	2	96 45 14 55	4	Prig. lungo chius. bas.	Stud bolt	Goujon	Stiftschraube
	3	96 45 14 30	4	Prigioniero corto	Short stud bolt	Goujon court	Kurzstiftschraube
	4	96 45 14 35	2	Prigioniero medio	Middle stud bolt	Goujon moyen	Mittelstiftschraube
	5	61 00 20 00	4	Boccola di riferimento	Bush	Douille	Buchse
	6	61 27 03 00	10	Rosetta elast. ondul.	Tooth washer	Rondelle dentée	Zahnscheibe
	7	92 60 22 08	10	Dado per prigionieri	Nut	Ecrou	Mutter
	8	19 00 38 00	1	Raccordo sul basam.	Union	Raccord	Verbindung
	9	61 00 21 00	1	Boccola di riferimento	Bush	Douille	Buchse
	10	19 01 63 01	1	Tappo chiusura foro	Plug	Bouchon	Stopfen
	11	90 70 62 52	1	Guarnizione per tappo	Gasket	Joint	Dichtung
	12	19 01 60 04	1	Tappo su semib. supp.	Plug	Bouchon	Stopfen
	13	90 40 63 67	1	Anello di tenuta	Seal ring	Bague d'étanchéité	Dichtring
	14	19 00 14 00	1	Coperchio distr. buz.	Cover	Couvercle	Deckel
	15	19 00 12 00	1	Guarnizione per cop.	Gasket	Joint	Dichtung
	16	98 62 05 25	22	Vite per cop. e coppa	Screw	Vis	Schraube
	17	98 62 [illegible] 30	2	Vite lunga fiss. cop.	Screw	Vis	Schraube
	18	90 40 [illegible] 39	1	Anello di tenuta	Seal ring	Bague d'étanchéité	Dichtring
	19	19 00 [illegible] 5 00	1	Coppa olio	Oil sump	Carter inférieur	Ölwanne
	20	19 0[illegible] 16 00	1	Guarnizione	Gasket	Joint	Dichtung
	21	95 [illegible] 02 12	1	Tappo scarico olio	Oil drain plug	Bouchon d'éch. huile	Auslassölstopfen
	22	10 [illegible] 89 00	1	Guarnizione alluminio	Gasket	Joint	Dichtung
	23	90 [illegible] 65 23	1	Anello di tenuta	Seal ring	Bague d'étanchéité	Dichtring
	24	19 30 16 00	1	Coperchio generatore	Cover	Couvercle	Deckel
	25	9[illegible] 70 61 70	1	Anello di tenuta	Seal ring	Bague d'étanchéité	Dichtring
	26	[illegible] 00 34 00	1	Coperchietto	Cover	Couvercle	Deckel
	27	0 70 64 60	1	Anello di tenuta	Seal ring	Bague d'étanchéité	Dichtring
	28	19 00 49 00	1	Tappo carico olio	Oil filler plug	Bouchon de rempl. huile	Öleinfüllstutzen
	29	90 70 62 82	1	Anello di tenuta	Seal ring	Bague d'étanchéité	Dichtring
	30	12 00 37 02	1	Tappo scarico olio	Oil drain plug	Bouchon d'éch. huile	Auslassölstopfen
	31	95 10 07 09	1	Guarnizione	Gasket	Joint	Dichtung
	32	98 05 24 90	1	Bullone fiss. filtro	Bolt	Boulon	Bolzen
	33	12 15 42 00	1	Rondella	Washer	Rondelle	Scheibe
	34	19 99 95 00	1	Serie paraolio	Oil seal set	Jeu retour d'huile	Ölspritzringsatz
	35	19 99 90 00	1	Serie guarnizioni	Gasket set	Jeu de joints	Dichtungsatz
	36	98 31 06 30	4	Vite fiss. cop.	Screw	Vis	Schraube

INDEX

BODY.....B9-B11
BUMPER GROUP.....B8

CLUTCH.....A5-A6
CLUTCH.....A13-A14
CONNECTING SYSTEM.A5-A6
CONTROLS.....B15-B19
COVERS.....A1-A2
CRANKCASE.....A1-A2
CYLINDER.....A3-A4
CYLINDER HEAD.....A3-A4

EXHAUST.....A8-A11
EXPORT VERSION
MODIFICATIONS.....D1-D2

FEEDING.....A8-A11
FORK.....B1
FRAME.....B5-B7
FRONT SUSPENSION..B12-B13
FRONT WHEEL.....B14

IGNITION.....C1-C4
INSTRUMENT PANEL..B18-B19

LIGHTING.....C5-C6
LUBRICATION.....A1

PEDAL.....B15-B17
PEDAL STARTER.....A5
POLICE VERSION....E4-E6

REAR SUSPENSION...B12-B13
REAR TRANSMISSION B2-B4
REAR WHEEL.....B14

TIMING SYSTEM.....A7
TRANSMISSION.....A18-A20
TRANSMISSION CASE.A16-A17

BASAMENTO E COPERCHI
CRANKCASE - COVERS
CARTER MOTEUR - COUVERCLES
KURBELGEHÄUSEUNT. - DECKEL

A2

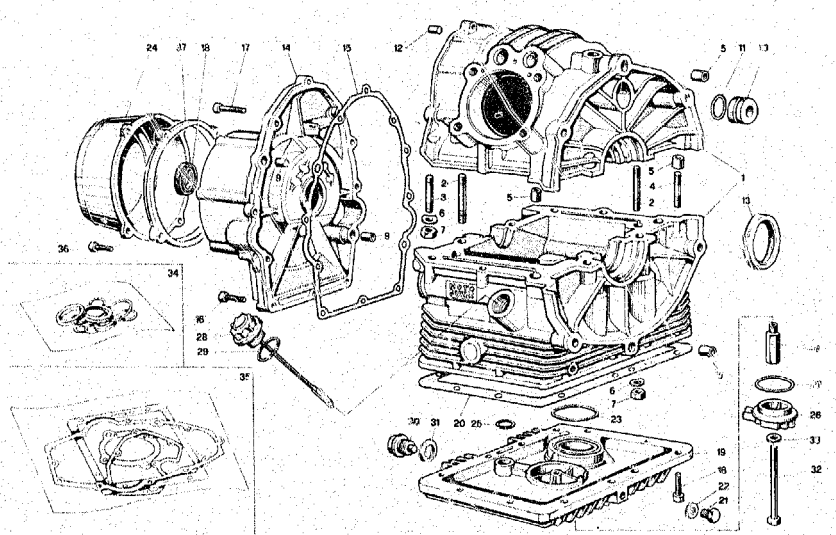

NOTE NOTES NOTES ANMERK.	POS. N.	N. COD. CODE No. No. CODE CODE Nr.	Q.tà Q.ty Q.té M.ge	DENOMINAZIONE	DESCRIPTION	DESIGNATION	BEZEICHNUNG
	37	18 00 11 50	1	Flangia sup. /altern.	Flange	Flasque	Flansch
●		19 99 10 10	1	Motore completo	Engine assy. without	Moteur complet	Motor, kpl
				senza cambio	transmission	sans boîte à vitesses	ohne Schaltgetriebe
©		19 99 14 10	1	Motore e cambio com.	Engine & transm. com.	Moteur et boîte à vit. c	Motor und Schaltung

● I sottonotati particolari rappresentano le varianti per il mod. V50
Following items refer to V50 mod. only
Les pièces indiquées ci-dessous représentent les variantes pour le mod. V50
Die untergegebene Teile sind nur für Modell V50 gültig

	35	19 99 90 50	1	Serie guarnizioni	Gasket set	Jeu de joints	Dichtungssatz
		19 99 10 50	1	Motore completo	Engine assy. without	Moteur complet	Motor, kpl
				senza cambio	transmission	sans boîte à vitesses	ohne Schaltgetriebe
		19 99 14 50	1	Motore e cambio com.	Engine & transm. com.	Moteur et boîte à vit. c	Motor und Schaltg.

INDEX

BODY.....B9-B11
BUMPER GROUP.....B8

CLUTCH.....A5-A6
CLUTCH.....A13-A14
CONNECTING SYSTEM..A5-A6
CONTROLS.....B15-B19
COVERS.....A1-A2
CRANKCASE.....A1-A2
CYLINDER.....A3-A4
CYLINDER HEAD.....A3-A4

EXHAUST.....A8-A11
EXPORT VERSION
MODIFICATIONS.....D1-D2

FEEDING.....A8-A11
FORK.....B1
FRAME.....B5-B7
FRONT SUSPENSION..B12-B13
FRONT WHEEL.....B14

IGNITION.....C1-C4
INSTRUMENT PANEL..B18-B19

LIGHTING.....C5-C6
LUBRICATION.....A12

PEDAL.....B15-B17
PEDAL STARTER.....A15
POLICE VERSION....E1-E6

REAR SUSPENSION...B12-B13
REAR TRANSMISSION.B2-B4
REAR WHEEL.....B14

TIMING SYSTEM.....A7
TRANSMISSION.....A18-A20
TRANSMISSION CASE.A16-A17

TESTA E CILINDRO
HEAD AND CYLINDER
CULASSE ET CYLINDRE
KOPF UND ZYLINDER

V35-V50

Tavola - Drawing
Table - Bild **2**

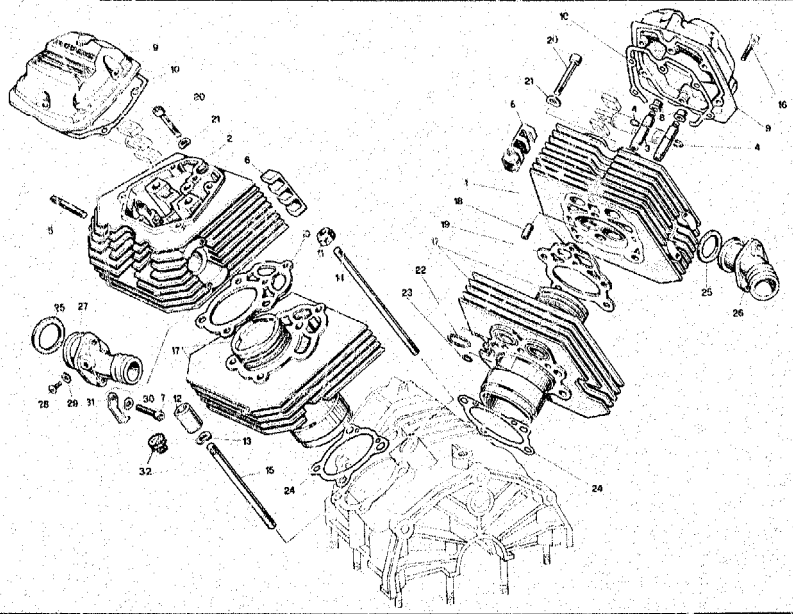

NOTE NOTES NOTES MARKE	POS. N.	N. COD. CODE No. No. CODE CODE Nr.	Q.tà Q.ty Q.té M.ge	DENOMINAZIONE	DESCRIPTION	DESIGNATION	BEZEICHNUNG
●	1	19 02 21 10	1	Testa dx completa	R.H. cylinder head	Culasse D compl.	Zylinderkopf, R.
●	2	19 02 22 10	1	Testa sx completa	L.H. cylinder head	Culasse G compl.	Zylinderkopf, L.
	3	61 03 68 01	4	Guidavalvola	Valve guide	Guide de soupape	Ventilführung
	4	90 3F 39 08	4	Anello elastico	Circlip	Jonc élastique	Sprengring
	5	96 50 60 42	4	Prigioniero	Stud bolt	Goujon	Stiftschraube
	6	19 02 53 00	4	Tassello antivibrante	Vibration damp. piece	Anti-vibrant	Schwingungsdämpfer
	7	98 82 23 25	4	Vite	Screw	Vis	Schraube
	8	61 03 78 01	4	Cappellotto ten. olio	Cap	Capuchon	Kappe
	9	19 02 35 00	2	Coperchio testa	Head cover	Couvercle culasse	Zylinderkopfdeckel
	10	19 02 37 00	2	Guarnizione per cop.	Gasket	Joint	Dichtung
	11	92 60 20 10	4	Dado prig. lungo	Nut	Ecrou	Mutter
	12	13 01 19 00	4	Dado a colonnetta	Nut	Ecrou	Mutter
	13	95 12 91 80	4	Ranella	Washer	Rondelle	Scheibe
	14	96 51 01 82	4	Tirante lungo	Long tie rod	Tirant long	Lange Tragstange
	15	96 51 01 25	4	Tirante corto	Short tie rod	Tirant court	Kurze Tragstange
	16	98 82 03 25	12	Vite fiss. coperchio	Screw	Vis	Schraube
●	17	19 06 01 00	2	Cilindro e pistone	Cylinder & piston	Cylindre e piston	Zylinder u. Kolben
	18	19 02 13 00	2	Boccola di riferimento	Bush	Douille	Buchse
●	19	19 02 20 00	2	Guarnizione	Gasket	Joint	Dichtung
	20	98 62 04 45	2	Vite	Screw	Vis	Schraube
	21	61 27 07 00	2	Ranella	Washer	Rondelle	Scheibe
	22	90 70 62 52	4	Guarnizione OR	Gasket	Joint	Dichtung
	23	61 02 72 00	2	Guarnizione OR	Gasket	Joint	Dichtung
	24	19 02 08 00	2	Guarnizione	Gasket	Joint	Dichtung
	25	19 11 55 00	2	Guarnizione per pipe	Gasket	Joint	Dichtung
	26	19 11 50 50	1	Pipa aspirazione dx	R.H. manifold	Pipe D	Ansaugkrummer, R.
	27	19 11 50 51	1	Pipa aspirazione sx	L.H. manifold	Pipe G	Ansaugkrummer, L.
	28	98 31 06 10	2	Vite chiusura foro	Screw	Vis	Schraube
	29	95 10 01 16	2	Ranella	Washer	Rondelle	Scheibe
	30	61 01 38 00	2	Ranella per vite	Washer	Rondelle	Scheibe
	31	19 71 80 00	2	Fascetta	Clamp	Collier	Schelle
	32	93 18 02 45	4	Tappo per dado	Plug	Bouchon	Stopfen

INDEX

BODY.....B9-B11
BUMPER GROUP.....B8

CLUTCH.....A5-A6
CLUTCH.....A13-A14
CONNECTING SYSTEM.A5-A6
CONTROLS.....B15-B19
COVERS.....A1-A2
CRANKCASE.....A1-A2
CYLINDER.....A3-A4
CYLINDER HEAD.....A3-A4

EXHAUST.....A9-A11
EXPORT VERSION
MODIFICATIONS.....D1-D2

FEEDING.....A8-A11
FORK.....B1
FRAME.....B5-B7
FRONT SUSPENSION..B12-B13
FRONT WHEEL.....B14

IGNITION.....C1-C4
INSTRUMENT PANEL..B18-B19

LIGHTING.....C5-C6
LUBRICATION.....A12

PEDAL.....B15-B17
PEDAL STARTER.....A15
POLICE VERSION....E1-E6

REAR SUSPENSION...B12-B13
REAR TRANSMISSION.B2-B4
REAR WHEEL.....B14

TIMING SYSTEM.....A7
TRANSMISSION.....A18-A20
TRANSMISSION CASE.A16-A17

V35-V50	TESTA E CILINDRO HEAD AND CYLINDER CULASSE ET CYLINDRE KOPF UND ZYLINDER	A4
Tavola - Drawing Table - Bild 2		

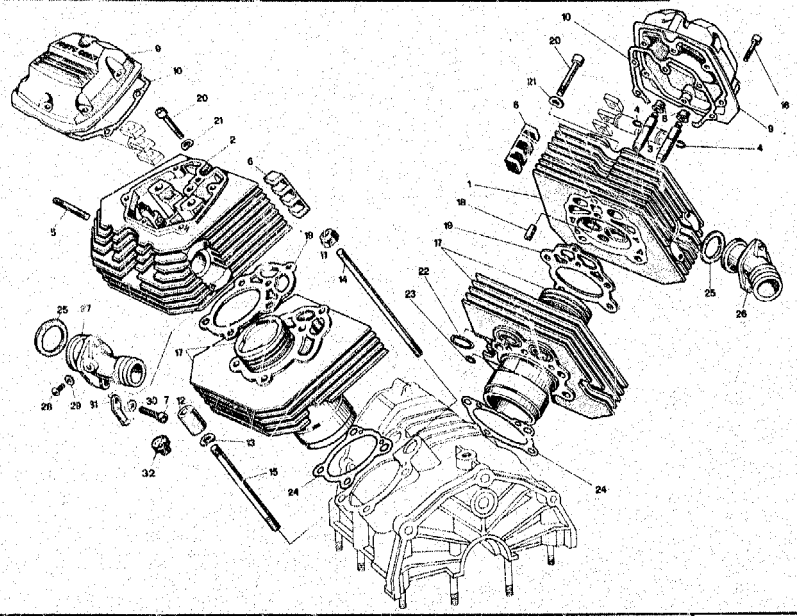

NOTE NOTES NOTES MARKE	POS. N	N. COD. CODE No. No. CODE CODE Nr.	Q.tà Q.ty Q.té M.ge	DENOMINAZIONE	DESCRIPTION	DESIGNATION	BEZEICHNUNG
●	1	19 02 21 50	1	Testa dx completa	R.H. cylinder head	Culasse D compl.	Zylinderkopf, R.
●	2	19 02 22 50	1	Testa sx completa	L.H. cylinder head	Culasse G compl.	Zylinderkopf, L.
●	17	19 06 01 50	2	Cilindro e pistone	Cylinder & piston	Cylindre et piston	Zylinder und Kolben
●	19	19 02 20 50	2	Guarnizione	Gasket	Joint	Dichtung

● I sottonotati particolari rappresentano le varianti per il mod. V50
Following items refer to V50 mod. only
Les pièces indiquées ci-dessous représentent les variantes pour le mod. V50
Die untergegebene Teile sind nur für Modell V50 gültig

INDEX

BODY.....B9-B11
BUMPER GROUP.....B8

CLUTCH.....A5-A6
CLUTCH.....A13-A14
CONNECTING SYSTEM.A5-A6
CONTROLS.....B15-B19
COVERS.....A1-A2
CRANKCASE.....A1-A2
CYLINDER.....A3-A4
CYLINDER HEAD.....A3-A4

EXHAUST.....A8-A11
EXPORT VERSION
MODIFICATIONS.....D1-D2

FEEDING.....A8-A11
FORK.....B1
FRAME.....B5-B7
FRONT SUSPENSION..B12-B13
FRONT WHEEL.....B14

IGNITION.....C1-C4
INSTRUMENT PANEL..B18-B19

LIGHTING.....C5-C6
LUBRICATION.....A12

PEDAL.....B15-B17
PEDAL STARTER.....A15
POLICE VERSION....E1-E6

REAR SUSPENSION...B12-B13
REAR TRANSMISSION.B2-B4
REAR WHEEL.....B14

TIMING SYSTEM.....A7
TRANSMISSION.....A18-A20
TRANSMISSION CASE.A16-A17

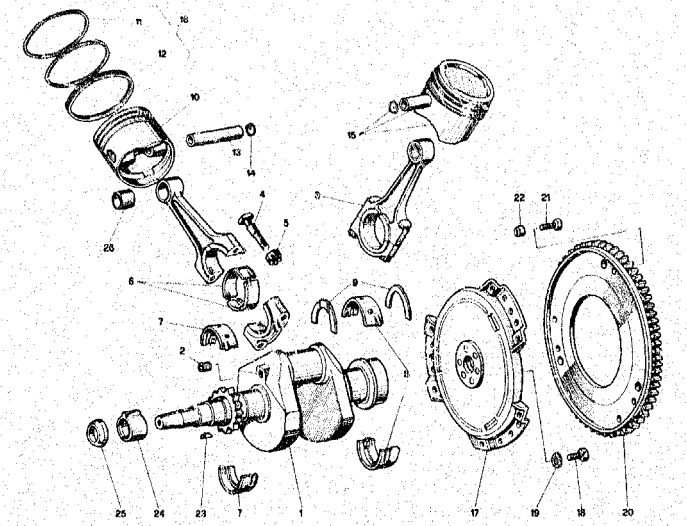

NOTE NOTES NOTES MARKE	FOS. N.	N. COD. CODE No. No. CODE CODE Nr.	Q.tà Q.ty Q.té M.ge	DENOMINAZIONE	DESCRIPTION	DESIGNATION	BEZEICHNUNG
●	1	19 06 42 00	1	Albero motore	Crankshaft	Vilebrequin	Kurbelwelle
	2	19 06 54 00	1	Tappo	Plug	Bouchon	Stopfen
	3	19 06 15 00	2	Biella completa	Connecting rod, assy	Bielle complète	Pleuelstange, kpl.
	4	61 06 22 01	4	Vite fiss. cappello	Screw	Vis	Schraube
	5	61 06 24 01	4	Dado	Nut	Ecrou	Mutter
	6	61 06 20 10	4	Semicuscinetto di biella	Big-end half bearing	Demi-couss. de tête biel.	Pleuellagerschale
	7	61 06 66 00	2	Semicuscin. di banco	Main half-bearing	Demi-couss. de vilebr.	Hauptlager
	8	19 06 65 00	2	Semicuscin. di banco posteriore	Rear main half-bearing	Demi-couss. de vilebr. AR	Hint. Hauptlager
	9	19 06 64 00	2	Semirosetta di spall.	Half-washer	Demi-rondelle	Halb-Scheibe
●	10	19 06 04 00	2	Pistone nudo	Piston	Piston	Kolben
●	11	19 06 07 00	4	Fascia elastica di ten.	Piston ring	Segment d'étanchéité	Kolbenring
●	12	19 06 10 00	2	Fascia raschiaolio	Scraper ring	Segment racleur	Olabstreifring
●	13	62 06 12 00	2	Spinotto per pistone	Wrist pin	Axe du piston	Kolbenbolzen
	14	61 06 13 00	4	Anello di fermo	Retaining ring	Bague de serrage	Verschlussring
●	15	19 06 02 00	2	Pistone completo	Piston assy	Piston complet	Kolben, kpl.
●	16	19 06 06 00	1	Gruppo fasce elastiche	Piston ring set	Ensemble de segm. d'ét.	Kolbenringsatz
	17	19 06 03 00	1	Campana volano friz.	Clutch housing	Carter d'embrayage	Kupplungsgehäuse
	18	19 06 77 00	6	Vite	Screw	Vis	Schraube
	19	14 61 59 01	6	Rosetta	Washer	Rondelle	Scheibe
	20	19 06 79 00	1	Corona dentata	Crown gear	Couronne dentée	Anlasszahnkranz
	21	98 05 43 18	6	Vite fiss. corona	Screw	Vis	Schraube
	22	92 63 01 06	6	Dado autobloccante	Self-locking nut	Ecrou à autoblocage	Hutmutter
	23	91 70 13 50	1	Chiavetta per rotore	Key	Languette	Keil
	24	19 72 10 00	1	Rotore d'accensione	Starter rotor	Rotor	Rotor
	25	61 06 68 00	1	Gommino	Rubber	Caoutchouc	Gummistück
	26	19 06 18 00	2	Boccola biella	Connecting rod bush	Douille bielle	Pleuelbuchse

● I sottonotati particolari rappresentano le varianti per il mod. V50
Following items refer to V50 mod. only
Les pièces indiquées ci-dessous représentent les variantes pour le mod. V50
Die untergegebene Teile sind nur für Modell V50 gültig

INDEX

BODY.....B9-B11
BUMPER GROUP.....B5

CLUTCH.....A5-A6
CLUTCH.....A13-A14
CONNECTING SYSTEM.A5-A6
CONTROLS.....B15-B19
COVERS.....A1-A2
CRANKCASE.....A1-A2
CYLINDER.....A3-A4
CYLINDER HEAD.....A3-A4

EXHAUST.....A8-A11
EXPORT VERSION
MODIFICATIONS.....D1-D2

FEEDING.....A8-A11
FORK.....B1
FRAME.....B5-B7
FRONT SUSPENSION..B12-B13
FRONT WHEEL.....B14

IGNITION.....C1-C4
INSTRUMENT PANEL..B18-B19

LIGHTING.....C5-C6
LUBRICATION.....A12

PEDAL.....B15-B17
PEDAL STARTER.....A15
POLICE VERSION....E1-E6

REAR SUSPENSION...B12-B13
REAR TRANSMISSION.B2-B4
REAR WHEEL.....B14

TIMING SYSTEM.....A7
TRANSMISSION.....A18-A20
TRANSMISSION CASE.A16-A17

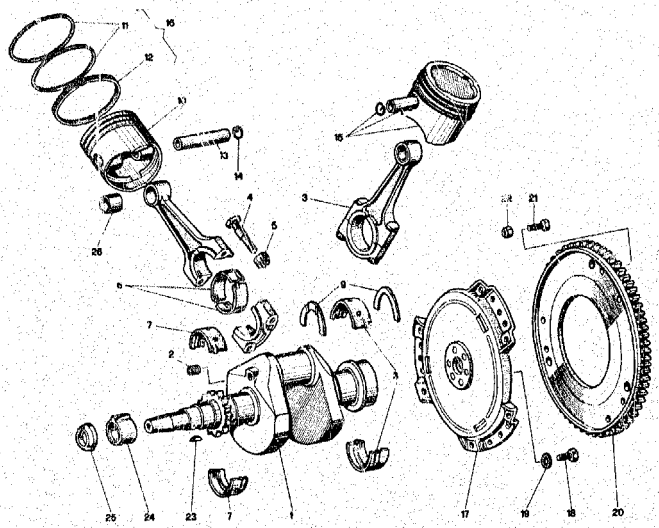

NOTE NOTES NOTES MARKE	POS. N.	N. COD. CODE No. No. CODE CODE Nr.	Q.tà Q.ty Q.té M.ge	DENOMINAZIONE	DESCRIPTION	DESIGNATION	BEZEICHNUNG
	1	19 06 42 50	1	Albero motore	Crankshaft	Vilebrequin	Kurbelwelle
*	10	19 06 04 50	2	Pistone nudo	Piston	Piston	Kolben
	11	19 06 07 50	4	Fascia elastica	Piston ring	Segment d'étanchéité	Kolbenring
	12	19 06 10 50	2	Fascia raschiaolio	Scraper ring	Segment racleur	Ölabstreifring
	13	19 06 12 50	2	Spinotto	Wrist pin	Axe du piston	Kolbenbolzen
*	15	19 06 02 50	2	Pistone completo	Piston, assy	Piston complet	Kolben, kpl.
	16	19 09 06 50	1	Gruppo fasce elastiche	Piston ring set	Ens. de segment d'ét.	Kolbenringsatz

*** Per motori decompressi - Engines low compression ratio - Pour moteurs B.T.C.**
*** Für Motoren mit niedrigen Kompressionsverhältnis**

10	19 06 04 60	2	Pistone nudo	Piston	Piston	Kolben
15	19 06 02 60	2	Pistone completo	Piston, assy	Piston complet	Kolben, kpl.

INDEX

BODY.....B9-B11
BUMPER GROUP.....B8

CLUTCH.....A5-A6
CLUTCH.....A13-A14
CONNECTING SYSTEM.A5-A6
CONTROLS.....B15-B19
COVERS.....A1-A2
CRANKCASE.....A1-A2
CYLINDER.....A3-A4
CYLINDER HEAD.....A3-A4

EXHAUST.....A8-A11
EXPORT VERSION
MODIFICATIONS.....D1-D2

FEEDING.....A8-A11
FORK.....B1
FRAME.....B5-B7
FRONT SUSPENSION..B12-B13
FRONT WHEEL.....B14

IGNITION.....C1-C4
INSTRUMENT PANEL..B18-B19

LIGHTING.....C5-C6
LUBRICATION.....A12

PEDAL.....B15-B17
PEDAL STARTER.....A15
POLICE VERSION....E1-E6

REAR SUSPENSION...B12-B13
REAR TRANSMISSION.B2-B4
REAR WHEEL.....B14

TIMING SYSTEM.....A7
TRANSMISSION.....A18-A20
TRANSMISSION CASE.A16-A17

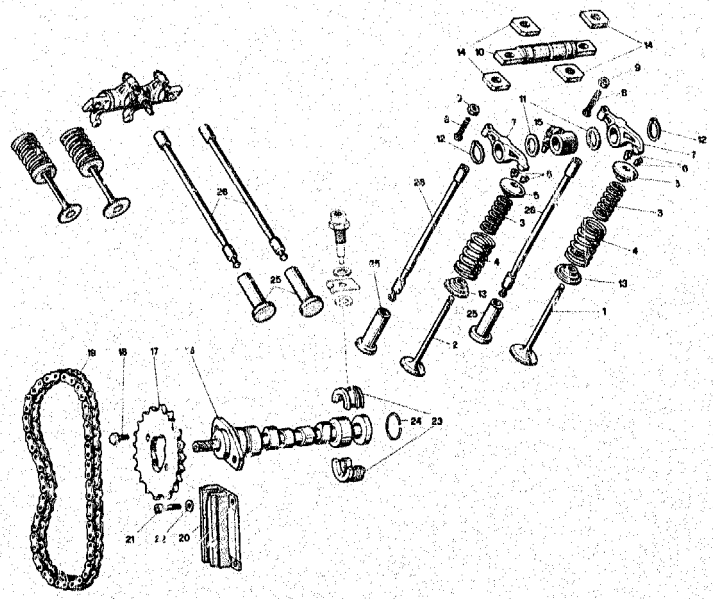

NOTE NOTES NOTES MARKE	POS. N.	N. COD. CODE No. CODE CODE Nr.	Q.tà Q.ty Q.té M.ge	DENOMINAZIONE	DESCRIPTION	DESIGNATION	BEZEICHNUNG
●	1	19 03 60 10	2	Valvola aspirazione	Intake valve	Soupape d'admission	Einlassventil
	2	19 03 61 50	2	Valvola scarico	Exhaust valve	Soupape d'échapp.	Auslassventil
	3	61 03 76 00	4	Molla interna	Inside spring	Ressort inter.	Innenfeder
	4	61 03 75 00	4	Molla esterna	Outside spring	Ressort extér.	Aussenfeder
	5	61 03 80 00	4	Piattello superiore	Upper plate	Plaque supér.	Oberteller
	6	61 03 81 00	8	Semiconi	Cotter	Demi-cône	Kegelstück
	7	19 03 05 00	4	Bilanciere aspir. scar.	Int. & exh. rocker arm	Culbut. d'adm. et éch.	Einlass-Auslasskipphebel
	8	19 03 40 00	4	Vite	Screw	Vis	Schraube
	9	92 60 24 06	4	Dado	Nut	Ecrou	Mutter
	10	19 03 20 00	2	Perno bilancieri	Rocker arm pin	Goujon de culbuteur	Kipphebelstift
	11	19 03 23 00	4	Rosetta di rasamento	Washer	Rondelle	Scheibe
	12	90 27 10 18	4	Anello Seeger	Ring	Bague	Seegerring
	13	61 03 70 00	4	Piattello inferiore	Lower plate	Plaque infér.	Unterteller
	14	19 03 29 00	8	Spessore	Spacer	Entretoise	Distanzstück
	15	19 02 76 00	2	Manicotto	Sleeve	Manchon	Manschette
	16	19 05 33 01	1	Albero a camme	Cam shaft	Arbre à cames	Verteilwelle
	17	19 05 45 00	1	Ingranaggio distribuz.	Timing gear	Pignon de distribut.	Nockenwellenrad
	18	61 05 49 00	2	Bullone	Bolt	Boulon	Bolzen
	19	19 05 60 00	1	Catena com. distribuz.	Timing chain	Chaîne de distribution	Steuerkette
	20	19 05 84 00	1	Guidacatena	Chain guide	Guide de chaîne	Kettenführung
	21	98 82 22 16	2	Vite fiss. guida	Screw	Vis	Schraube
	22	95 00 42 06	2	Rondella per vite	Washer	Rondelle	Scheibe
	23	19 05 57 00	2	Settore fermo	Sector	Secteur	Sektor
	24	90 35 30 29	1	Anello elastico	Spring ring	Bague élastique	Federring
	25	19 04 59 01	4	Punteria	Valve tappet	Poussoir de soupape	Ventilstossel
	26	19 04 56 01	4	Asta comando bilancieri	Rod	Tige	Stange

● I sottonotati particolari rappresentano le varianti per il mod. V50
Following items refer to V50 mod. only
Les pièces indiquées ci-dessous représentent les variantes pour le mod. V50
Die untergegebene Teile sind nur für Modell V50 gültig

	1	19 03 60 50	2	Valvola aspirazione	Intake valve	Soupape d'admission	Einlassventil

INDEX

BODY.....B9-B11
BUMPER GROUP.....B8

CLUTCH.....A5-A6
CLUTCH.....A13-A14
CONNECTING SYSTEM.A5-A6
CONTROLS.....B15-B19
COVERS.....A1-A3
CRANKCASE.....A1-A3
CYLINDER.....A3-A4
CYLINDER HEAD.....A3-A4

EXHAUST.....A8-A11
EXPORT VERSION
MODIFICATIONS.....D1-D2

FEEDING.....A8-A11
FORK.....B1
FRAME.....B5-B7
FRONT SUSPENSION..B12-B13
FRONT WHEEL.....B14

IGNITION.....C1-C4
INSTRUMENT PANEL..B18-B19

LIGHTING.....C5-C6
LUBRICATION.....A12

PEDAL.....B15-B17
PEDAL STARTER.....A15
POLICE VERSION....E1-E6

REAR SUSPENSION...B12-D13
REAR TRANSMISSION.B2-B4
REAR WHEEL.....B14

TIMING SYSTEM.....A7
TRANSMISSION.....A18-A20
TRANSMISSION CASE.A16-A17

A8

ALIMENTAZIONE - SCARICO
FEEDING - EXHAUST
ALIMENTATION - ECHAPPEMENT
ZUFÜHRUNG - AUSPUFF

V35-V50
Tavola - Drawing
Table - Bild
5

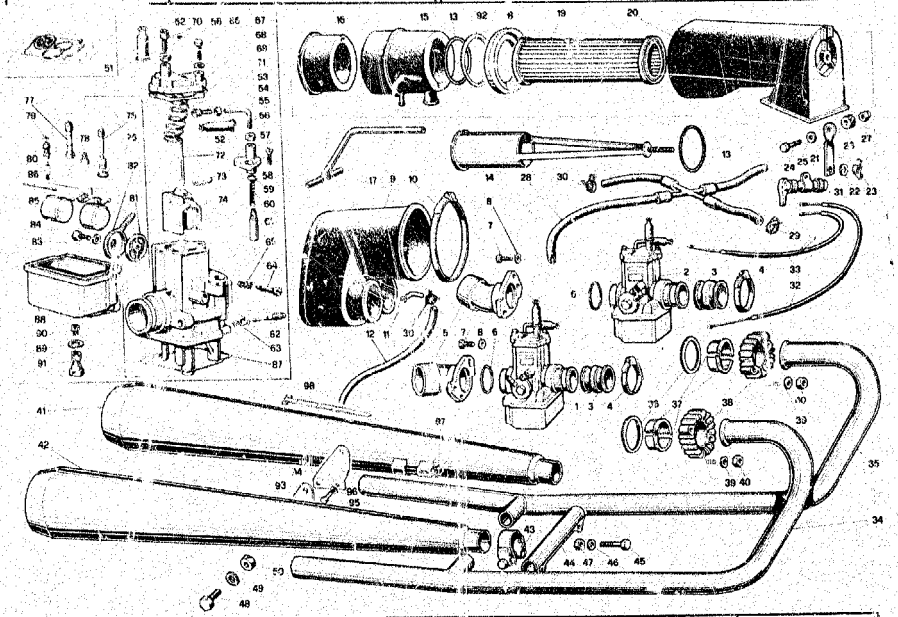

NOTE NOTES NOTES MARKE	POS N.	N. COD. CODE No. No. CODE CODE Nr.	Q.tà Q.ty Q.té M.qn	DENOMINAZIONE	DESCRIPTION	DESIGNATION	BEZEICHNUNG
●	1	19 11 26 10	1	Carbur. dx VHB 24	R.H. carbur. VHB 24	Carbur. D VHB 24	Vergaser R. VHB 24
●	2	19 11 26 11	1	Carbur. sx VHB 24	L.H. carbur. VHB 24	Carbur. G VHB 24	Vergaser. L. VHB 24
	3	91 11 43 00	2	Manicotto	Sleeve	Manchon	Manschette
	4	93 30 50 25	4	Fascetta	Clamp	Collier	Schelle
	5	19 11 44 00	2	Cornetto presa aria	Air intake	Prise d'air	Luftemlassrohr
	6	90 70 63 15	2	Anello di tenuta	Seal ring	Bague d'étanchéité	Dichtring
	7	98 05 42 14	4	Vite	Screw	Vis	Schraube
	8	95 00 42 06	4	Rondella	Washer	Rondelle	Scheibe
	9	19 11 43 00	1	Collettore aspirazione	Induction manifold	Collecteur d'admission	Ansaugsammler
	10	93 30 50 92	1	Fascetta	Clamp	Collier	Schelle
	11	17 11 46 50	1	Tubetto	Pipe	Tuyau	Rohr
■	12	823 94 20 90		Tubo sfiato	Breather pipe	Tuyau de décharge	Entlüfterrohr
	13	90 70 65 52	2	Anello di tenuta	Seal ring	Bague d'étanchéité	Dichtring
	14	19 15 57 00	1	Supporto filtro	Filter support	Support filtre	Filterhalter
	15	19 15 47 01	1	Elemento anter. sfiato	Front breather element	Elément AV décharge	Vord. Entlufterteil
	16	19 15 69 00	1	Elemento post. sfiato	Rear breather element	Elément AR décharge	Hint. Entlufterteil
	17	19 15 60 01	1	Tubo sfiato interno	Inside vent hose	Tuyau de renvoi int.	Entlüftungsschlauch
	18	17 11 34 50	1	Fondello di guida	Ring	Anneau	Ring
	19	17 11 36 50	1	Filtro aria	Filter cartridge	Cartouche filtre	Luftfilterpatrone
	20	17 11 40 50	1	Custodia filtro	Air filter chamber	Chambre de filtre air	Luftfilterkamm
	2	19 11 41 00	1	Piastra di supporto	Plate	Plaque	Platte
	22	95 10 00 59	1	Rondella	Washer	Rondelle	Scheibe
	23	92 87 03 05	1	Dado ad alette	Wing nut	Ecrou papillon	Flügelmutter
	24	98 05 22 22	1	Vite	Screw	Vis	Schraube
	25	95 10 00 59	1	Rondella	Washer	Rondelle	Scheibe
	26	91 55 10 85	1	Gommino	Rubber	Caoutchouc	Gummistück
	27	92 63 01 05	1	Dado nylon	"Nylon" nut	Ecrou en nylon	Nylonmutter
	28	19 10 65 50	1	Tubazione benzina	Fuel pipe	Tuyau d'alim. essence	Kraftstoffleitung
	29	61 10 84 00	2	Fascetta	Clamp	Collier	Schelle
	30	61 10 85 00	4	Fascetta	Clamp	Collier	Schelle
	31	19 13 31 00	1	Dispositivo cum. starter	Starter device	Dispositif de démarrage	Startvorrichtung
	32	19 13 36 00	1	Trasmissione starter dx	R.H. starter cable	Fil de démarr. D	Startkabel, R
	33	19 13 40 00	1	Trasmissione starter sx	L.H. starter cable	Fil de démarr. G	Startkabel, L
	34	19 12 07 00	1	Tubo di scarico dx	R.H. exhaust pipe	Tuyau d'échapp. D	Auspuffrohr, R
	35	19 12 07 05	1	Tubo di scarico sx	L.H. exhaust pipe	Tuyau d'échapp. G	Auspuffrohr, L
	36	61 02 52 00	2	Guarnizione	Gasket	Joint	Dichtung

INDEX

BODY.....B9-B11
BUMPER GROUP.....B8

CLUTCH.....A5-A6
CLUTCH.....A13-A14
CONNECTING SYSTEM.A5-A6
CONTROLS.....B15-B19
COVERS.....A1-A2
CRANKCASE.....A1-A2
CYLINDER.....A3-A4
CYLINDER HEAD.....A3-A4

EXHAUST.....A8-A11
EXPORT VERSION
MODIFICATIONS.....D1-D2

FEEDING.....A8-A11
FORK.....B1
FRAME.....B5-B7
FRONT SUSPENSION..B12-B13
FRONT WHEEL.....B14

IGNITION.....C1-C4
INSTRUMENT PANEL..B18-B19

LIGHTING.....C5-C6
LUBRICATION.....A12

PEDAL.....B15-B17
PEDAL STARTER.....A15
POLICE VERSION....E1-E6

REAR SUSPENSION...B12-B13
REAR TRANSMISSION.B2-B4
REAR WHEEL.....B14

TIMING SYSTEM.....A7
TRANSMISSION.....A18-A20
TRANSMISSION CASE.A16-A17

ALIMENTAZIONE - SCARICO
FEEDING - EXHAUST
ALIMENTATION - ECHAPPEMENT
ZUFÜHRUNG - AUSPUFF

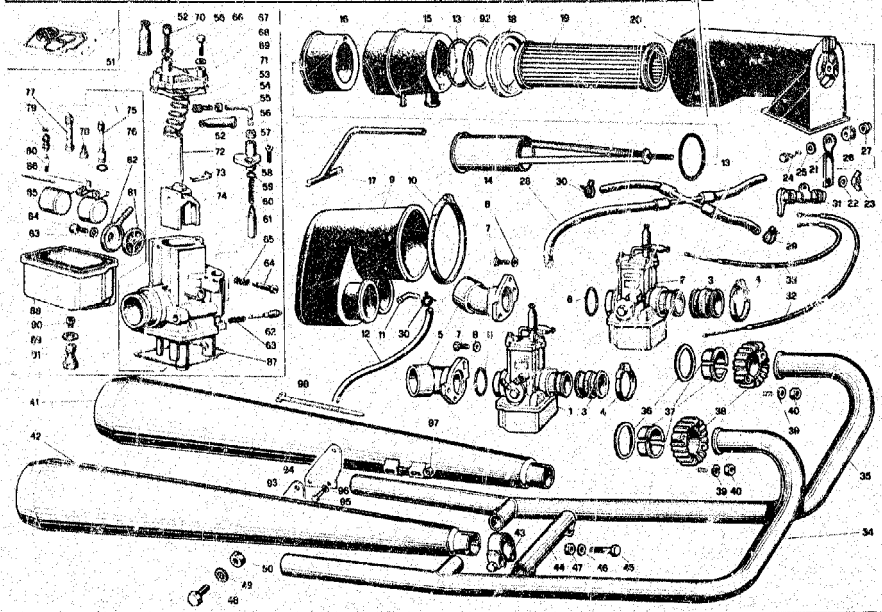

NOTE NOTES NOTES MARKE	POS. N	N. COD. CODE No. No. CODE CODE Nr.	Q.tà Qty Qté M.ge	DENOMINAZIONE	DESCRIPTION	DESIGNATION	BEZEICHNUNG
	37	61 02 54 00	4	Distanziale	Spacer	Entretoise	Distanzstück
	38	61 02 51 00	2	Ghiera	Ring nut	Collier	Ring
	39	61 01 38 00	4	Rondella	Washer	Rondelle	Scheibe
	40	92 70 10 62	4	Dado	Nut	Ecrou	Mutter
	41	19 12 29 01	1	Silenziatore sx	L.H. silencer	Silencieux G	Schalldämpfer, L.
	42	19 12 30 01	1	Silenziatore dx	R.H. silencer	Silencieux D	Schalldämpfer, R.
	43	61 12 69 70	2	Fascetta	Clamp	Collier	Schelle
	44	19 12 11 00	1	Tubo di collegamento	Connecting pipe	Tuyau de liaison	Verbindungsrohr
	45	98 05 23 30	2	Vite	Screw	Vis	Schraube
	46	95 00 02 06	2	Rondella	Washer	Rondelle	Scheibe
	47	92 60 22 06	2	Dado	Nut	Ecrou	Mutter
	48	98 05 45 22	2	Vite	Screw	Vis	Schraube
	49	95 02 11 10	2	Rondella elastica	Spring washer	Rondelle élastique	Federscheibe
	50	92 60 24 10	2	Dado	Nut	Ecrou	Mutter
	51	39 93 99 00	2	Busta guarnizioni carb.	Gasket set	Jeu de joints	Dichtungsatz
	52		4	Cappuccio	Cap	Capuchon	Kappe
	53	49 93 87 00	2	Vite tendifilo	Screw	Vis	Schraube
	54	49 93 88 00	2	Dado	Nut	Ecrou	Mutter
	55	49 93 89 00	2	Tubetto deviatore	Pipe	Tuyau	Rohr
	56	12 93 73 00	4	Dado	Nut	Ecrou	Mutter
	57	13 93 75 00	2	Vite	Screw	Vis	Schraube
	58	17 93 74 50	2	Coperchio d.spos. avv.	Starter device cover	Couvercle dispos. dém.	Startvorr. Deckel
	59		2	Guarnizione	Gasket	Joint	Dichtung
	60	25 93 76 00	2	Molla	Spring	Ressort	Feder
	61	13 93 78 00	2	Valvola avviamento	Starter valve	Soupape de démarr.	Startventil
	62	13 93 62 00	2	Vite reg. minimo	Screw	Vis	Schraube
	63	13 93 63 00	2	Molla	Spring	Ressort	Feder
	64	13 93 66 00	2	Vite reg. valvola gas	Screw	Vis	Schraube
	65	13 93 67 00	2	Molla	Spring	Ressort	Feder
	66	13 93 28 00	4	Vite fiss. cop. valv.	Screw	Vis	Schraube
	67	55 93 29 00	4	Rondella elastica	Spring washer	Rondelle élastique	Federscheibe
	68	53 93 50 00	2	Coperchio valvola	Valve cover	Couvercle soupape	Ventildeckel
	69		2	Guarnizione	Gasket	Joint	Dichtung
	70	12 93 72 00	2	Vite tendifilo	Screw	Vis	Schraube
	71	53 93 71 00	2	Molla	Spring	Ressort	Feder
	72	19 93 49 00	2	Spillo conico	Needle	Pointeau conique	Kon. Nadel

INDEX

BODY.....B9-B11
BUMPER GROUP.....B8

CLUTCH.....A5-A6
CLUTCH.....A13-A14
CONNECTING SYSTEM.A5-A6
CONTROLS.....B15-B19
COVERS.....A1-A2
CRANKCASE.....A1-A2
CYLINDER.....A3-A4
CYLINDER HEAD.....A3-A4

EXHAUST.....A8-A11
EXPORT VERSION
MODIFICATIONS.....D1-D2

FEEDING.....A9-A11
FORK.....B1
FRAME.....B5-B7
FRONT SUSPENSION..B12-B13
FRONT WHEEL.....B14

IGNITION.....C1-C4
INSTRUMENT PANEL..B18-B19

LIGHTING.....C5-C6
LUBRICATION.....A12

PEDAL.....B15-B17
PEDAL STARTER.....A15
POLICE VERSION....E1-E6

REAR SUSPENSION...B12-B13
REAR TRANSMISSION.B2-B4
REAR WHEEL.....B14

TIMING SYSTEM.....A7
TRANSMISSION.....A18-A20
TRANSMISSION CASE.A16-A17

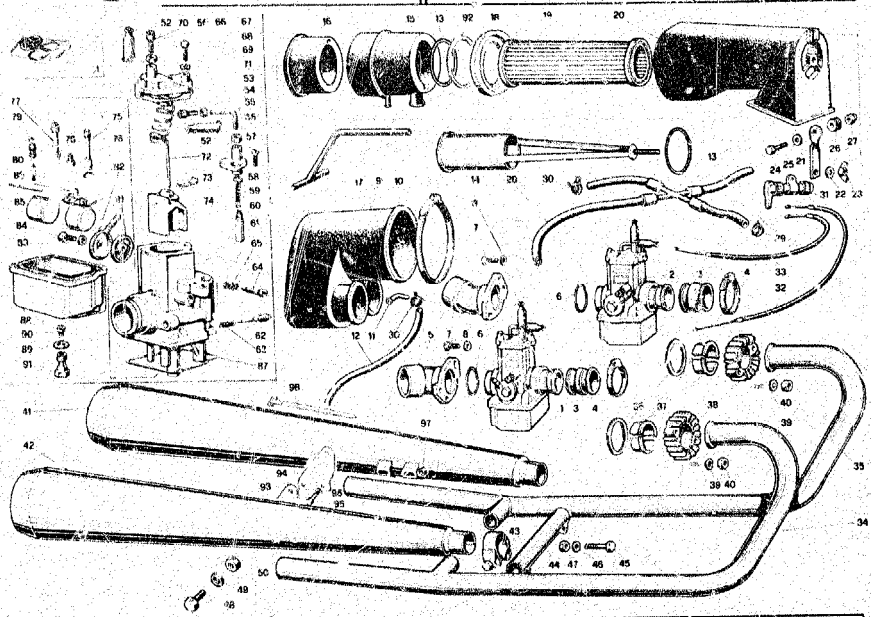

NOTE NOTES MARKE	POS. N.	N. CUD. CODE No No. CODE CODE Nr	Q.tà Q.ty Q.té M.ge	DENOMINAZIONE	DESCRIPTION	DESIGNATION	BEZEICHNUNG
	73	56 93 85 85	2	Fermaglio	Fastener clip	Goujon	Klemme
	74	61 93 46 00	2	Valvola gas	Gas valve	Soupape de gaz	Gasventil
	75	19 93 60 00	2	Getto avviamento	Starting jet	Gicleur demarreur	Anlassvergasung
*	76		2	Guarnizione	Gasket	Joint	Dichtung
	77	19 93 55 00	2	Polverizzatore (260 AH)	Fuel nozzle (260 AH)	Pulvérisateur (260 AH)	Einspritzdüse (260 AH)
	78	19 93 59 00	2	Getto minimo	Slow running jet	Gicleur ralenti	Mund V.-gasung
*	79		2	Guarnizione	Gasket	Joint	Dichtung
	80	19 93 46 00	2	Valvola spillo	Needle valve	Soupape à aiguilles	Nadelventil
*	81		2	Filtro benzina	Fuel filter	Filtre essence	Benzinfilter
	82	35 93 46 70	2	Pipetta racc. tubo	Union	Tuyau de raccord	Pipette
*	83		2	Guarnizione	Gasket	Joint	Dichtung
	84	13 93 49 00	2	Vite	Screw	Vis	Schraube
	85	61 93 43 00	2	Galleggiante	Float	Flotteur	Schwimmer
	86	13 93 31 00	2	Perno galleggiante	Pin	Pivot	Stift
*	87		2	Guarnizione	Gasket	Joint	Dichtung
	88	10 93 44 00	2	Vaschetta	Chamber	Cuvette	Becken
*	89		2	Guarnizione tappo	Gasket	Joint	Dichtung
*	90	19 93 57 00	2	Getto massimo	Main jet	Gicleur principal	Hauptdüse
	91	10 93 37 00	2	Tappo fiss. vaschetta	Chamber plug	Bouchon cuvette	Beckenzapfen
	92	19 11 39 00	1	Guarnizione	Gasket	Joint	Dichtung
	93	19 12 86 00	1	Piastra per att. sil. dx	Plate	Plaque	Platte
	94	19 12 87 00	1	Piastra per att. sil. sx	Plate	Plaque	Platte
	95	98 05 44 12	4	Vite fiss. piastre	Screw	Vis	Schraube
	96	61 27 03 00	4	Rosetta ondulata	Washer	Rondelle	Scheibe
	97	92 60 22 08	4	Dado	Nut	Ecrou	Mutter
	98	14 60 96 50	2	Fascetta	Clamp	Collier	Schelle

■ **Specificare le quantità in metri (1 m - 2 m - ecc.) - Indicate quantity required in meters (1 m - 2 m - etc.) - Indiquer les quantités en mètres (1 m - 2 m - etc.) - Lieferbar in Meter (1 m - 2 m - etc.) bestellen**

* **I particolari contrassegnati con (*) sono componenti della Busta Guarnizioni carburatore - Items marked with (*) belong to Carburetor Gasket Set - Les pièces marquées avec (*) composent le jeu de joint carburateur - Die mit (*) gezeichneten Teile gehören dem Vergaserdichtungssatz.**

INDEX

BODY.....B9-B11
BUMPER GROUP.....B8

CLUTCH.....A5-A6
CLUTCH.....A13-A14
CONNECTING SYSTEM.A5-A6
CONTROLS.....B15-B19
COVERS.....A1-A2
CRANKCASE.....A1-A2
CYLINDER.....A3-A4
CYLINDER HEAD.....A3-A4

EXHAUST.....A8-A11
EXPORT VERSION
MODIFICATIONS.....D1-D2

FEEDING.....A8-A11
FORK.....B1
FRAME.....B5-B7
FRONT SUSPENSION..B12-B13
FRONT WHEEL.....B14

IGNITION.....C1-C4
INSTRUMENT PANEL..B18-B19

LIGHTING.....C5-C6
LUBRICATION.....A12

PEDAL.....B15-B17
PEDAL STARTER.....A15
POLICE VERSION....E1-E6

REAR SUSPENSION...B12-B13
REAR TRANSMISSION.B2-B4
REAR WHEEL.....B14

TIMING SYSTEM.....A7
TRANSMISSION.....A18-A20
TRANSMISSION CASE.A16-A17

V35-V50

Tavola - Drawing
Table - Bild
5

ALIMENTAZIONE - SCARICO
FEEDING - EXHAUST
ALIMENTATION - ECHAPPEMENT
ZUFÜHRUNG - AUSPUFF

AII

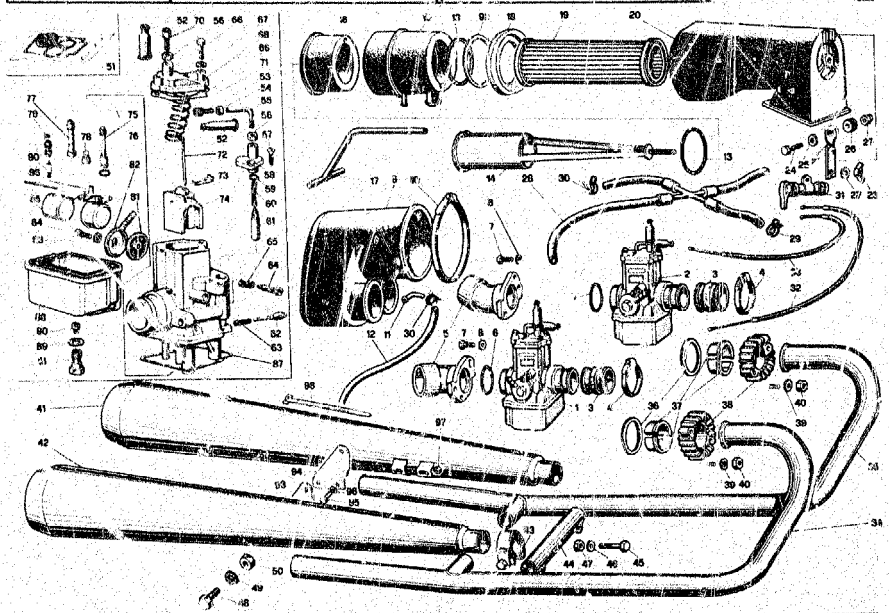

NOTE NOTES NOTES MARKE	POS N.	N. COD. CODE No. No. CODE CODE Nr.	Q.tà Q.ty Qté Mge	DENOMINAZIONE	DESCRIPTION	DESIGNATION	BEZEICHNUNG

● I sottonotati particolari rappresentano le varianti per il mod. V50
Following items refer to V50 mod. only
Les pièces indiquées ci-dessous représentent les variantes pour le mod. V50
Die untergegebene Teile sind nur für Modell V50 gültig

1	13 11 26 50	1	Carbur. dx VHB 24	R.H. carbur. VHB 24	Carbur. D VHB 24	Vergaser R. VHB 24
2	19 11 26 51	1	Carbur. sx VHB 24	L.H. carbur. VHB 24	Carbur. G VHB 24	Vergaser L. VHB 24
30	19 93 57 50	1	Getto massimo	Main jet	Gicleur principal	Hauptdüse

INDEX

BODY.....B9-B11
BUMPER GROUP.....B8

CLUTCH.....A5-A6
CLUTCH.....A13-A14
CONNECTING SYSTEM.A5-A6
CONTROLS.....B15-B19
COVERS.....A1-A2
CRANKCASE.....A1-A2
CYLINDER.....A3-A4
CYLINDER HEAD.....A3-A4

EXHAUST.....A8-A11
EXPORT VERSION
MODIFICATIONS.....D1-D2

FEEDING.....A8-A11
FORK.....B1
FRAME.....B5-B7
FRONT SUSPENSION..B12-B13
FRONT WHEEL.....B14

IGNITION.....C1-C4
INSTRUMENT PANEL..B18-B19

LIGHTING.....C5-C6
LUBRICATION.....A12

PEDAL.....B15-B17
PEDAL STARTER.....A15
POLICE VERSION....E1-E6

REAR SUSPENSION...B12-B13
REAR TRANSMISSION.B2-B4
REAR WHEEL.....B14

TIMING SYSTEM.....A7
TRANSMISSION.....A18-A20
TRANSMISSION CASE.A16-A17

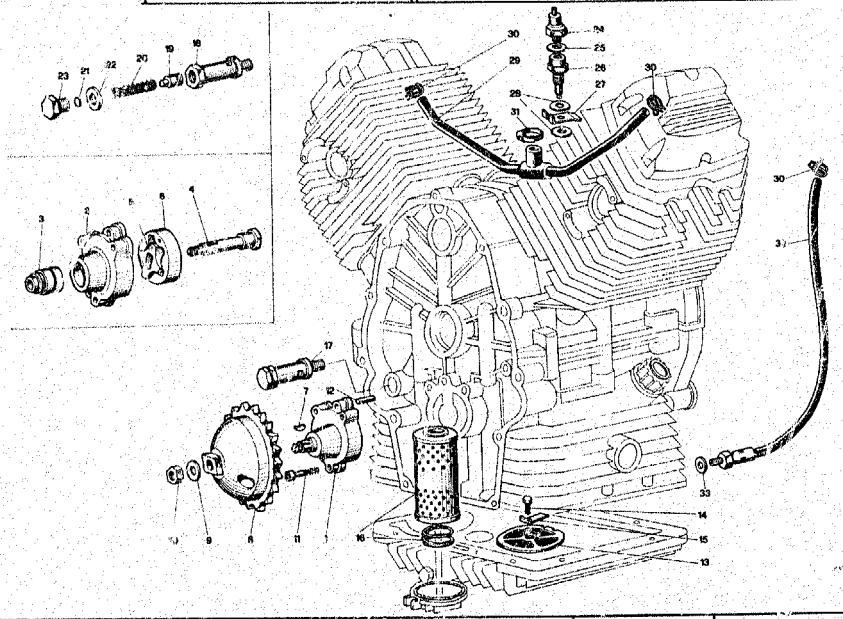

NOTE NOTES NOTES MARKE	POS. N	N. COD. CODE No. No. CODE CODE Nr.	Q.tà Q'ty Q.té M.ge	DENOMINAZIONE	DESCRIPTION	DESIGNATION	BEZEICHNUNG
	1	19 14 64 00	1	Pompa olio con rot.	Oil pump with rotor	Pompe à huile avec rot.	Ölpumpe mit Rotor
	2			Corpo pompa olio	Oil pump housing	Corps de pompe à huile	Ölpumpegehäuse
	3	92 25 22 10	1	Cuscinetto a rullini	Needle bearing	Roulement à aiguilles	Nadellager
	4	19 14 78 00	1	Albero ingr. pompa	Pump gear shaft	Arbre engr. pompe	Pumpezahnradwelle
	5	19 14 84 00	1	Rotore interno	Inside rotor	Rotor intérieur	Innenrotor
	6	19 14 86 00	1	Rotore esterno	Outside rotor	Rotor extérieur	Aussenrotor
	7	13 14 93 00	1	Chiavetta	Key	Clavette	Keil
	8	19 14 77 00	1	Ingranaggio com. pompa	Pump driving gear	Engr. d'entr. pompe	Pumpezahnrad
	9	13 14 98 00	1	Rondella di sicurezza	Washer	Rondelle	Scheibe
	10	92 60 25 10	1	Dado	Nut	Ecrou	Mutter
	11	98 02 03 30	3	Vite	Screw	Vis	Schraube
	12	95 51 20 62	2	Spina di riferimento	Pin	Clavette	Stift
	13	19 15 22 00	1	Filtro olio a rete	Gauze	Tamis	Sieb
	14	98 05 43 14	1	Vite	Screw	Vis	Schraube
	15	95 18 70 06	1	Piastrina di sicurezza	Lock plate	Plaquette frein	Schliessblech
	16	19 15 30 00	1	Cartuccia filtro olio	Cartridge	Cartouche	Patrone
	17	19 15 82 01	1	Valvola reg. press. olio	Control valve	Clapet de décharge	Druckssteuerventil
	18	19 15 87 01	1	Corpo per valvola	Valve housing	Corps de clapet	Ventilgehäuse
	19	12 15 09 00	1	Pistone con valvola	Valve piston	Piston de clapet	Ventilkolben
	20	94 32 10 72	1	Molla	Spring	Ressort	Feder
	21	12 15 07 00	1	Fondello	Bottom disc	Rondelle butée	Verschlussscheibe
	22	95 10 05 22	1	Guarnizione	Gasket	Joint	Dichtung
	23	12 15 10 00	1	Tappo	Plug	Bouchon	Stopfen
	24	17 76 87 00	1	Trasmettitore segnal.	Oil indicator	Mano-contact	Olanzeige
	25	12 00 64 00	1	Rondella in alluminio	Washer	Rondelle	Scheibe
	26	19 07 58 00	1	Raccordo	Union	Raccord	Rohrverbindung
	27	19 [illegible] 9 00	1	Piastrina di sicurezza	Lock plate	Plaquette frein	Schliessblech
	28	12 00 64 00	2	Guarnizione	Gasket	Joint	Dichtung
	29	19 15 96 00	1	Tubazione sfiato	Breather	Reniflard	Entluftungsschlauch
	30	61 10 84 00	3	Fascetta	Clamp	Collier	Schelle
	31	12 15 78 00	1	Fascetta	Clamp	Collier	Schelle
	32	19 15 93 00	1	Tubaz. recupero olio	Return pipe	Tuyau de retour	Rücklaufrohr
	33	12 15 42 00	1	Rondella	Washer	Rondelle	Scheibe

INDEX

BODY.....B9-B11
BUMPER GROUP.....B8

CLUTCH.....A5-A6
CLUTCH.....A13-A14
CONNECTING SYSTEM.A5-A6
CONTROLS.....B15-B19
COVERS.....A1-A2
CRANKCASE.....A1-A2
CYLINDER.....A3-A4
CYLINDER HEAD.....A3-A4

EXHAUST.....A8-A11
EXPORT VERSION
MODIFICATIONS.....D1-D2

FEEDING.....A8-A11
FORK.....B1
FRAME.....B5-B7
FRONT SUSPENSION..B12-B13
FRONT WHEEL.....B14

IGNITION.....C1-C4
INSTRUMENT PANEL..B18-B19

LIGHTING.....C5-C6
LUBRICATION.....A12

PEDAL.....B15-B17
PEDAL STARTER.....A15
POLICE VERSION....E1-E6

REAR SUSPENSION...B12-B13
REAR TRANSMISSION.B2-B4
REAR WHEEL.....B14

TIMING SYSTEM.....A7
TRANSMISSION.....A18-A20
TRANSMISSION CASE.A16-A17

AB

FRIZIONE
CLUTCH
EMBRAYAGE
KUPPLUNG

V35-V50

Tavola - Drawing - Table - Bild **7**

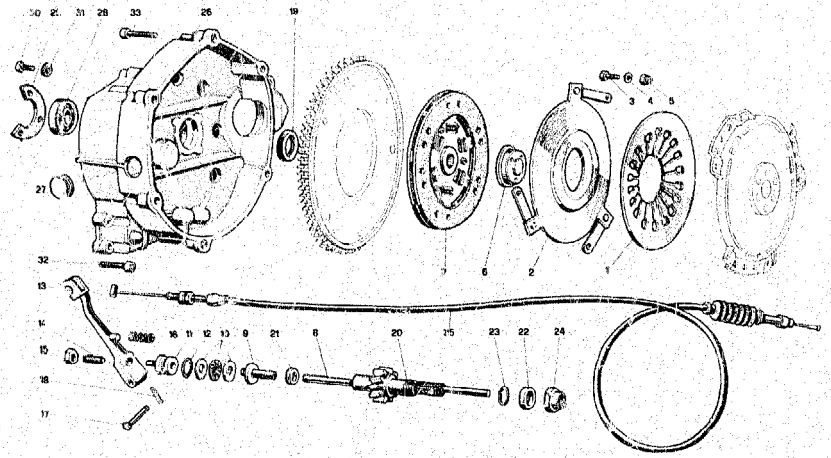

NOTE NOTES NOTES MARKE	POS. N.	N. COD CODE No. No. CODE CODE Nr	Q.tà Qty Qté Mge	DENOMINAZIONE	DESCRIPTION	DESIGNATION	BEZEICHNUNG
	1	19 08 41 00	1	Molla a diaframma	Spring	Ressort	Feder
	2	19 08 26 00	1	Piattello spingimolla	Pressure plate	Plateau de pression	Druckplatte
	3	98 05 42 14	3	Vite	Screw	Vis	Schraube
	4	95 00 42 05	3	Rondella piana	Washer	Rondelle	Scheibe
	5	92 63 01 05	3	Dado autobloccante	Self-locking nut	Ecrou à autoblocage	Hutmutter
	6	19 08 34 01	1	Scodellino	Cup	Coupelle	Manschette
	7	19 08 44 50	1	Disco condotto	Driven disc	Disque conduit	Angetr. Scheibe
	8	19 08 57 01	1	Asta spingipiattello	Rod	Tige	Stift
	9	14 08 60 00	1	Corpo interno	Inner body	Corps intérieur	Innengehäuse
	10	12 08 70 01	1	Cuscinetto reggispinta	Thrust bearing	Butée d'embrayage	Drucklager
	11	14 08 61 00	1	Corpo esterno	Outer body	Corps extérieur	Aussengehäuse
	12	90 70 61 70	1	Anello di tenuta	Seal ring	Bague d'étanchéité	Dichtring
	13	14 09 02 01	1	Leva rinvio comando frizione	Operating lever	Levier de dégagement	Ausrückhebel
	14	14 09 04 00	1	Vite registro leva	Adjusting screw	Vis de réglage	Einstellschraube
	15	92 60 25 08	1	Dado	Nut	Ecrou	Mutter
	16	94 32 11 05	1	Molla	Spring	Ressort	Feder
	17	95 78 02 22	1	Spina	Pin	Axe	Stift
	18	95 50 02 22	1	Copiglia	Cotter pin	Goupille	Splint
	19	90 40 27 36	1	Anello di tenuta	Seal ring	Bague d'étanchéité	Dichtring
	20	19 21 07 00	1	Albero di rinvio (Z 13)	Countershaft (Z 13)	Arbre intérm. (Z 13)	Vorgelegewelle (Z 13)
	21	90 40 06 10	1	Anello di tenuta	Seal ring	Bague d'étanchéité	Dichtring
	22	19 21 37 00	1	Distanziale	Spacer	Entretoise	Distanzstück
	23	90 70 61 88	1	Anello di tenuta	Seal ring	Bague d'étanchéité	Dichtring
	24	19 35 67 00	1	Dado di sicurezza	Nut	Ecrou	Mutter
	25	19 09 30 51	1	Trasmiss. com. frizione	Clutch cable	Câble d'embrayage	Kupplungskabel
	26	19 20 04 00	1	Campana frizione	Clutch housing	Boîtier d'embrayage	Kupplungsglocke
	27	93 18 02 20	1	Tappo	Plug	Bouchon	Stopfen
	28	92 20 11 20	1	Cuscinetto	Bearing	Roulement	Lager
	29	19 20 34 00	1	Piastra fiss. cuscin.	Plate	Plaque	Platte
	30	98 05 43 14	3	Vite	Screw	Vis	Schraube
	31	14 21 79 01	3	Rosetta di sicurezza	Washer	Rondelle	Scheibe
	32	98 62 03 30	11	Vite	Screw	Vis	Schraube
	33	98 62 04 35	6	Vite	Screw	Vis	Schraube

INDEX

BODY.....B9-B11
BUMPER GROUP.....B8

CLUTCH.....A5-A6
CLUTCH.....A13-A14
CONNECTING SYSTEM.A5-A6
CONTROLS.....B15-B19
COVERS.....A1-A2
CRANKCASE.....A1-A2
CYLINDER.....A3-A4
CYLINDER HEAD.....A3-A4

EXHAUST.....A8-A11
EXPORT VERSION
MODIFICATIONS.....D1-D2

FEEDING.....A8-A11
FORK.....B1
FRAME.....B5-B7
FRONT SUSPENSION..B12-B13
FRONT WHEEL.....B14

IGNITION.....C1-C4
INSTRUMENT PANEL..B18-B19

LIGHTING.....C5-C6
LUBRICATION.....A12

PEDAL.....B15-B17
PEDAL STARTER.....A15
POLICE VERSION....E1-E6

REAR SUSPENSION...B12-B13
REAR TRANSMISSION.B2-B4
REAR WHEEL.....B14

TIMING SYSTEM.....A7
TRANSMISSION.....A18-A20
TRANSMISSION CASE.A16-A17

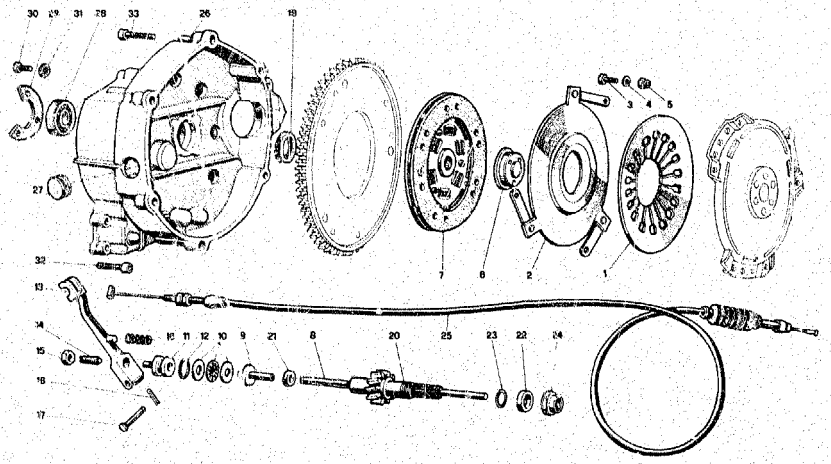

NOTE NOTES NOTES MARKE	POS. N.	N. COD. CODE No. No. CODE CODE Nr.	Q.tà Q.ty Q.té M.ge	DENOMINAZIONE	DESCRIPTION	DESIGNATION	BEZEICHNUNG
●				I sottonotati particolari rappresentano le varianti per il mod. V50 Following items refer to V50 mod. only Les pièces indiquées ci-dessous représentent les variantes pour le mod. V50 Die untergegebene Teile sind nur für Modell V50 gültig			
	20	19 21 07 50	1	Albero di rinvio (Z 14)	Countershaft (Z 14)	Arbre interm. (Z 14)	Vorgelegewelle (Z 14)

INDEX

BODY.....B9-B11
BUMPER GROUP.....B8

CLUTCH.....A5-A6
CLUTCH.....A13-A14
CONNECTING SYSTEM.A5-A6
CONTROLS.....B15-B19
COVERS.....A1-A2
CRANKCASE.....A1-A2
CYLINDER.....A3-A4
CYLINDER HEAD.....A3-A4

EXHAUST.....A8-A11
EXPORT VERSION
MODIFICATIONS.....D1-D2

FEEDING.....A8-A11
FORK.....B1
FRAME.....B5-B7
FRONT SUSPENSION..B12-B13
FRONT WHEEL.....B14

IGNITION.....C1-C4
INSTRUMENT PANEL..B18-B19

LIGHTING.....C5-C6
LUBRICATION.....A12

PEDAL.....B15-B17
PEDAL STARTER.....A15
POLICE VERSION....E1-E6

REAR SUSPENSION...B12-B13
REAR TRANSMISSION.B2-B4
REAR WHEEL.....B14

TIMING SYSTEM.....A7
TRANSMISSION.....A18-A20
TRANSMISSION CASE.A16-A17

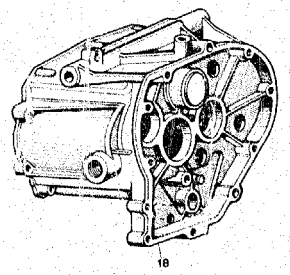

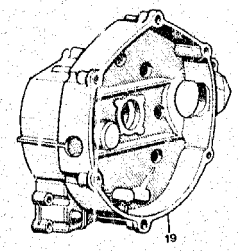

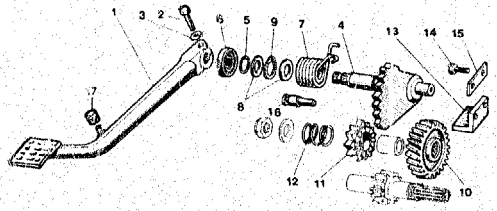

NOTE NOTES NOTES MARKE	POS. N	N. COD. CODE No. No. CODE CODE Nr.	Q.tà Q.ty Q.té M.gy	DENOMINAZIONE	DESCRIPTION	DESIGNATION	BEZEICHNUNG
	1	19 26 03 01	1	Leva com. avviamento	Starter control lever	Levier comm. démarr.	Starthebel
	2	98 05 24 30	1	Vite fiss. leva	Screw	Vis	Schraube
	3	95 00 42 08	1	Rondella	Washer	Rondelle	Scheibe
	4	19 26 40 00	1	Settore per messa in m.	Startersector	Secteur pour démarr.	Anlassersektor
	5	90 70 61 88	1	Anello di tenuta OR	Seal ring	Bague d'étanchéité	Dichtring
	6	90 40 18 32	1	Anello di tenuta	Seal ring	Bague d'étanchéité	Dichtring
	7	61 26 57 00	1	Molla	Spring	Ressort	Feder
	8	19 03 23 00	2	Rosetta di rasamento	Washer	Rondelle	Scheibe
	9	90 27 10 18	1	Anello seeger	Snap ring	Jonc d'arrêt	Seegerring
	10	19 21 11 05	1	Ingran. rinvio A.P. (V 35 Z = 25)	O.S. intermediate gear (V 35 Z = 25)	Engren. de renvoi A.P. (V 35 Z = 25)	Zahnradvorgel. H.W. (V 35 Z = 25)
	10	19 21 11 50	1	Ingran. rinvio A.P. (V 50 Z = 23)	O.S. intermediate gear (V 50 Z = 23)	Engren. de renvoi A.P. (V 50 Z = 23)	Zahnradvorgel. H.W. (V 50 Z = 23)
	11	19 26 66 01	1	Ingranaggio per messa in moto Z = 12	Starter gear Z = 12	Engrenage pour démarr. Z = 12	Anlasszahnrad Z = 12
	12	19 26 62 00	1	Molla	Spring	Ressort	Feder
	13	19 26 33 00	1	Tassello	Block	Goujon	Stück
	14	98 05 43 14	2	Vite	Screw	Vis	Schraube
	15	19 23 59 00	1	Piastrina di sicurezza	Lock plate	Plaquette frein	Schliessblech
	16	19 20 26 00	1	Perno	Pin	Axe	Stift
	17	14 42 38 00	1	Calotta in gomma	Rubber cap	Chapeau en caoutchouc	Gummischutzmuffe
	18	19 20 02 01	1	Scatola cambio	Transmission case	Carter de boîte à vit.	Getriebegehäuse
	19	19 20 04 01	1	Campana frizione	Clutch housing	Boîtier d'embrayage	Kupplungsglocke

INDEX

BODY.....B9-B11
BUMPER GROUP.....B8

CLUTCH.....A5-A6
CLUTCH.....A13-A14
CONNECTING SYSTEM.A5-A6
CONTROLS.....B15-B19
COVERS.....A1-A2
CRANKCASE.....A1-A2
CYLINDER.....A3-A4
CYLINDER HEAD.....A3-A4

EXHAUST.....A8-A11
EXPORT VERSION
MODIFICATIONS.....D1-D2

FEEDING.....A8-A11
FORK.....B1
FRAME.....B5-B7
FRONT SUSPENSION..B12-B13
FRONT WHEEL.....B14

IGNITION.....C1-C4
INSTRUMENT PANEL..B18-B19

LIGHTING.....C5-C6
LUBRICATION.....A12

PEDAL.....B15-B17
PEDAL STARTER.....A15
POLICE VERSION....E1-E6

REAR SUSPENSION...B12-B13
REAR TRANSMISSION.B2-B4
REAR WHEEL.....B14

TIMING SYSTEM.....A7
TRANSMISSION.....A18-A20
TRANSMISSION CASE.A16-A17

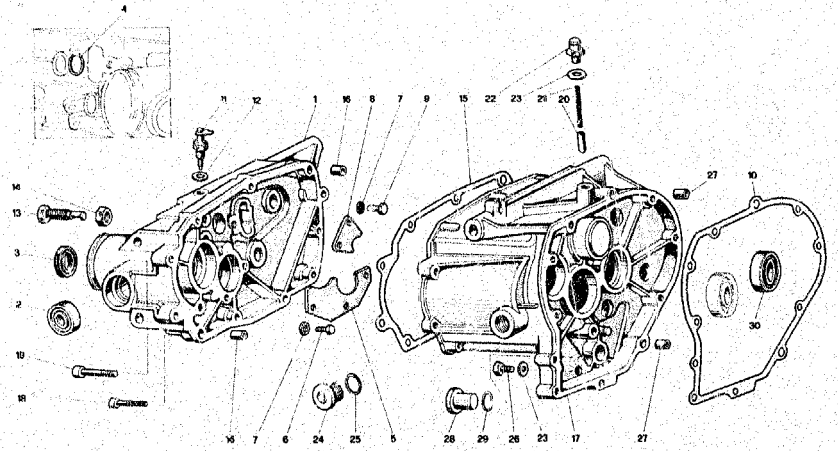

NOTE NOTES NOTES MARKE	POS. N.	N. COD. CODE No. No. CODE CODE Nr.	Q.tà Q.ty Q.té M.ge	DENOMINAZIONE	DESCRIPTION	DESIGNATION	BEZEICHNUNG
	1	19 20 08 00	1	Coperchio scatola	Transm. case cover	Couvercle du carter	Getriebedeckel
	2	92 20 42 15	2	Cuscinetto	Bearing	Roulement	Lager
	3	90 40 27 37	1	Anello di tenuta	Seal ring	Bague d'étanchéité	Dichtring
	4	90 70 61 40	1	Anello OR	Ring	Bague	Ring
	5	19 21 38 00	1	Piastra fiss. albero	Plate	Plaque	Platte
	6	98 05 43 14	3	Vite fiss. piastra	Screw	Vis	Schraube
	7	14 21 79 01	5	Rosetta di sicurezza	Washer	Rondelle	Scheibe
	8	19 23 58 00	1	Piastra fiss. albero	Plate	Plaque	Platte
	9	98 05 43 14	2	Vite	Screw	Vis	Schraube
	10	19 20 03 00	1	Guarnizione	Gasket	Joint	Dichtung
	11	19 20 72 00	1	Interruttore folle	Switch	Interrupteur	Schalter
	12	12 15 42 00	1	Guarnizione	Gasket	Joint	Dichtung
	13	19 23 78 00	1	Vite con eccentrico	Screw	Vis	Schraube
	14	92 60 25 12	1	Dado	Nut	Ecrou	Mutter
	15	19 20 11 00	1	Guarnizione	Gasket	Joint	Dichtung
	16	61 00 21 00	2	Bussola	Bush	Douille	Buchse
	17	19 20 02 00	1	Scatola cambio	Transmission case	Carter de boite à vit.	Getriebegehäuse
	18	98 62 03 30	7	Vite fiss. coperchio	Screw	Vis	Schraube
	19	98 62 04 35	4	Vite fiss. coperchio	Screw	Vis	Schraube
	20	65 23 47 00	1	Nottolino	Pawl	Rochet	Sperrlinke
	21	94 32 10 67	1	Molla	Spring	Ressort	Feder
	22	19 20 65 01	1	Tappo sfiato compl.	Vent plug. assy	Bouchon d'évent. compl.	Entlüftungsstopfen
	23	10 52 89 00	2	Guarnizione	Gasket	Joint	Dichtung
	24	19 35 12 00	1	Tappo introd. olio	Oil filler cap	Bouchon de rempl. huile	Oleinfüllstutzen
	25	90 70 62 03	1	Guarnizione	Gasket	Joint	Dichtung
	26	95 98 02 12	1	Tappo scarico olio	Oil drain plug	Bouchon de vid. huile	Ölablassschraube
	27	61 00 21 00	2	Boccola di riferim.	Bush	Douille	Buchse
	28	19 20 41 00	1	Tappo foro	Hole plug	Bouchon de trou	Lockstopfen
	29	90 40 18 32	1	Anello di tenuta	Seal ring	Bague d'étanchéité	Dichtring
	30	92 20 11 20	1	Cuscinetto	Bearing	Roulement	Lager
●	—	19 99 15 10	1	Cambio completo e campana	Transmission assy and housing	Boîte à vitesses compl. et carter	Schaltgetriebe, kpl. und Gehäuse

* Fornito sino ad esaurimento - Supplied until stock available - Fourni jusqu'à l'épuisement du stock - Lieferbar bis Lagerbestände

INDEX

BODY.....B9-B11
BUMPER GROUP.....B8

CLUTCH.....A5-A6
CLUTCH.....A13-A14
CONNECTING SYSTEM.A5-A6
CONTROLS.....B15-B19
COVERS.....A1-A2
CRANKCASE.....A1-A2
CYLINDER.....A3-A4
CYLINDER HEAD.....A3-A4

EXHAUST.....A8-A11
EXPORT VERSION
MODIFICATIONS.....D1-D2

FEEDING.....A8-A11
FORK.....B1
FRAME.....B5-B7
FRONT SUSPENSION..B12-B13
FRONT WHEEL.....B14

IGNITION.....C1-C4
INSTRUMENT PANEL..B18-B19

LIGHTING.....C5-C6
LUBRICATION.....A12

PEDAL.....B15-B17
PEDAL STARTER.....A15
POLICE VERSION....E1-E6

REAR SUSPENSION...B12-B13
REAR TRANSMISSION.B2-B4
REAR WHEEL.....B14

TIMING SYSTEM.....A7
TRANSMISSION.....A18-A20
TRANSMISSION CASE.A16-A17

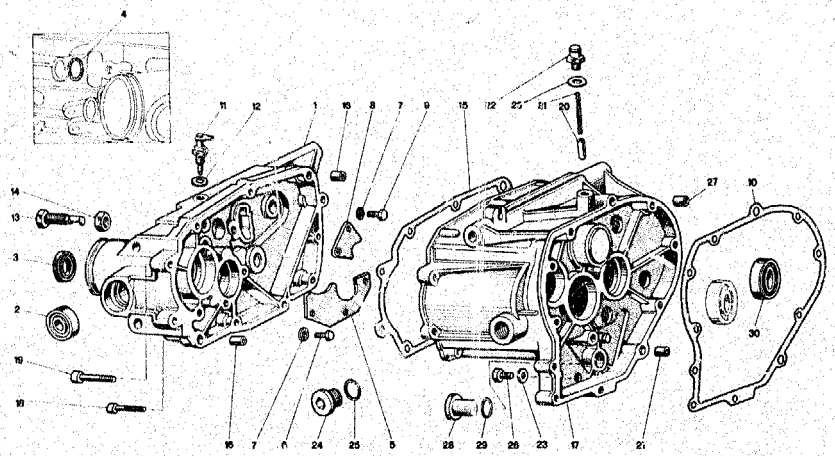

NOTE NOTES NOTES MARKE	POS. N.	N. COD. CODE No. No. CODE CODE Nr	Q.tà Q.ty Q.té M.ge	DENOMINAZIONE	DESCRIPTION	DESIGNATION	BEZEICHNUNG
●	–	19 99 15 50	1	Cambio completo e campana	Transmission assy and housing	Boîte à vitesses compl. et carter	Schaltgetriebe, kpl. und Gehäuse

● I sottonotati particolari rappresentano le varianti per il mod. V50
Following items refer to V50 mod. only
Les pièces indiquées ci-dessous représentent les variantes pour le mod. V50
Die untergegebene Teile sind nur für Modell V50 gültig

INDEX

BODY.....B9-B11
BUMPER GROUP.....B8

CLUTCH.....A5-A6
CLUTCH.....A13-A14
CONNECTING SYSTEM.A5-A6
CONTROLS.....B15-B19
COVERS.....A1-A2
CRANKCASE.....A1-A2
CYLINDER.....A3-A4
CYLINDER HEAD.....A3-A4

EXHAUST.....A8-A11
EXPORT VERSION
MODIFICATIONS.....D1-D2

FEEDING.....A8-A11
FORK.....B1
FRAME.....B5-B7
FRONT SUSPENSION..B12-B13
FRONT WHEEL.....B14

IGNITION.....C1-C4
INSTRUMENT PANEL..B18-B19

LIGHTING.....C5-C6
LUBRICATION.....A12

PEDAL.....B15-B17
PEDAL STARTER.....A15
POLICE VERSION....E1-E6

REAR SUSPENSION...B12-B13
REAR TRANSMISSION.B2-B4
REAR WHEEL.....B14

TIMING SYSTEM.....A7
TRANSMISSION.....A18-A20
TRANSMISSION CASE.A16-A17

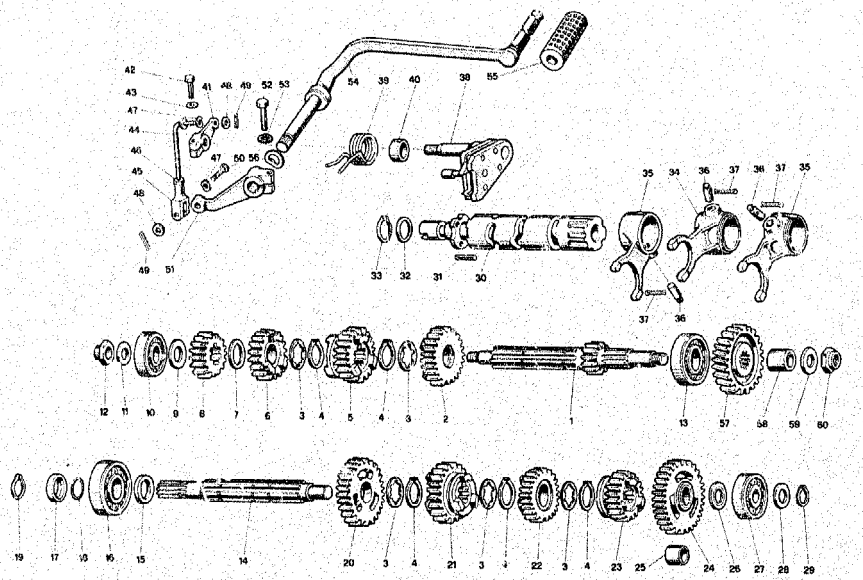

NOTE NOTES NOTES MARKE	POS. N.	N. COD. CODE No. No. CODE CODE Nr.	Q.tà Q.ty Q.té M.ge	DENOMINAZIONE	DESCRIPTION	DESIGNATION	BEZEICHNUNG
	1	19 21 05 01	2	Albero primario (Z = 11)	Main shaft (Z = 11)	Arbre primaire (Z = 11)	Antriebwelle (Z = 11)
	2	19 21 20 00	1	Ingranaggio 5a A.P. (Z = 22)	5th gear M.S. (Z = 22)	Pignon 5ème A.P. (Z = 22)	An.W. Schaltr. 5. Gang (Z = 22)
	3	39 21 54 00	5	Rosetta di rasamento	Washer	Rondelle	Scheibe
	4	90 27 11 23	5	Anello seeger	Ring	Jonc d'arrêt	Seegerring
	5	19 21 18 00	1	Ingranaggio 4a A.P. (Z = 22)	4th gear M.S. (Z = 22)	Pignon 4ème A.P. (Z = 22)	An.W. Schaltr. 4. Gang (Z = 22)
	6	19 21 14 00	1	Ingranaggio 3a A.P. (Z = 18)	3rd gear M.S. (Z = 18)	Pignon 3ème A.P. (Z = 18)	An.W. Schaltr. 3. Gang (Z = 18)
	7	19 21 46 00	1	Rosetta di rasamento	Washer	Rondelle	Scheibe
	8	19 21 13 00	1	Ingranaggio 2a A.P. (Z = 15)	2nd gear M.S. (Z = 15)	Pignon 2ème A.P. (Z = 15)	An.W. Schaltr. 2. Gang (Z = 15)
	9	19 21 28 00	1	Rosetta di spallamento	Washer	Rondelle	Scheibe
	10	92 20 14 15	1	Cuscinetto	Bearing	Roulement	Lager
	11	39 23 81 00	1	Rosetta di spallamento	Washer	Rondelle	Scheibe
	12	10 05 41 00	1	Dado	Nut	Ecrou	Mutter
	13	92 20 12 20	1	Cuscinetto	Bearing	Roulement	Lager
	14	19 21 36 00	1	Albero secondario	Layshalt	Arbre sécondaire	Abtriebwelle
	15	19 21 29 00	1	Distanziale	Spacer	Entretoise	Distanzstück
	16	92 20 12 20	1	Cuscinetto	Bearing	Roulement	Lager
	17	19 21 37 00	1	Distanziale	Spacer	Entretoise	Distanzstück
	18	90 70 61 88	1	Anello OR	Ring	Bague	Ring
	19	90 27 11 21	1	Anello Seeger	Ring	Jonc d'arrêt	Seegerring
	20	19 21 45 00	1	Ingranaggio 2a A.S. (Z = 26)	2nd gear L.S. (Z = 26)	Pignon 2ème A.S. (Z = 26)	Ab.W. Schaltr. 2. Gang (Z = 26)
	21	19 21 48 00	1	Ingranaggio 3a A.S. (Z = 23)	3rd gear A.S. (Z = 23)	Pignon 3ème A.S. (Z = 23)	Ab.W. Schaltr. 3. Gang (Z = 23)
	22	19 21 51 00	1	Ingranaggio 4a A.S. (Z = 23)	4th gear L.S. (Z = 23)	Pignon 4ème A.S. (Z = 23)	Ab.W. Schaltr. 4. Gang (Z = 23)
	23	19 21 52 00	1	Ingranaggio 5a A.S. (Z = 20)	5th gear L.S. (Z = 20)	Pignon 5ème A.S. (Z = 20)	Ab.W. Schaltr. 5. Gang (Z = 20)
	24	19 21 40 00	1	Ingranaggio 1a A.S. (Z = 30)	1st gear L.S. (Z = 30)	Pignon 1ère A.S. (Z = 30)	Ab.W. Schaltr. 1. Gang (Z = 30)
	25	19 21 41 00	1	Boccola	Bush	Douille	Buchse
	26	43 07 09 40	1	Rosetta di spallam.	Washer	Roncelle	Scheibe
	27	92 20 14 15	1	Cuscinetto	Bearing	Roulement	Lager
	28	39 23 93 00	1	Rosetta di spallam.	Washer	Rondelle	Scheibe

INDEX

BODY.....B9-B11
BUMPER GROUP.....B8

CLUTCH.....A5-A6
CLUTCH.....A13-A14
CONNECTING SYSTEM.A5-A6
CONTROLS.....B15-B19
COVERS.....A1-A2
CRANKCASE.....A1-A2
CYLINDER.....A3-A4
CYLINDER HEAD.....A3-A4

EXHAUST.....A8-A11
EXPORT VERSION
MODIFICATIONS.....D1-D2

FEEDING.....A8-A11
FORK.....B1
FRAME.....B5-B7
FRONT SUSPENSION..B12-B13
FRONT WHEEL.....B14

IGNITION.....C1-C4
INSTRUMENT PANEL..B18-B19

LIGHTING.....C5-C6
LUBRICATION.....A12

PEDAL.....B15-B17
PEDAL STARTER.....A15
POLICE VERSION....E1-E6

REAR SUSPENSION...B12-B13
RFAR TRANSMISSION.B2-B4
REAR WHEEL.....B14

TIMING SYSTEM.....A7
TRANSMISSION.....A18-A20
TRANSMISSION CASE.A16-A17

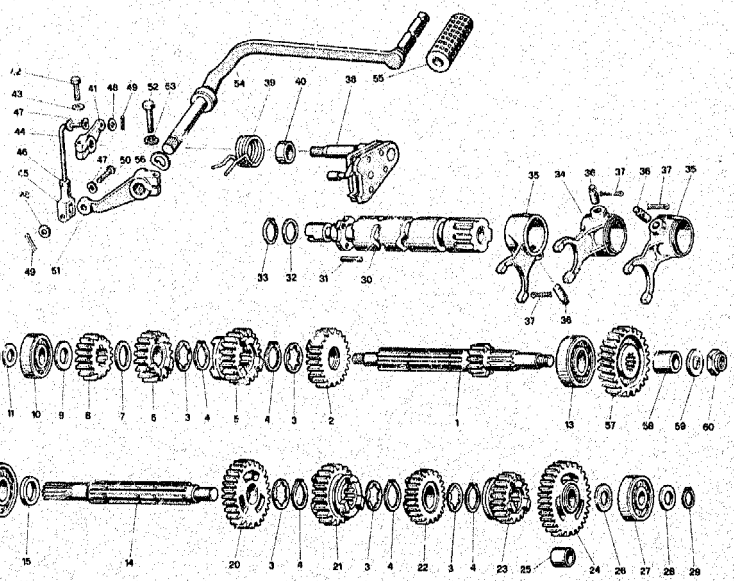

NOTE NOTES NOTES MARKE	POS. N.	N. COD. CODE No. No. CODE CODE Nr.	Q.tà Q.ty Q.té M.ge	DENOMINAZIONE	DESCRIPTION	DESIGNATION	BEZEICHNUNG
	29	90 27 11 15	1	Anello Seeger	Ring	Bague	Seegerring
	30	19 23 44 00	1	Albero desmodromico	Splined shaft	Arbre desmodrom.	Keilwelle
	31	19 23 46 00	4	Piolo	Pin	Goupille	Stift
	32	19 35 53 00	1	Rosetta di spallam.	Washer	Rondelle	Scheibe
	33	90 27 10 20	1	Anello Seeger	Ring	Bague	Seegerring
	34	19 23 12 00	1	Forcellino per A.P.	M.S. fork	Axe de fourch. A.P.	An.W. Schaltgabel
	35	19 23 10 00	2	Forcellino per A.S.	L.S. fork	Axe de fourch. A.S.	Ab.W. Schaltgabel
	36	39 23 52 00	3	Rullo	Roller	Rouleau	Walze
	37	95 40 13 20	3	Copiglia	Cotter pin	Goupille	Splint
	38	19 23 62 00	1	Preselettore compl.	Preselection compl.	Présélecteur compl.	Vorwall. kpl.
	39	61 23 82 00	1	Molla	Spring	Ressort	Feder
	40	91 18 20 10	1	Boccola	Bush	Douille	Buchse
	41	19 25 82 00	1	Leva com. preselettore	Lever	Levier	Hebel
	42	98 05 23 25	1	Vite	Screw	Vis	Schraube
	43	95 02 11 06	1	Rosetta	Washer	Rondelle	Scheibe
	44	19 25 78 00	1	Tirante	Rod	Tige	Schaltstange
	45	12 62 68 00	1	Forcellino	Fork	Fourchette	Gabel
	46	92 60 22 06	1	Dado	Nut	Ecrou	Mutter
	47	95 12 91 10	2	Ranella antivibrante	Washer	Rondelle	Scheibe
	48	95 00 42 06	1	Ranella piana	Washer	Rondelle	Scheibe
	49	95 50 02 22	2	Copiglia	Cotter pin	Goupille	Splint
	50	95 78 02 65	1	Spina per forcellino	Pin	Axe	Stift
	51	19 25 69 00	1	Leva di rinvio	Lever	Levier	Hebel
	52	98 05 23 25	1	Vite	Screw	Vis	Schraube
	53	95 02 11 06	1	Ranella	Washer	Rondelle	Scheibe
	54	19 25 09 00	1	Leva cambio	Transmission lever	Levier de boite à vit.	Schalthebel
	55	14 25 10 01	1	Pedalino gomma	Rubber protection	Couvre-pédale	Gummiüberzug
	56	95 12 92 60	1	Ranella elastica	Spring washer	Rondelle élastique	Federscheibe
	57	19 21 11 01	1	Ingranaggio rinvio A.P. (Z = 24)	Idle gear M.S. (Z = 24)	Pignon intermédiaire (Z = 24)	Zahnradvorgelege (Z = 24)
	58	19 26 67 00	1	Boccola	Bush	Douille	Buchse
	59	39 23 81 00	1	Rosetta di spallam.	Washer	Rondelle	Scheibe
	60	10 05 41 00	1	Dado	Nut	Ecrou	Mutter

INDEX

BODY.....B9-B11
BUMPER GROUP.....B8

CLUTCH.....A5-A6
CLUTCH.....A13-A14
CONNECTING SYSTEM.A5-A6
CONTROLS.....B15-B19
COVERS.....A1-A2
CRANKCASE.....A1-A2
CYLINDER.....A3-A4
CYLINDER HEAD.....A3-A4

EXHAUST.....A8-A11
EXPORT VERSION
MODIFICATIONS.....D1-D2

FEEDING.....A8-A11
FORK.....B1
FRAME.....B5-B7
FRONT SUSPENSION..B12-B13
FRONT WHEEL.....B14

IGNITION.....C1-C4
INSTRUMENT PANEL..B18-B19

LIGHTING.....C5-C6
LUBRICATION.....A12

PEDAL.....B15-B17
PEDAL STARTER.....A15
POLICE VERSION....E1-E6

REAR SUSPENSION...B12-B13
REAR TRANSMISSION.B2-B4
REAR WHEEL.....B14

TIMING SYSTEM.....A7
TRANSMISSION.....A18-A20
TRANSMISSION CASE.A16-A17

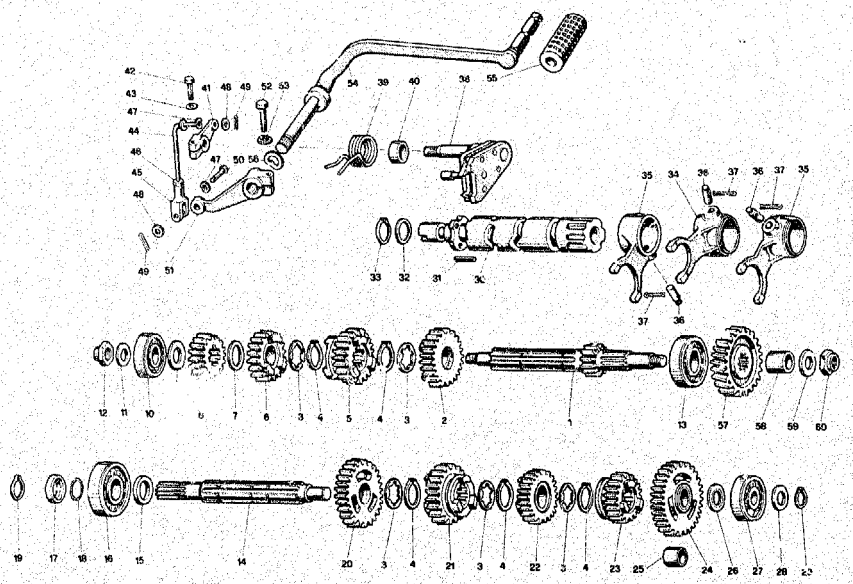

NOTE NOTES NOTES MARKE	POS. N.	N. COD. CODE No. No. CODE CODE Nr.	Q.tà Q.ty Q.té M.ge	DENOMINAZIONE	DESCRIPTION	DESIGNATION	BEZEICHNUNG

● I sottonotati particolari rappresentano le varianti per il mod. V50
Following items refer to V50 mod. only
Les pièces indiquées ci-dessous représentent les variantes pour le mod. V50
Die untergegebene Teile sind nur für Modell V50 gültig

57	19 21 11 51	1	Ingranaggio rinvio A.P. (Z = 23)	Idle gear M. S. (Z = 23)	Pignon intermédiaire (Z = 23)	Zahnradvorgelege (Z = 23)

INDEX

BODY.....B9-B11
BUMPER GROUP.....B8

CLUTCH.....A5-A6
CLUTCH.....A13-A14
CONNECTING SYSTEM.A5-A6
CONTROLS.....B15-B19
COVERS.....A1-A2
CRANKCASE.....A1-A2
CYLINDER.....A3-A4
CYLINDER HEAD.....A3-A4

EXHAUST.....A8-A11
EXPORT VERSION
MODIFICATIONS.....D1-D2

FEEDING.....A8-A11
FORK.....B1
FRAME.....B5-B7
FRONT SUSPENSION..B12-B13
FRONT WHEEL.....B14

IGNITION.....C1-C4
INSTRUMENT PANEL..B18-B19

LIGHTING.....C5-C6
LUBRICATION.....A12

PEDAL.....B15-B17
PEDAL STARTER.....A15
POLICE VERSION....E1-E6

REAR SUSPENSION...B12-B13
REAR TRANSMISSION.B2-B4
REAR WHEEL.....B14

TIMING SYSTEM.....A7
TRANSMISSION.....A18-A20
TRANSMISSION CASE.A16-A17

FORCELLONE
FORK
FOURCHE
GABEL

V35-V50

Tavola - Drawing 10
Table - Bild

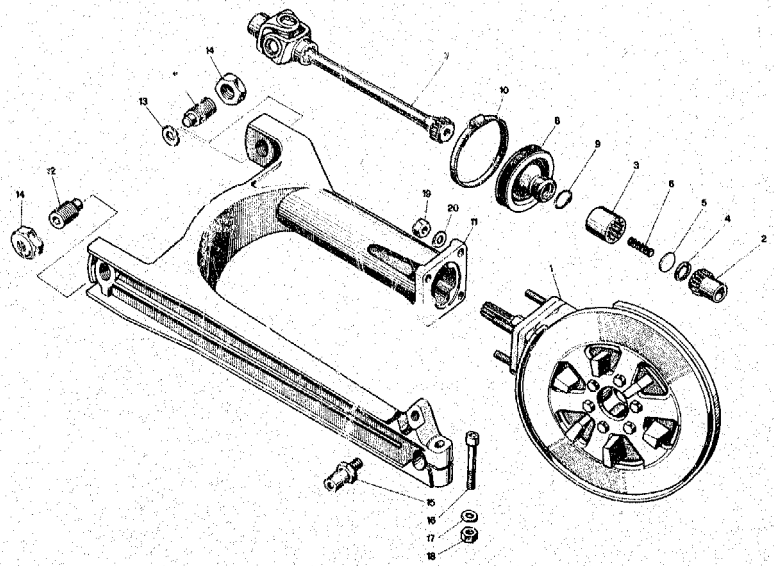

NOTE NOTES NOTES MARKE	POS. N.	N. COD. CODE No. No. CODE CODE Nr	Q.tà Q.ty Q.té Mge	DENOMINAZIONE	DESCRIPTION	DESIGNATION	BEZEICHNUNG
	1	19 35 02 00	1	Scatola trasmiss. comp.	Transmission compl.	Carter de transm. compl.	Kübertragungsgehäuse
	2	19 32 77 01	1	Manicotto	Sleeve	Manchon	Manschette
	3	19 32 88 01	1	Manicotto collegam.	Sleeve	Manchon	Manschette
	4	90 77 20 23	1	Anello Seeger	Circlip	Jonc d'arrêt	Seegerring
	5	19 32 76 01	1	Dischetto	Disc	Disque	Scheibe
	6	94 32 10 99	1	Molla	Spring	Ressort	Feder
	7	19 32 80 01	1	Giunto cardanico	Joint	Joint	Verbindung
	8	19 54 80 01	1	Soffietto di protez.	Bellows	Soufflet	Faltenbag
	9	19 54 91 01	1	Molla	Spring	Ressort	Feder
	10	12 54 82 01	1	Fascetta	Clamp	Collier	Schelle
	11	19 54 02 00	1	Forcellone oscillante	Rear fork	Fourche AR	Hintergabel
	12	19 54 70 00	2	Perno	Pin	Goujon	Stift
	13	35 21 41 00	1	Rondella di spessore	Washer	Rondelle	Scheibe
	14	14 54 78 00	2	Dado	Nut	Ecrou	Mutter
	15	19 55 52 00	1	Perno fiss. sospens.	Pin	Goujon	Stift
	16	98 05 25 50	1	Vite	Screw	Vis	Schraube
	17	95 00 42 10	1	Rondella	Washer	Rondelle	Scheibe
	18	92 60 22 10	1	Dado	Nut	Ecrou	Mutter
	19	92 78 10 81	4	Dado cieco	Nut	Ecrou	Mutter
	20	14 61 59 01	4	Rondella	Washer	Rondelle	Scheibe

INDEX

BODY.....B9-B11
BUMPER GROUP.....B8

CLUTCH.....A5-A6
CLUTCH.....A13-A14
CONNECTING SYSTEM.A5-A6
CONTROLS.....B15-B19
COVERS.....A1-A2
CRANKCASE.....A1-A2
CYLINDER.....A3-A4
CYLINDER HEAD.....A3-A4

EXHAUST.....A8-A11
EXPORT VERSION
MODIFICATIONS.....D1-D2

FEEDING.....A8-A11
FORK.....B1
FRAME.....B5-B7
FRONT SUSPENSION..B12-B13
FRONT WHEEL.....B14

IGNITION.....C1-C4
INSTRUMENT PANEL..B18-B19

LIGHTING.....C5-C6
LUBRICATION.....A12

PEDAL.....B15-B17
PEDAL STARTER.....A15
POLICE VERSION....E1-E6

REAR SUSPENSION...B12-B13
REAR TRANSMISSION.B2-B4
REAR WHEEL.....B14

TIMING SYSTEM.....A7
TRANSMISSION.....A18-A20
TRANSMISSION CASE.A16-A17

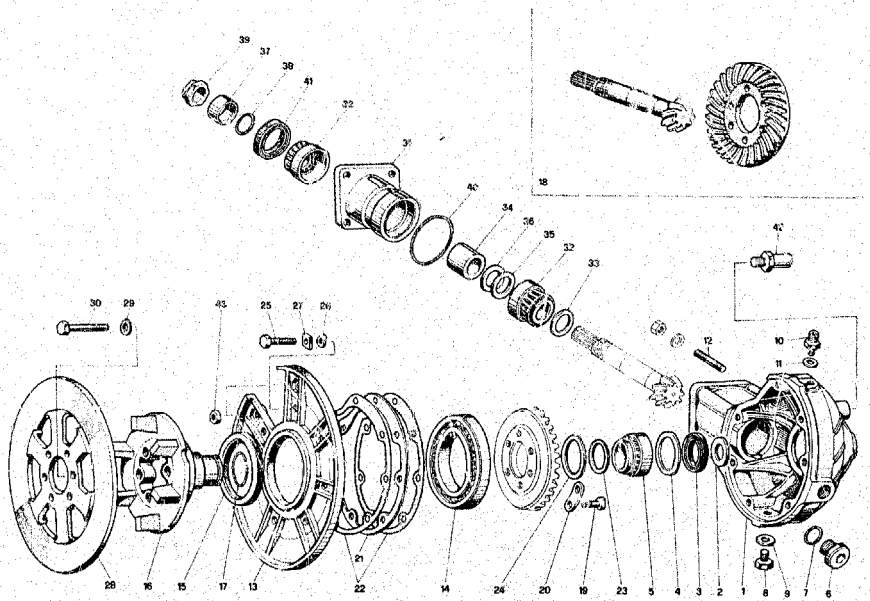

NOTE NOTES NOTES MARKE	POS. N	N. COD. CODE No. No. CODE CODE Nr.	Q.tà Q.ty Q.té Mge	DENOMINAZIONE	DESCRIPTION	DESIGNATION	BEZEICHNUNG
	1	19 35 03 00	1	Scatola trasmiss. nuda	Transmiss. housing	Carter de transmission	Kubertragungsgehäuse
	2	19 35 19 00	1	Rondella di spallam.	Washer	Rondelle	Scheibe
	3	90 40 35 47	1	Anello di tenuta	Seal ring	Bague d'étanchéité	Dichtring
	4	19 35 11 00	1	Rondella di spallam.	Washer	Rondelle	Scheibe
	5	92 25 22 35	1	Cuscinetto a rulli	Roller bearing	Roulement à rouleaux	Rollenlager
	6	19 35 12 00	1	Tappo livello olio	Oil level plug	Bouchon d'huile	Ölstandpfopfen
	7	90 70 62 03	1	Guarnizione	Gasket	Joint	Dichtung
	8	95 98 02 12	1	Tappo scarico olio	Oil drain plug	Bouchon de vid. huile	Ölablassschraube
	9	10 52 89 00	1	Rondella alluminio	Washer	Rondelle	Scheibe
	10	19 20 65 01	1	Tappo sfiato compl.	Breather	Reniflard	Entluftungsschlauch
	11	10 52 89 00	1	Guarnitione	Gasket	Joint	Dichtung
	12	96 50 80 45	4	Prigioniero	Stud bolt	Goujon	Stiftschraube
	13	19 35 04 01	1	Coperchio	Cover	Couvercle	Deckel
	14	92 20 10 70	1	Cuscinetto a sfere	Ball bearing	Roulement à billes	Kugellager
	15	90 40 75 90	1	Anello di tenuta	Seal ring	Bague d'étanchéité	Dichtring
	16	19 35 14 01	1	Perno	Pin	Goujon	Stift
	17	90 35 30 30	1	Anello di fermo	Retaining ring	Bague d'arrêt	Sperring
	18	19 35 46 01	1	Coppia conica (Z = 8/31)	Bevel gear (Z = 8/31)	Couple conique (Z = 8/31)	Tellerradsatz (Z = 8/31)
	19	12 06 77 01	6	Vite fiss. corona	Screw	Vis	Schraube
	20	19 35 64 01	3	Piastrina di sicurezza	Lock plate	Plaquette frein	Schliessblech
	21	19 35 54 00	1	Spessore di regolazione mm 0,8	Shim mm 0.8	Cale d'épaisseur mm 0,8	Ausgleichscheibe mm 0,8
	21	19 35 54 02	1	Spessore di regolazione mm 0,9	Shim mm 0.9	Cale d'épaisseur mm 0,9	Ausgleichscheibe mm 0,9
	21	19 35 54 04	1	Spessore di regolazione mm 1	Shim mm 1	Cale d'épaisseur mm 1	Ausgleichscheibe mm 1
	21	19 35 54 06	1	Spessore di regolazione mm 1,1	Shim mm 1.1	Cale d'épaisseur mm 1,1	Ausgleichscheibe mm 1,1
	21	19 35 54 08	1	Spessore di regolazione mm 1,2	Shim mm 1.2	Cale d'épaisseur mm 1,2	Ausgleichscheibe mm 1,2
	21	19 35 54 10	1	Spessore di regolazione mm 1,3	Shim mm 1.3	Cale d'épaisseur mm 1,3	Ausgleichscheibe mm 1,3
	21	19 35 54 11	1	Spessore di regolazione mm 1,4	Shim mm 1.4	Cale d'épaisseur mm 1,4	Ausgleichscheibe mm 1,4
	21	19 35 54 12	1	Spessore di regolazione mm 1,5	Shim mm 1.5	Cale d'épaisseur mm 1,5	Ausgleichscheibe mm 1,5

INDEX

BODY.....B9-B11
BUMPER GROUP.....B8

CLUTCH.....A5-A6
CLUTCH.....A13-A14
CONNECTING SYSTEM.A5-A6
CONTROLS.....B15-B19
COVERS.....A1-A2
CRANKCASE.....A1-A2
CYLINDER.....A3-A4
CYLINDER HEAD.....A3-A4

EXHAUST.....A8-A11
EXPORT VERSION
MODIFICATIONS.....D1-D2

FEEDING.....A8-A11
FORK.....B1
FRAME.....B5-B7
FRONT SUSPENSION..B12-B13
FRONT WHEEL.....B14

IGNITION.....C1-C4
INSTRUMENT PANEL..B18-B19

LIGHTING.....C5-C6
LUBRICATION.....A12

PEDAL.....B15-B17
PEDAL STARTER.....A15
POLICE VERSION....E1-E6

REAR SUSPENSION...B12-B13
REAR TRANSMISSION.B2-B4
REAR WHEEL.....B14

TIMING SYSTEM.....A7
TRANSMISSION.....A18-A20
TRANSMISSION CASE.A16-A17

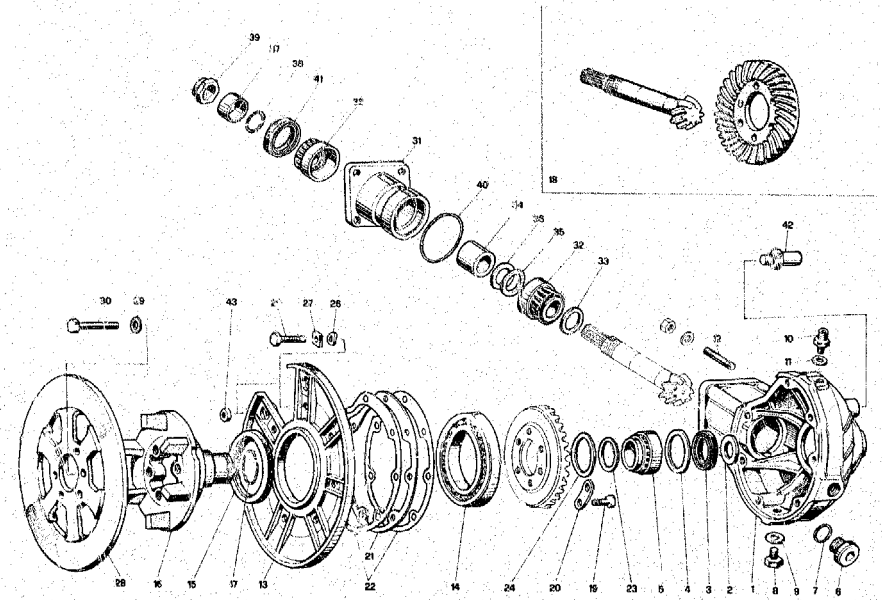

NOTE NOTES NOTES MARKE	POS. N.	N. COD. CODE No. No. CODE CODE Nr	Q.tà Q.ty Q.té Mge	DENOMINAZIONE	DESCRIPTION	DESIGNATION	BEZEICHNUNG
	21	19 35 54 13	1	Spessore di regolazione mm 1.6	Shim mm 1.6	Cale d'épaisseur mm 1,6	Ausgleichscheibe mm 1,6
	22	19 35 07 00	2	Guarnizione	Gasket	Joint	Dichtung
	23	19 35 23 00	1	Rondella di rasam.	Washer	Rondelle	Scheibe
	24	19 35 35 00	1	Rondella di rasam.	Washer	Rondelle	Scheibe
	25	98 05 44 25	7	Vite fiss. coperchio	Screw	Vis	Schraube
	26	61 27 03 00	7	Rosetta elast. ondul.	Tooth washer	Rondelle dentée	Zahnscheibe
	27	95 18 70 08	7	Piastrina di sicurezza	Lock plate	Plaquette frein	Schliessblech
	28	19 63 57 00	1	Disco freno poster.	Rear brake disc	Disque frein AR	Hint. Bremsscheibe
	29	14 61 59 01	6	Rondella di sicurezza	Washer	Rondelle	Scheibe
	30	98 05 44 18	6	Vite fiss. disco	Screw	Vis	Schraube
	31	19 35 24 01	1	Custodia	Flange	Flasque	Flansch
	32	92 24 92 20	2	Cuscinetto a rulli	Roller bearing	Roulement à rouleaux	Rollenlager
	33	19 35 53 00	1-2	Spessore per pignone mm 1	Pinion shim mm 1	Cale d'épaisseur mm 1	Ausgleichscheibe mm 1
	33	19 35 53 01	1-2	Spessore per pignone mm 1,1	Pinion shim mm 1.1	Cale d'épaisseur mm 1,1	Ausgleichscheibe mm 1,1
	33	19 35 53 02	1-2	Spessore per pignone mm 1,2	Pinion shim mm 1.2	Cale d'épaisseur mm 1,2	Ausgleichscheibe mm 1,2
	33	19 35 53 03	1-2	Spessore per pignone mm 1,3	Pinion shim mm 1.3	Cale d'épaisseur mm 1,3	Ausgleichscheibe mm 1,3
	33	19 35 53 04	1-2	Spessore per pignone mm 1,4	Pinion shim mm 1.4	Cale d'épaisseur mm 1,4	Ausgleichscheibe mm 1,4
	33	19 35 53 05	1-2	Spessore per pignone mm 1,5	Pinion shim mm 1.5	Cale d'épaisseur mm 1,5	Ausgleichscheibe mm 1,5
	33	19 35 53 06	1-2	Spessore per pignone mm 1,6	Pinion shim mm 1.6	Cale d'épaisseur mm 1,6	Ausgleichscheibe mm 1,6
	33	19 35 53 07	1-2	Spessore per pignone mm 1,7	Pinion shim mm 1.7	Cale d'épaisseur mm 1,7	Ausgleichscheibe mm 1,7
	33	19 35 53 08	1-2	Spessore per pignone mm 1,8	Pinion shim mm 1.8	Cale d'épaisseur mm 1,8	Ausgleichscheibe mm 1,8
	33	19 35 53 09	1-2	Spessore per pignone mm 1,9	Pinion shim mm 1.9	Cale d'épaisseur mm 1,9	Ausgleichscheibe mm 1,9
	34	19 35 51 00	1	Distanziale	Spacer	Entretoise	Distanzstück
	35	19 35 52 00	1-2	Rosetta regolazione mm 0,1	Shim mm 0.1	Rondelle d'ajustement mm 0,1	Passscheibe mm 0,1
	36	19 35 52 02	1-11	Rosetta regolazione mm 0,15	Shim mm 0.15	Rondelle d'ajustement mm 0.15	Passscheibe mm 0.15

INDEX

BODY.....B9-B11
BUMPER GROUP.....B8

CLUTCH.....A5-A6
CLUTCH.....A13-A14
CONNECTING SYSTEM.A5-A6
CONTROLS.....B15-B19
COVERS.....A1-A2
CRANKCASE.....A1-A2
CYLINDER.....A3-A4
CYLINDER HEAD.....A3-A4

EXHAUST.....A8-A11
EXPORT VERSION
MODIFICATIONS.....D1-D2

FEEDING.....A8-A11
FORK.....B1
FRAME.....B5-B7
FRONT SUSPENSION..B12-B13
FRONT WHEEL.....B14

IGNITION.....C1-C4
INSTRUMENT PANEL..B18-B19

LIGHTING.....C5-C6
LUBRICATION.....A12

PEDAL.....B15-B17
PEDAL STARTER.....A15
POLICE VERSION....E1-E6

REAR SUSPENSION...B12-B13
REAR TRANSMISSION.B2-B4
REAR WHEEL.....B14

TIMING SYSTEM.....A7
TRANSMISSION.....A18-A20
TRANSMISSION CASE.A16-A17

TRASMISSIONE POSTERIORE
REAR TRANSMISSION
TRANSMISSION AR
HINT. KRAFTÜBERTRAGUNG

V35-V50

Tavola - Drawing
Table - Bild
11

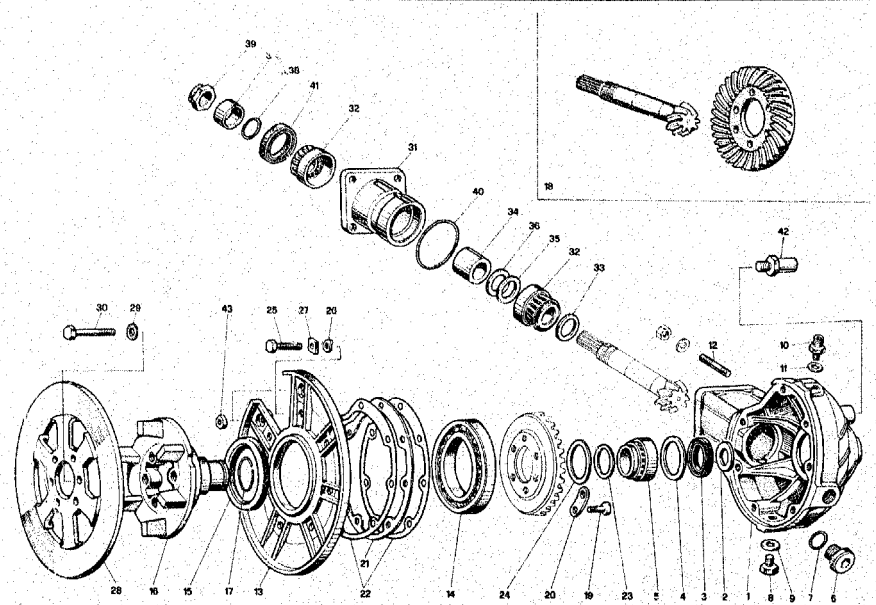

NOTE NOTES NOTES MARKE	POS. N.	N. COD. CODE No. No. CODE CODE Nr.	Q.tà Q.ty Q.té M.ge	DENOMINAZIONE	DESCRIPTION	DESIGNATION	BEZEICHNUNG
	37	19 35 68 01	1	Distanziale	Spacer	Entretoise	Distanzstück
	38	90 70 61 08	1	Anello di tenuta	Seal ring	Bague d'étanchéité	Dichtring
	39	19 36 67 00	1	Dado bloccaggio	Nut	Ecrou	Mutter
	40	90 70 65 52	1	Guarnizione	Gasket	Joint	Dichtung
	41	90 40 32 47	1	Anello di tenuta	Seal ring	Bague d'étanchéité	Dichtring
	42	19 55 52 00	1	Perno fiss. sospens.	Pin	Goujon	Stift
	43	92 60 22 08	2	Dado	Nut	Ecrou	Mutter

INDEX

BODY.....D9-B11
BUMPER GROUP.....B8

CLUTCH.....A5-A6
CLUTCH.....A13-A14
CONNECTING SYSTEM.A5-A6
CONTROLS.....B15-B19
COVERS.....A1-A2
CRANKCASE.....A1-A2
CYLINDER.....A3-A4
CYLINDER HEAD.....A3-A4

EXHAUST.....A8-A11
EXPORT VERSION
MODIFICATIONS.....D1-D2

FEEDING.....A8-A11
FORK.....B1
FRAME.....B5-B7
FRONT SUSPENSION..B12-B13
FRONT WHEEL.....B14

IGNITION.....C1-C4
INSTRUMENT PANEL..B18-B19

LIGHTING.....C5-C6
LUBRICATION.....A12

PEDAL.....B15-B17
PEDAL STARTER.....A15
POLICE VERSION....E1-E6

REAR SUSPENSION...B12-B13
REAR TRANSMISSION.B2-B4
REAR WHEEL.....B14

TIMING SYSTEM.....A7
TRANSMISSION.....A18-A20
TRANSMISSION CASE.A16-A17

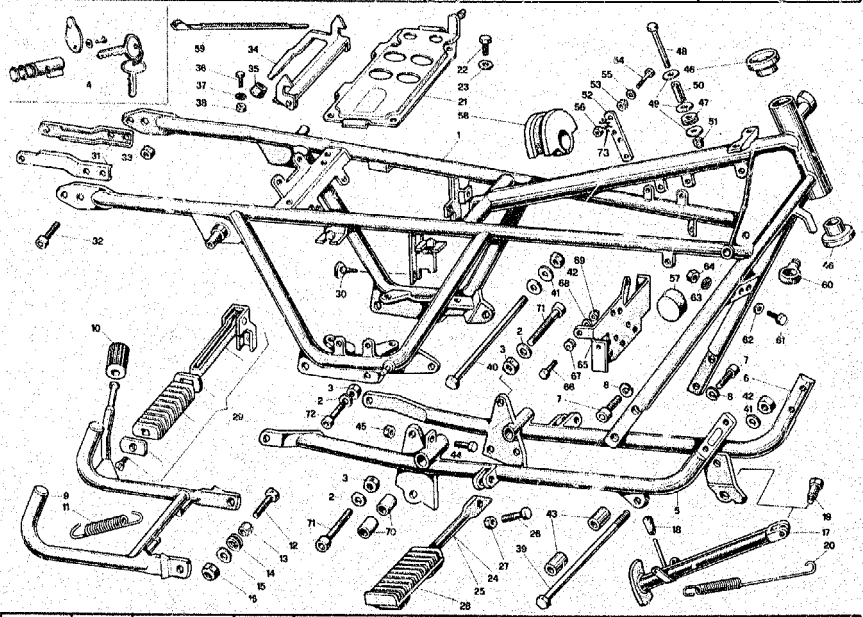

NOTE NOTES NOTES MARKE	POS. N.	N. COD. CODE No. No. CODE CODE Nr.	Q.tà Q.ty Q.té M.ge	DENOMINAZIONE	DESCRIPTION	DESIGNATION	BEZEICHNUNG
	1	19 40 01 00	1	Telaio completo	Frame, assy	Châssis complet	Rahmen, kpl.
	2	95 00 42 10	4	Rondella	Washer	Rondelle	Scheibe
	3	92 60 22 10	4	Dado	Nut	Ecrou	Mutter
	4	39 78 25 00	1	Antifurto con chiavi	Anti-theft with keys	Antivol avec clés	Diebstahlschutz mit Schl.
	5	19 42 03 00	1	Braccio culla destro	R.H. arm	Bras D	Arm R.
	6	19 42 21 00	1	Braccio culla sinistro	L.H. arm	Bras G	Arm, L.
	7	98 62 25 22	4	Vite	Screw	Vis	Schraube
	8	95 12 01 05	4	Rondella elastica	Spring washer	Rondelle élastique	Federscheibe
	9	19 43 03 00	1	Cavalletto	Stand	Béquille	Ständer
	10	19 43 26 40	1	Pedalino in gomma	Rubber foot rest	Caoutch. de rep.-pieds	Fussrastegummi
	11	12 43 40 01	2	Molla	Spring	Ressort	Feder
	12	98 05 45 30	2	Vite	Screw	Vis	Schraube
	13	91 18 11 11	2	Distanziale	Spacer	Entretoise	Distanzstück
	14	94 32 22 15	1	Molla	Spring	Ressort	Feder
	15	95 00 02 10	2	Rondella	Washer	Rondelle	Scheibe
	16	92 60 05 10	2	Dado	Nut	Ecrou	Mutter
	17	19 43 20 00	1	Puntone laterale	Side bar	Tirant latéral	Seitenstange
	18	19 43 30 00	1	Gommino	Rubber	Caoutchouc	Gummistück
	19	99 10 51 29	1	Perno	Pin	Goujon	Stift
	20	19 43 40 00	2	Molla	Spring	Ressort	Feder
	21	19 41 82 00	1	Piastra porta batteria	Plate	Plaque	Platte
	22	98 05 44 18	4	Vite	Screw	Vis	Schraube
	23	95 00 42 08	4	Rosetta piana	Washer	Rondelle	Scheibe
	24	39 44 07 00	1	Tubo dx portapedana	R.H. pipe	Tuyau D	Rohr, R.
	25	39 44 18 00	1	Tubo sx portapedana	L.H. pipe	Tuyau G	Rohr, L.
	26	98 82 04 30	2	Vite	Screw	Vis	Schraube
	27	92 60 22 08	2	Dado	Nut	Ecrou	Mutter
	28	39 44 32 00	2	Pedana appoggiapiedi	Foot rest	Repose-pieds	Fussraste
	29	61 44 23 00	2	Pedana appoggiap. post.	Rear foot rest	Repose-pieds AR	Hint. Fussraste
	30	19 70 55 00	4	Tappo	Plug	Bouchon	Stopfen
	31	19 43 91 00	2	Supporto paraf. post.	Rear fender bracket	Support d'aile AR	Hint. Kotflügelstütze
	32	98 82 24 18	4	Vite	Screw	Vis	Schraube
	33	92 63 05 08	4	Dado autobloccante	Self-locking nut	Ecrou à autoblocage	Hutmutter
	34	19 45 20 50	1	Arpione blocc. sella	Pawl	Rochet	Sperrklinke
	35	61 46 23 00	1	Gommino	Rubber	Caoutchouc	Gummistück
	36	98 05 43 12	2	Vite	Screw	Vis	Schraube

INDEX

BODY.....B9-B11
BUMPER GROUP.....B8

CLUTCH.....A5-A6
CLUTCH.....A13-A14
CONNECTING SYSTEM.A5-A6
CONTROLS.....B15-B19
COVERS.....A1-A2
CRANKCASE.....A1-A2
CYLINDER.....A3-A4
CYLINDER HEAD.....A3-A4

EXHAUST.....A8-A11
EXPORT VERSION
MODIFICATIONS.....D1-D2

FEEDING.....A8-A11
FORK.....B1
FRAME.....B5-B7
FRONT SUSPENSION..B12-B13
FRONT WHEEL.....B14

IGNITION.....C1-C4
INSTRUMENT PANEL..B18-B19

LIGHTING.....C5-C6
LUBRICATION.....A12

PEDAL.....B15-B17
PEDAL STARTER.....A15
POLICE VERSION....E1-E6

REAR SUSPENSION...B12-B13
REAR TRANSMISSION.B2-B4
REAR WHEEL.....B14

TIMING SYSTEM.....A7
TRANSMISSION.....A18-A20
TRANSMISSION CASE.A16-A17

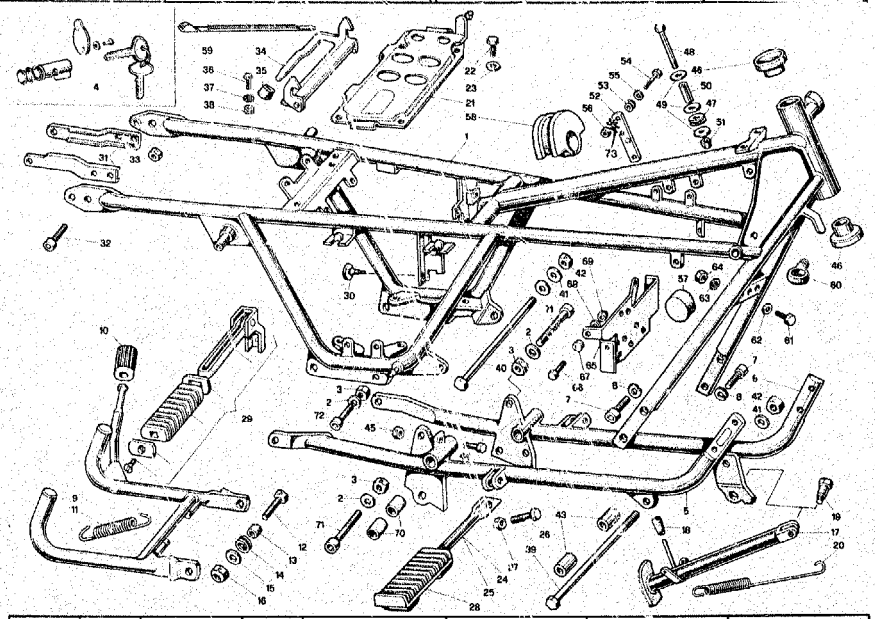

NOTE NOTES NOTES MARKE	POS. N.	N. COD. CODE No. No. CODE CODE Nr	Q.tà Q.ty Q.té M.ge	DENOMINAZIONE	DESCRIPTION	DESIGNATION	BEZEICHNUNG
	37	95 02 11 06	2	Rondella elastica	Spring washer	Rondelle élastique	Federscheibe
	38	92 60 22 06	2	Dado	Nut	Ecrou	Mutter
	39	53 42 95 00	1	Tirante lungo	Long rod	Tirant long	Lange Zugstange
	40	98 11 01 99	1	Tirante corto	Short rod	Tirant court	Kurze Zugstange
	41	95 00 42 10	3	Rondella	Washer	Rondelle	Scheibe
	42	92 60 22 10	2	Dado	Nut	Ecrou	Mutter
	43	19 01 70 00	2	Boccola	Bush	Douille	Buchse
	44	98 05 43 22	1	Vite di registro	Adjusting screw	Vis de réglage	Einstellschraube
	45	92 60 22 06	1	Dado	Nut	Ecrou	Mutter
	46	39 51 50 00	2	Calotta	Cap	Couvercle	Deckel
	47	91 55 10 85	2	Gommino	Rubber	Caoutchouc	Gummistück
	48	98 05 23 45	2	Vite	Screw	Vis	Schraube
	49	95 10 01 39	8	Rondella	Washer	Rondelle	Scheibe
	50	91 18 07 21	2	Distanziale	Spacer	Entretoise	Distanzstück
	51	92 63 01 06	2	Dado	Nut	Ecrou	Mutter
	52	19 71 68 01	4	Piastra attacco bobina	Plate	Plaque	Platte
	53	91 55 10 85	2	Gommino	Rubber	Caoutchouc	Gummistück
	54	98 05 22 25	2	Vite	Screw	Vis	Schraube
	55	95 00 42 05	2	Rondella	Washer	Rondelle	Scheibe
	56	92 60 22 05	2	Dado	Nut	Ecrou	Mutter
	57	39 10 34 00	2	Gommino	Rubber	Caoutchouc	Gummistück
	58	14 10 71 00	1	Tampone centrale	Rubber buffer	Tampon en caoutch	Gummipuffer
	59	14 60 96 50	1	Fascetta	Clamp	Collier	Schelle
	60	19 43 65 00	2	Occhiello	Screw eye	Oeillet	Anschlussöse
	61	98 82 24 20	1	Vite	Screw	Vis	Schraube
	62	95 00 02 08	1	Rondella piana	Washer	Rondelle	Scheibe
	63	95 02 11 08	1	Rondella elast. ondul.	Tooth washer	Rondelle élastique	Federscheibe
	64	92 60 22 08	1	Dado	Nut	Ecrou	Mutter
	65	19 70 41 00	1	Piastra fiss. raddrizz.	Plate	Plaque	Platte
	66	98 05 22 20	2	Vite	Screw	Vis	Schraube
	67	91 55 10 85	2	Gommino	Rubber	Caoutchouc	Gummistück
	68	95 10 00 59	2	Rondella piana	Washer	Rondelle	Scheibe
	69	92 63 01 06	2	Dado in nylon	Nylon nut	Ecrou en nylon	Nylonmutter
	70	18 25 20 50	4	Boccola	Bush	Douille	Buchse
	71	98 05 25 65	2	Vite lunga	Long screw	Vis longue	Lange Schraube
	72	98 05 25 55	2	Vite corta	Short screw	Vis courte	Kurze Schraube
	73	95 02 11 05	2	Rosetta elast. dent.	Tooth washer	Rondelle dentée	Zahnscheibe

INDEX

BODY.....B9-B11
BUMPER GROUP.....B8

CLUTCH.....A5-A6
CLUTCH.....A13-A14
CONNECTING SYSTEM.A5-A6
CONTROLS.....B15-B19
COVERS.....A1-A2
CRANKCASE.....A1-A2
CYLINDER.....A3-A4
CYLINDER HEAD.....A3-A4

EXHAUST.....A8-A11
EXPORT VERSION
MODIFICATIONS.....D1-D2

FEEDING.....A8-A11
FORK.....B1
FRAME.....B5-B7
FRONT SUSPENSION..B12-B13
FRONT WHEEL.....B14

IGNITION.. .....C1-C4
INSTRUMENT PANEL..B18-B19

LIGHTING.....C5-C6
LUBRICATION.....A12

PEDAL.....B15-B17
PEDAL STARTER.....A15
POLICE VERSION....E1-E6

REAR SUSPENSION...B12-B13
REAR TRANSMISSION.B2-B4
REAR WHEEL.....B14

TIMING SYSTEM.....A7
TRANSMISSION.....A18-A20
TRANSMISSION CASE.A16-A17

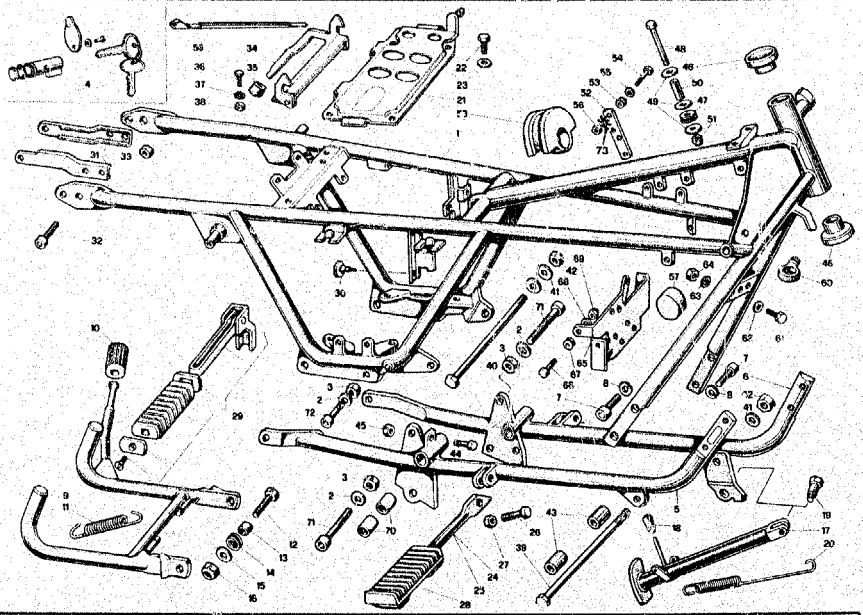

NOTE NOTES NOTES MARKE	POS. N.	N. COD. CODE No. No. CODE CODE Nr	Q.tà Q.ty Q.té M.ge	DENOMINAZIONE	DESCRIPTION	DESIGNATION	BEZEICHNUNG

● I sottoelencati particolari rappresentano le varianti per il mod. V50
Following items refer to V50 mod. only
Les pièces indiquées ci-dessous représentent les variantes pour le mod. V50
Die untergegebene Teile sind nur für Modell V50 gültig

32	98 82 24 18	2	Vite fiss. supp.	Screw	Vis	Schraube
32	98 82 24 20	2	Vite fiss. supp. e man.	Screw	Vis	Schraube

INDEX

BODY.....B9-B11
BUMPER GROUP.....B8

CLUTCH.....A5-A6
CLUTCH.....A13-A14
CONNECTING SYSTEM.A5-A6
CONTROLS.....B15-B19
COVERS.....A1-A2
CRANKCASE.....A1-A2
CYLINDER.....A3-A4
CYLINDER HEAD.....A3-A4

EXHAUST.....A8-A11
EXPORT VERSION
MODIFICATIONS.....D1-D2

FEEDING.....A8-A11
FORK.....B1
FRAME.....B5-B7
FRONT SUSPENSION..B12-B13
FRONT WHEEL.....B14

IGNITION.....C1-C4
INSTRUMENT PANEL..B18-B19

LIGHTING.....C5-C6
LUBRICATION.....A12

PEDAL.....B15-B17
PEDAL STARTER.....A5
POLICE VERSION....E1-E6

REAR SUSPENSION...B12-B13
REAR TRANSMISSION.B2-B4
REAR WHEEL.....B14

TIMING SYSTEM.....A7
TRANSMISSION.....A18-A20
TRANSMISSION CASE.A16-A17

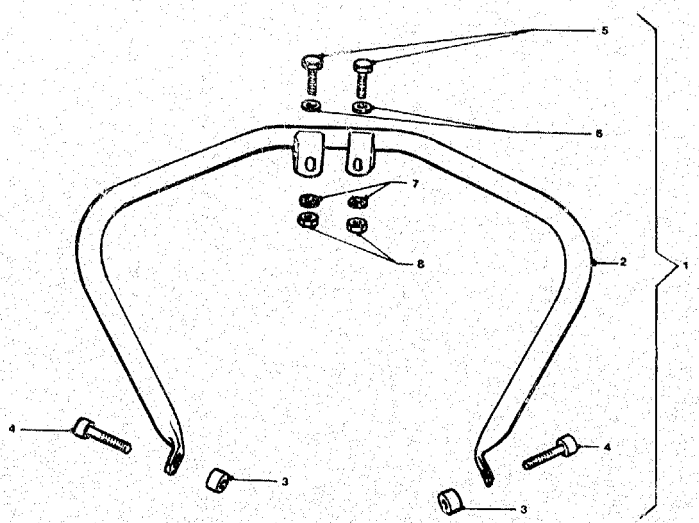

NOTE NOTES NOTES MARKE	POS. N.	N. COD. CODE No. No. CODE CODE Nr.	Q.tà Q.ty Q.té M.ge	DENOMINAZIONE	DESCRIPTION	DESIGNATION	BEZEICHNUNG
	1	19 45 98 00	1	Kit paraurti anteriore comprende:	Front bumper kit includes	Kit de pare-choc AV comprend	Vord. Stossfänger Kit einschliesst
	2	19 45 02 00	1	Paraurti anteriore	Front bumper	Pare-choc AV	Vord. Stossfänger
	3	91 18 11 12	2	Distanziatore per paraur.	Spacer	Entretoise	Distanzstück
	4	98 62 05 40	2	Vite fiss. paraurti	Screw	Vis	Schraube
	5	98 05 44 20	2	Vite super. fiss. paraurti	Screw	Vis	Schraube
	6	95 00 42 08	2	Rosetta piana	Washer	Rondelle	Scheibe
	7	95 02 11 08	2	Rosetta elast. dentell.	Tooth washer	Rondelle dentée	Zahnscheibe
	8	92 60 27 08	2	Dado per vite super.	Nut	Ecrou	Mutter

INDEX

BODY.....B9-B11
BUMPER GROUP.....B8

CLUTCH.....A5-A6
CLUTCH.....A13-A14
CONNECTING SYSTEM.A5-A6
CONTROLS.....B15-B19
COVERS.....A1-A2
CRANKCASE.....A1-A2
CYLINDER.....A3-A4
CYLINDER HEAD.....A3-A4

EXHAUST.....A8-A11
EXPORT VERSION
MODIFICATIONS.....D1-D2

FEEDING.....A8-A11
FORK.....B1
FRAME.....B5-B7
FRONT SUSPENSION..B12-B13
FRONT WHEEL.....B14

IGNITION.....C1-C4
INSTRUMENT PANEL..B18-B19

LIGHTING.....C5-C6
LUBRICATION.....A12

PEDAL.....B15-B17
PEDAL STARTER.....A15
POLICE VERSION....E1-E6

REAR SUSPENSION...B12-B13
REAR TRANSMISSION.B2-B4
REAR WHEEL.....B14

TIMING SYSTEM.....A7
TRANSMISSION.....A18-A20
TRANSMISSION CASE.A16-A17

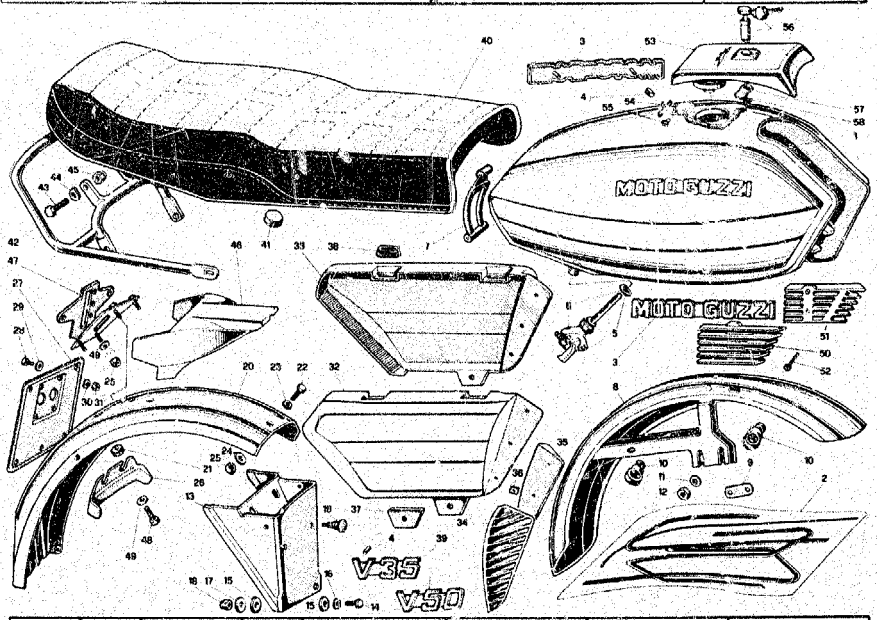

NOTE NOTES NOTES MARKE	POS. N.	N. COD CODE No. No. CODE CODE Nr	Q.tà Q.ty Q.té M.ge	DENOMINAZIONE	DESCRIPTION	DESIGNATION	BEZEICHNUNG
●	1	19 10 02 01	1	Serbatoio rosso	Fuel tank (red)	Réservoir (rouge)	Kraftstoffbehälter (rot)
●	1	19 10 02 02	1	Serbatoio grigio metall.	Fuel tank (metall. grey)	Réservoir (gris métall.)	Kraftstoffbehälter (Met. grau)
	2	19 92 33 00	1	Serie decalcom. (V35)	Decal set (V35)	Jeu de décalc. (V35)	Abziehbildsatz (V35)
	3	14 91 73 00	2	Morsetto per serbatoio	Mark	Marque	Schelle
	4	14 10 51 00	8	Fermaglio	Fastener clip	Etrier	Schelle
	5	66 10 54 00	1	Rubinetto destro	R.H. fuel tap	Robinet D.	Kraftstoffhahn, R.
	6	66 10 54 01	1	Rubinetto sinistro	L.H. fuel tap	Robinet G.	Kraftstoffhahn, L.
	7	19 10 27 50	1	Tirante	Rod	Tirant	Stange
	8	19 43 43 01	1	Parafango anter. in lamiera - Rosso	Front fender (sheet) (red)	Aile AV en tôle (rouge)	Vord. Kotflügel (Blech) (rot)
●	8	19 43 43 02	1	Parafango anter. in lamiera - Grigio metall.	Front fender (sheet) (metall. grey)	Aile AV en tôle (gris métall.)	Vord. Kotflügel (Blech) (metall. grau)
	8	19 43 44 05		Parafango anter. in plastica - Rosso	Front fender (plastic) (red)	Aile AV (plastique) (rouge)	(Vord. Kotflügel (plastisch) (rot)
●	8	19 43 44 06	1	Parafango anter. in plastica - Grigio metall.	Front fender (plastic) (metall. grey)	Aile AV (plastique) (gris métall.)	Vord. Kotflügel (plastisch) (metall. grau)
	9	19 43 66 00	2	Piastra paraf. plastica	Plastic fender plate	Plaquette aile plastique	Plast. Kotflügel Platte
	10	19 43 65 00	2	Occhiello	Screw eye	Oeillet	Anschlußöse
	11	61 27 03 00	4	Rondella	Washer	Rondelle	Scheibe
	12	92 60 22 08	4	Dado	Nut	Ecrou	Mutter
	13	19 43 87 00	1	Paraspruzzi	Wheelshield	Cache roue	Zierdeckel
	14	98 05 43 20	2	Vite	Screw	Vis	Schraube
	15	93 11 00 60	8	Spessore in gomma	Rubber spacer	Entretoise en caoutch.	Gummistück
	16	95 00 02 06	4	Rosetta piana	Washer	Rondelle	Scheibe
	17	95 10 01 41	4	Rosetta piana	Washer	Rondelle	Scheibe
	18	92 63 01 06	4	Dado autobloccante	Self locking nut	Ecrou à autoblocage	Hutmutter
	19	19 70 58 00	2	Tappo sul paraspruzzi	Plug	Bouchon	Stopfen
●	20	19 43 70 01	1	Parafango post. - Rosso	Rear fender (red)	Aile AV (rouge)	Hint. Kotflügel (rot)
	20	19 43 70 02	1	Paraf. post. - Grigio metal.	Rear fender (metall. grey)	Aile AR (gris métall.)	Hint. Kotfl. (met. grau)
	21	91 55 11 [illegible]	1	Gommino passacav.	Rubber grommet	Guide-câble	Gummistulle
	22	98 05 43 [illegible]	2	Vite	Screw	Vis	Schraube
	23	95 00 42 06	2	Rondella	Washer	Rondelle	Scheibe
	24	95 10 01 21	2	Rondella	Washer	Rondelle	Scheibe
	25	92 60 22 06	4	Dado	Nut	Ecrou	Mutter
	26	19 43 85 00	1	Supporto cav.	Cable support	Support de fils	Kabelstütze
	27	39 47 46 00	1	Piastra portatarga	Number pl. hold. plate	Plaque porte-pl. de pol.	Nummerschildplatte

INDEX

BODY.....B9-B11
BUMPER GROUP.....B8

CLUTCH.....A5-A6
CLUTCH.....A13-A14
CONNECTING SYSTEM.A5-A6
CONTROLS.....B15-B19
COVERS.....A1-A2
CRANKCASE.....A1-A2
CYLINDER.....A3-A4
CYLINDER HEAD.....A3-A4

EXHAUST.....A8-A11
EXPORT VERSION
MODIFICATIONS.....D1-D2

FEEDING.....A8-A11
FORK.....B1
FRAME.....B5-B7
FRONT SUSPENSION..B12-B13
FRONT WHEEL.....B14

IGNITION.....C1-C4
INSTRUMENT PANEL..B18-B19

LIGHTING.....C5-C6
LUBRICATION.....A12

PEDAL.....B15-B17
PEDAL STARTER.....A15
POLICE VERSION....E1-E6

REAR SUSPENSION...B12-B13
REAR TRANSMISSION.B2-B4
REAR WHEEL.....B14

TIMING SYSTEM.....A7
TRANSMISSION.....A18-A20
TRANSMISSION CASE.A16-A17

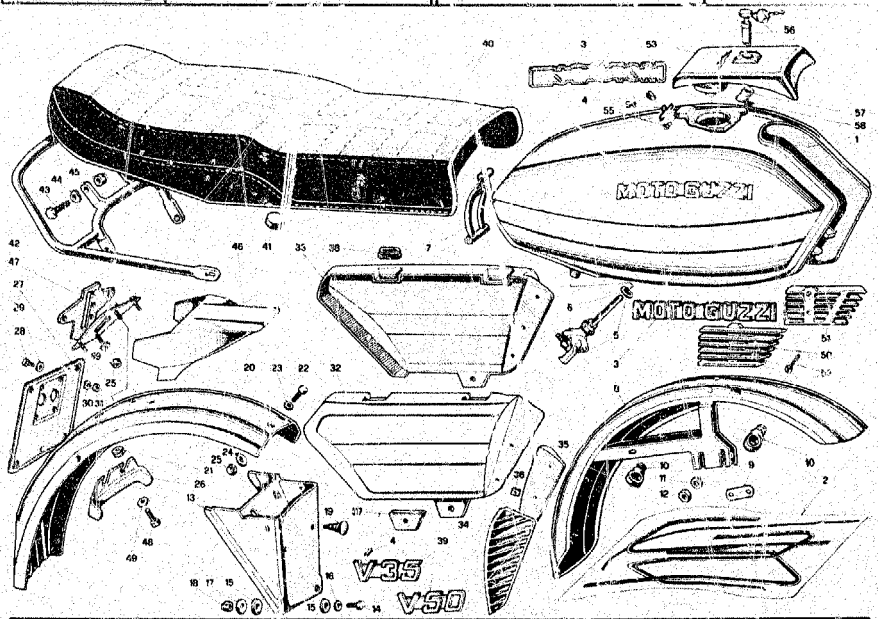

NOTE NOTES NOTES MARKE	POS N.	N. COD CODE No No. CODE CODE Nr	Q.ta Q.ty Q.té Menge	DENOMINAZIONE	DESCRIPTION	DESIGNATION	BEZEICHNUNG
	28	98 20 04 08	4	Vite	Screw	Vis	Schraube
	29	96 00 02 04	4	Rondella o-ana	Washer	Rondelle	Scheibe
	30	95 12 90 80	4	Rondella ondulata	Washer	Rondelle	Scheibe
	31	92 80 22 04	4	Dado	Nut	Ecrou	Mutter
●	32	19 47 62 01	1	Coperchio dx - Rosso	R.H. cover (red)	Couvercle D (rouge)	Deckel, R. (rot)
●	32	19 47 62 02	1	Coperchio dx - Grigio met.	R.H. cover (met. gray)	Couvercle D (gris métall.)	Deckel, R. (met. grau)
●	33	19 47 63 01	1	Coperchio sx - Rosso	L.H. cover (red)	Couvercle G (rouge)	Deckel, L. (rot)
●	33	19 47 63 02	1	Coperchio sx - Grigio met.	L.H. cover (met. grey)	Couvercle G (gris métall.)	Deckel, L. (met. grau)
	34	19 47 81 50	1	Griglia destra	R.H. cover grill	Grille D	Deckelgrill, R.
	35	19 47 82 50	1	Griglia sinistra	L.H. cover grill	Grille G	Deckelgrill L.
	36	39 92 22 00	6	Piastrina a pressione	Plate	Plaque	Platte
	37	19 47 05 50	2	Settore elastico	Flexible spacer ring	Entretoise élast.	Elast. Distanzrohr
	38	19 47 87 90	4	Gommino	Rubber	Caoutchouc	Gummistuck
●	39	19 92 20 00	2	Marchio V35	Mark V35	Marque V35	Marke V35
	40	19 46 05 50	1	Sella completa	Saddle, compl.	Selle complète	Sattel, kpl.
	41	19 46 16 50	4	Tampone	Rubber ring	Disque en caoutch.	Gummiring
	42	19 46 43 50	1	Maniglia	Handgrip	Poignée	Handgriff
	43	98 05 44 20	2	Vite	Screw	Vis	Schraube
	44	61 27 03 09	2	Rondella elastica	Spring washer	Rondelle élastique	Federscheibe
	45	92 63 01 08	2	Dado autofrenante	Nut	Ecrou	Mutter
	46	19 74 10 00	1	Cerniera per fanal.	Support	Support	Halter
	47	19 74 12 00	1	Supporto per fanal.	Support	Support	Halter
	48	98 05 43 14	2	Vite	Screw	Vis	Schraube
	49	95 10 01 21	4	Rondella	Washer	Rondelle	Scheibe
	50	19 92 50 00	1	Griglia destra	R.H. grill	Grille D	Grill, R.
	51	19 92 51 00	1	Griglia sinistra	L.H. grill	Grille G	Grill, L.
	52	98 24 05 11	2	Vite	Screw	Vis	Schraube
	53	19 10 39 51	1	Tappo compl. senza serratura	Plug assy without lock	Bouchon complet sans serrure	Stopfen, kpl. ohne Schloss
	54	19 10 47 51	1	Molla per tappo	Spring	Ressort	Feder
	55	91 85 73 10	2	Rivetto	Rivet	Rivet	Niet
	56	19 10 51 50	1	Serratura per tappo compl. di chiave	Lock with keys	Serrure avec clés	Schloss mit Schlussel
	57	19 10 50 52	1	Chiavistello per serratura	Lock latch	Verrou	Riegel
	58	19 10 48 50	1	Fascetta fiss. chiavistello	Clamp	Collier	Schelle

INDEX

BODY.....B9-B11
BUMPER GROUP.....B8

CLUTCH.....A5-A6
CLUTCH.....A13-A14
CONNECTING SYSTEM.A5-A6
CONTROLS.....B15-B19
COVERS.....A1-A2
CRANKCASE.....A1-A2
CYLINDER.....A3-A4
CYLINDER HEAD.....A3-A4

EXHAUST.....A8-A11
EXPORT VERSION
MODIFICATIONS.....D1-D2

FEEDING.....A8-A11
FORK.....B1
FRAME.....B5-B7
FRONT SUSPENSION..B12-B13
FRONT WHEEL.....B14

IGNITION.....C1-C4
INSTRUMENT PANEL..B18-B19

LIGHTING.....C5-C6
LUBRICATION.....A12

PEDAL.....B15-B17
PEDAL STARTER.....A15
POLICE VERSION....E1-E6

REAR SUSPENSION...B12-B13
REAR TRANSMISSION.B2-B4
REAR WHEEL.....B14

TIMING SYSTEM.....A7
TRANSMISSION.....A18-A20
TRANSMISSION CASE.A16-A17

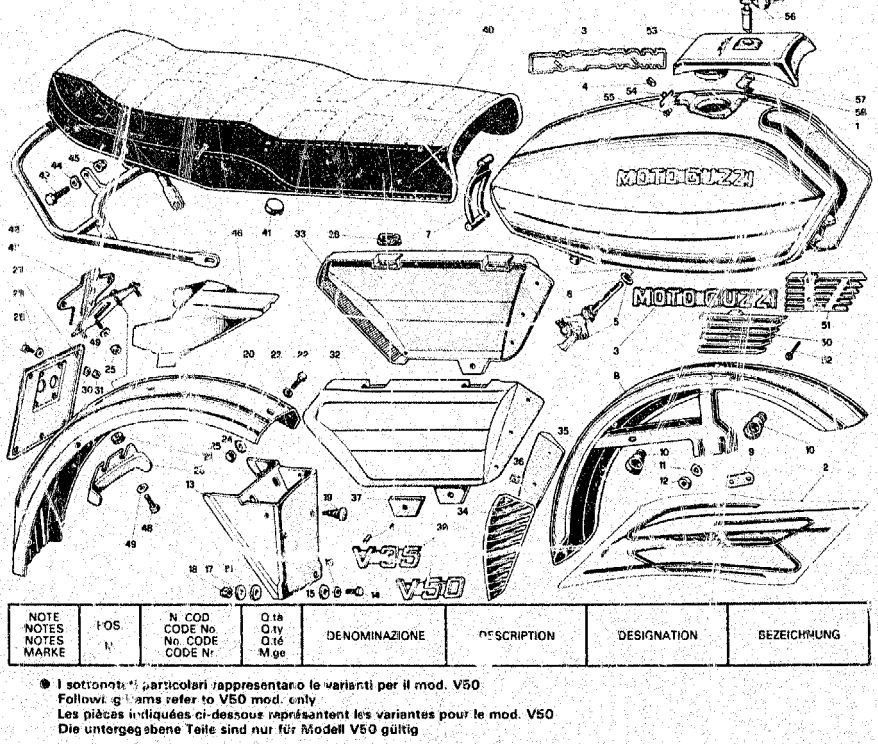

NOTE NOTES NOTES MARKE	POS. N°	N. COD CODE No. No. CODE CODE Nr	Q.tà Q.ty Qté Mge	DENOMINAZIONE	DESCRIPTION	DESIGNATION	BEZEICHNUNG

● I sottonotati particolari rappresentano le varianti per il mod. V50
Following items refer to V50 mod. only
Les pièces indiquées ci-dessous représentent les variantes pour le mod. V50
Die untergegebene Teile sind nur für Modell V50 gültig

1	19 10 02 51	1	Serbatoio - Rosso	Fuel tank (red)	Réservoir (rouge)	Kraftstoffbehälter (rot)
1	19 10 02 52	1	Serbatoio - Bleu metall.	Fuel tank (metall. blue)	Réservoir (bleu métall.)	K.stoffbehältar (met. blau)
8	19 43 43 52	1	Parafango anter. in lamiera - Bleu metall.	Front fender (sheet) - (metall. blue)	Aile AV en tôle - (bleu métall.)	Vord. Kotflügel (Blech) (metall. blau)
8	19 43 44 55	1	Parafango anter. in plastica - Bleu metall.	Front fender (plastic) - (metall. blue)	Aile AV en plastique (bleu metall.)	Vord. Kotflügel (plastisch) (metall. blau)
20	19 43 70 52	1	Paraf. post. - Bleu met.	Rear fender (met. blue)	Aile AR (bleu métall.)	Hint. Kotfl. (met. blau)
32	19 47 62 51	1	Coperchio dx - Rosso	R.H. cover (red)	Couvercle D (rouge)	Deckel, R. (rot)
32	19 47 62 52	1	Coperchio dx - Bleu metallizzato	R.H. cover (metall. blue)	Couvercle D (bleu métall.)	Deckel, R (metall. blau)
33	19 47 63 51	1	Coperchio sx - Rosso	L.H. cover (red)	Couvercle G (rouge)	Deckel, L. (rot)
33	19 47 63 52	1	Coperchio sx - Bleu metallizzato	L.H. cover (metall. blue)	Couvercle G (bleu métall.)	Deckel, L (metall. blau)
39	19 92 20 [illegible]	2	Marchio V50	Mark V50	Marque V50	Marke V50

INDEX

BODY.....B9-B11
BUMPER GROUP.....B8

CLUTCH.....A5-A6
CLUTCH.....A13-A14
CONNECTING SYSTEM.A5-A6
CONTROLS.....B15-B19
COVERS.....A1-A2
CRANKCASE.....A1-A2
CYLINDER.....A3-A4
CYLINDER HEAD.....A3-A4

EXHAUST.....A8-A11
EXPORT VERSION
MODIFICATIONS.....D1-D2

FEEDING.....A8-A11
FORK.....B1
FRAME.....B5-B7
FRONT SUSPENSION..B12-B13
FRONT WHEEL.....B14

IGNITION.....C1-C4
INSTRUMENT PANEL..B18-B19

LIGHTING.....C5-C6
LUBRICATION.....A12

PEDAL.....B15-B17
PEDAL STARTER.....A15
POLICE VERSION....E1-E5

REAR SUSPENSION...B12-B13
REAR TRANSMISSION.B2-B4
REAR WHEEL.....B14

TIMING SYSTEM.....A7
TRANSMISSION.....A18-A20
TRANSMISSION CASE.A16-A17

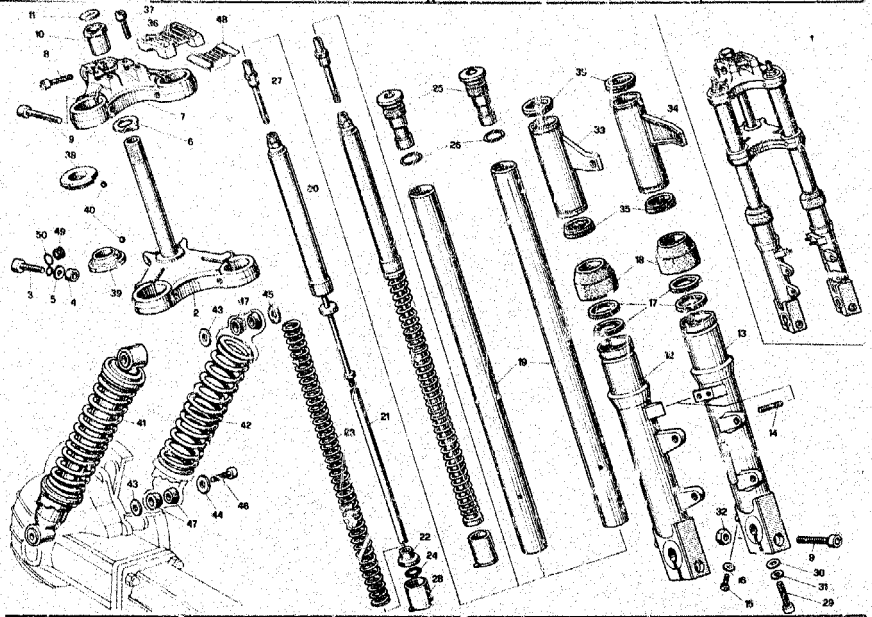

NOTE NOTES NOTES MARKE	POS. N	N. COD. CODE No. No. CODE CODE Nr.	Q.tà Q.ty Q.té M.ge	DENOMINAZIONE	DESCRIPTION	DESIGNATION	BEZEICHNUNG
	1	19 49 03 01	1	Forcella senza foder	Fork without stay tube	Fourche sans tuyau étai	Gabel ohne Stutzrohr
	2	39 49 40 02	1	Base forcella	Fork yoke	Chape de fourche	Gabeluntersatz
	3	98 62 05 55	2	Vite	Screw	Vis	Schraube
	4	91 18 11 10	2	Bussola	Bush	Douille	Buchse
	5	95 00 42 10	1	Rondella	Washer	Rondelle	Scheibe
	6	62 49 32 00	1	Rondella di fermo	Washer	Rondelle	Scheibe
	7	39 49 31 01	1	Testa per forcella	Fork head	Tête de fourche	Gabelkopf
	8	98 62 04 35	1	Vite	Screw	Vis	Schraube
	9	98 62 05 40	4	Vite	Screw	Vis	Schraube
	10	17 51 66 00	1	Bussola bloccastorro	Bush	Douille	Buchse
	11	17 51 77 00	1	Marchio per bussola	Mark	Marque	Marke
	12	19 52 26 01	1	Gambale destro	R.H. sleeve	Chemise D	Laufbuchse, R.
	13	19 52 26 00	1	Gambale sinistro	L.H. sleeve	Chemise G	Laufbuchse, L.
	14	98 50 80 21	4	Prigioniero	Stud bolt	Goujon	Stiftschraube
	15	98 62 03 12	2	Vite scarico olio	Oil drain screw	Vis de vidange huile	Ölablassschraube
	16	95 10 01 16	2	Rondella alluminio	Washer	Rondelle	Scheibe
	17	90 40 32 42	4	Anello di tenuta	Seal ring	Bague d'étanchéité	Dichtring
	18	53 52 45 40	2	Custodia gambale	Dust guard	Cache poussière	Schmutzfänger
	19	39 52 54 01	2	Braccio per forcella	Fork arm	Bras pour fourche	Gabelarm
	20	14 52 64 07	2	Ammortizzatore	Shock absorber	Amortisseur	Stossdämpfer
	21	53 52 78 40	2	Tubo per asta	Pipe	Tuyau	Rohr
	22	53 52 79 40	2	Estremità per asta	Tube end	Embout	Rohrende
	23	19 52 66 00	2	Molla	Spring	Ressort	Feder
	24	90 27 10 12	2	Anello Seeger	Snap ring	Jonc d'arrêt	Saegering
	25	39 50 45 01	2	Tappo superiore	Upper plug	Bouchon supér.	Oberstopfen
	26	90 70 60 02	2	Anello di tenuta	Seal ring	Bague d'étanchéité	Dichtring
	27	19 50 48 00	2	Vite	Screw	Vis	Schraube
	28	53 52 76 40	2	Scodellino inferiore	Lower cap	Coupelle infér.	Unt. Manschette
	29	98 62 54 30	2	Vite	Screw	Vis	Schraube
	30	12 15 42 00	2	Rondella	Washer	Rondelle	Scheibe
	31	95 00 42 08	2	Rosetta	Washer	Rondelle	Scheibe
	32	92 60 22 10	2	Dado	Nut	Ecrou	Mutter
	33	19 49 61 01	1	Fodero dx (rosso)	R.H. stay tube (red)	Tuyau étai D (rouge)	Stutzrohr, R. (rot)
•	33	19 49 61 02	1	Fodero dx (grigio)	R.H. stay tube (grey)	Tuyau étai D (gris)	Stutzrohr, R. (grau)
	34	19 49 62 01	1	Fodero sx (rosso)	L.H. stay tube (red)	Tuyau étai G (rouge)	Stutzrohr, L. (rot)
•	34	19 49 62 02	1	Fodero sx (grigio)	L.H. stay tube (grey)	Tuyau étai G (gris)	Stutzrohr, L. (grau)

INDEX

BODY.....B9-B11
BUMPER GROUP.....B8

CLUTCH.....A5-A6
CLUTCH.....A13-A14
CONNECTING SYSTEM..A5-A6
CONTROLS.....B15-B19
COVERS.....A1-A2
CRANKCASE.....A1-A2
CYLINDER.....A3-A4
CYLINDER HEAD.....A3-A4

EXHAUST.....A8-A11
EXPORT VERSION
MODIFICATIONS.....D1-D2

FEEDING.....A8-A11
FORK.....B1
FRAME.....B5-B7
FRONT SUSPENSION..B12-B13
FRONT WHEEL.....B14

IGNITION.....C1-C4
INSTRUMENT PANEL..B18-B19

LIGHTING.....C5-C6
LUBRICATION.....A12

PEDAL.....B15-B17
PEDAL STARTER.....A15
POLICE VERSION.....E1-E6

REAR SUSPENSION...B12-B13
REAR TRANSMISSION.B2-B4
REAR WHEEL.....B14

TIMING SYSTEM.....A7
TRANSMISSION.....A18-A20
TRANSMISSION CASE.A16-A17

SOSPENSIONI ANTER. E POSTER.
FRONT AND REAR SUSPENSIONS
SUSPENSIONS AV ET AR
VORD. - HINTERRADAUFHÄNG.

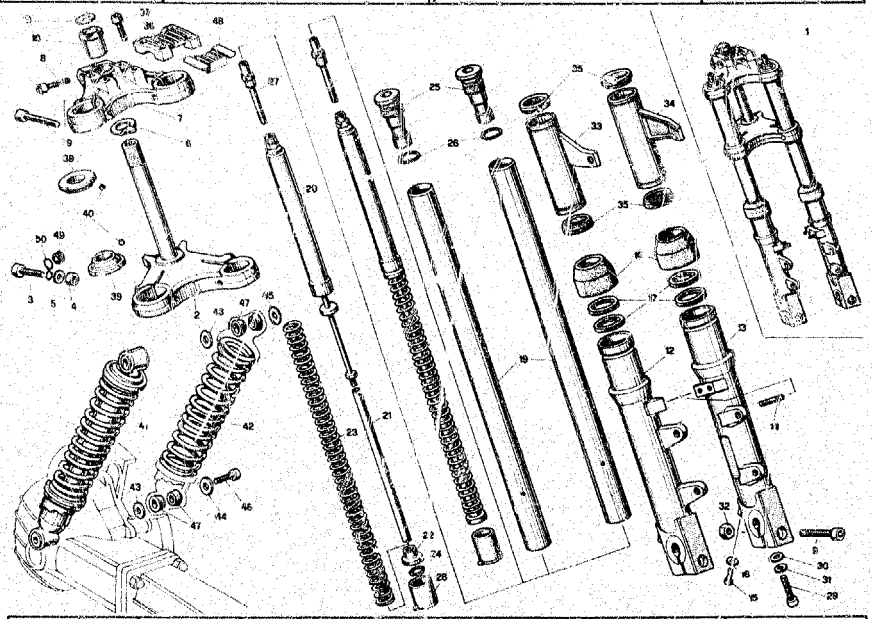

NOTE NOTES NOTES MARKE	POS. N.	N. COD. CODE No. No. CODE CODE Nr.	Q.tà Qty Qté Mge	DENOMINAZIONE	DESCRIPTION	DESIGNATION	BEZEICHNUNG
	35	39 49 27 01	4	Anello	Ring	Bague	Ring
	36	19 60 02 00	1	Morsetto	Clamp	Collier	Klemme
	37	98 83 04 35	4	Vite	Screw	Vis	Schraube
	38	61 51 49 40	1	Calotta superiore	Upper cap	Chapeau supér.	Oberkappe
	39	61 51 52 40	1	Calotta inferiore	Lower cap	Chapeau infér.	Unterkappe
	40	92 29 57 04	44	Sfera	Ball	Bille	Kugel
	41	19 55 02 00	2	Sospensione poster	Rear suspension	Suspension AR	Hint. Aufhangung
	42	19 55 23 00	2	Molla	Spring	Ressort	Feder
	43	95 00 42 15	4	Rondella interna	Inside washer	Rondelle intérieure	Innenscheibe
	44	95 10 02 55	2	Rondella esterna inf.	Outside washer	Rondelle extérieure	Aussenscheibe
	45	95 00 02 08	2	Rondella esterna sup.	Outside washer	Rondelle extérieure	Aussenscheibe
	46	98 82 24 16	4	Vite	Screw	Vis	Schraube
	47	10 55 16 00	8	Boccola	Bush	Douille	Büchse
	48	19 50 05 00	1	Tappo coprimorsetto	Plug	Bouchon	Stopfen
	49	94 55 11 20	1	Gommino per occhiello	Rubber	Caoutchouc	Gummistück
	50	19 76 32 00	1	Occhiello trasm. contakm.	Screw eye	Oeillet	Anschlussose

● **I sottonotati particolari rappresentano le varianti per il mod. V50**
Following items refer to V50 mod. only
Les pièces indiquées ci-dessous représentent les variantes pour le mod. V50
Die untergegebene Teile sind nur für Modell V50 gültig

	33	19 49 61 52	1	Fodero dx (Blu metall.)	R.H. stay tube (metall. blue)	Tuyau étai D (bleu métall.)	Stutzrohr, R (metall. blau)
	34	19 49 62 52	1	Fodero sx (Blu metall.)	L.H. stay tube (metall. blue)	Tuyau étai G (bleu métall.)	Stutzrohr, L (metall. blau)

INDEX

BODY.....B9-B11
BUMPER GROUP.....B8

CLUTCH.....A5-A6
CLUTCH.....A13-A14
CONNECTING SYSTEM.A5-A6
CONTROLS.....B15-B19
COVERS.....A1-A2
CRANKCASE.....A1-A2
CYLINDER.....A3-A4
CYLINDER HEAD.....A3-A4

EXHAUST.....A8-A11
EXPORT VERSION
MODIFICATIONS.....D1-D2

FEEDING.....A8-A11
FORK.....B1
FRAME.....B5-B7
FRONT SUSPENSION..B12-B13
FRONT WHEEL.....B14

IGNITION.....C1-C5
INSTRUMENT PANEL..B18-B19

LIGHTING.....C5-C6
LUBRICATION.....A12

PEDAL.....B15-B17
PEDAL STARTER.....A15
POLICE VERSION....E1-E6

REAR SUSPENSION...B12-B13
REAR TRANSMISSION.B2-B4
REAR WHEEL.....B14

TIMING SYSTEM.....A7
TRANSMISSION.....A18-A20
TRANSMISSION CASE.A16-A17

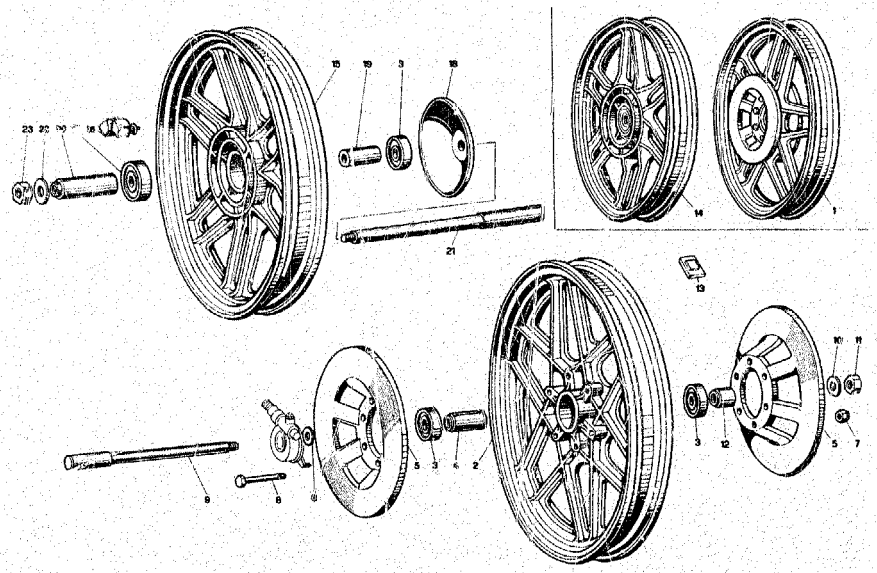

NOTE NOTES NOTES MARKE	POS. N.	N. CODICE No. CODE No. CODE CODE Nr	Q.tà Q.ty Q.tè M.ge	DENOMINAZIONE	DESCRIPTION	DESIGNATION	BEZEICHNUNG
	1	19 61 02 00	1	Ruota anter. compl.	Front wheel, compl.	Roue AV. compl.	Vorderrad, kpl.
	2	19 61 03 00	1	Ruota anteriore (1.85" x 18")	Front wheel (1.85 x 18")	Roue AV. (1.85 x 18")	Vorderrad (1.85 x 18")
	3	92 20 42 17	3	Cuscinetto per mozzo	Bearing	Roulement	Lager
	4	39 61 52 05	1	Distanziale	Spacer	Entretoise	Distanzstück
	5	19 61 33 00	2	Disco freno ant.	Front disc	Disque AV	Vord. Bremsscheibe
	6	98 05 24 60	6	Vite	Screw	Vis	Schraube
	7	92 63 05 08	6	Dado autobloccante	Nut	Ecrou	Mutter
	8	91 18 18 03	1	Distanziale	Spacer	Entretoise	Distanzstück
	9	19 61 41 00	1	Perno ruota anter.	Front wheel pin	Goujon roue AV	Vorderradstift
	10	95 00 42 17	1	Rosetta	Washer	Rondelle	Scheibe
	11	92 80 25 16	1	Dado	Nut	Ecrou	Mutter
	12	39 61 63 01	1	Distanziale	Spacer	Entretoise	Distanzstück
	13	14 61 61 50	1 ÷ 2	Tavoletta contrappesi	Balance weight	Masse additive	Gewichtsausgleich
	14	19 63 02 00	1	Ruota poster. compl.	Rear wheel, compl.	Roue AR. compl.	Hinterrad, kpl.
	15	19 63 06 00	1	Ruota poster. nuda (2.15 x 18")	Rear wheel (2.15 x 18")	Roue AR (2.15 x 18")	Hinterrad (2.15 x 18")
	16	19 63 25 00	6	Elemento parastrappi	Rubber coupling	Joint en caoutchouc	Gummikupplung
	17	92 20 42 18	1	Cuscinetto a sfere	Ball bearing	Roulement à billes	Kugellager
	18	19 63 64 00	1	Protezione	Protection	Protection	Schutz
	19	19 63 40 00	1	Distanziale	Spacer	Entretoise	Distanzstück
	20	19 63 41 00	1	Distanziale	Spacer	Entretoise	Distanzstück
	21	19 63 33 00	1	Perno per ruota	Wheel pin	Goujon roue	Radstift
	22	14 63 44 00	1	Rondella	Washer	Rondelle	Scheibe
	23	92 60 23 16	1	Dado	Nut	Ecrou	Mutter

INDEX

BODY.....B9-B11
BUMPER GROUP.....B8

CLUTCH.....A5-A6
CLUTCH.....A13-A14
CONNECTING SYSTEM.A5-A6
CONTROLS.....B15-B19
COVERS.....A1-A2
CRANKCASE.....A1-A2
CYLINDER.....A3-A4
CYLINDER HEAD.....A3-A4

EXHAUST.....A8-A11
EXPORT VERSION
MODIFICATIONS.....D1-D2

FEEDING.....A8-A11
FORK.....B1
FRAME.....B5-B7
FRONT SUSPENSION..B12-B13
FRONT WHEEL.....B14

IGNITION.....C1-C4
INSTRUMENT PANEL..B18-B19

LIGHTING.....C5-C6
LUBRICATION.....A12

PEDAL.....B15-B17
PEDAL STARTER.....A15
POLICE VERSION....E1-E6

REAR SUSPENSION...B12-B13
REAR TRANSMISSION.B2-B4
REAR WHEEL.....B14

TIMING SYSTEM.....A7
TRANSMISSION.....A18-A20
TRANSMISSION CASE.A16-A17

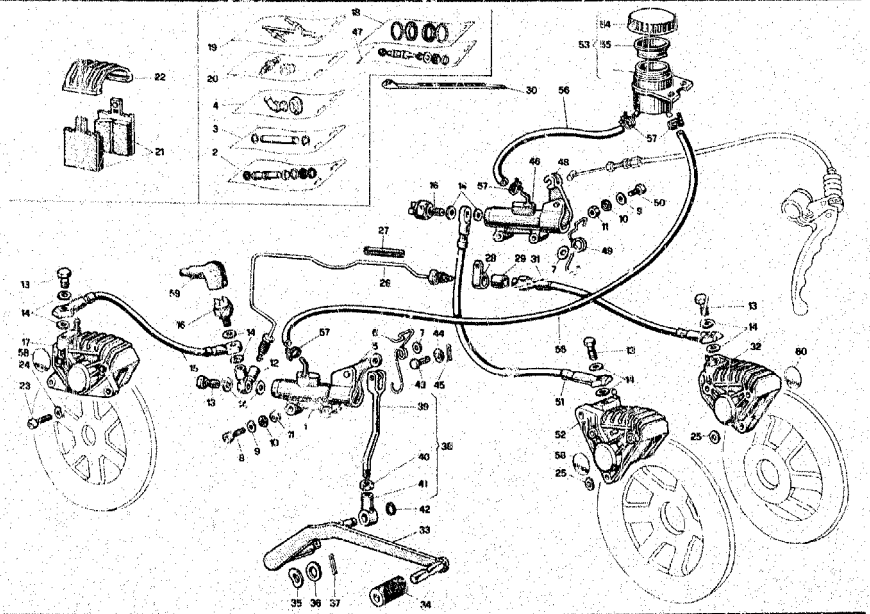

NOTE NOTES NOTES MARKE	POS. N.	N. COD. CODE No. No. CODE CODE Nr.	Q.tà Q.ty Q.té M.ge	DENOMINAZIONE	DESCRIPTION	DESIGNATION	BEZEICHNUNG
	1	19 66 70 00	1	Pompa com. freni ant. sx e post. senza leva	L.H. front & rear brake pump without lever	Pompe frein AV G et AR sans levier	L. Vord. u. Hint. Bremspumpe ohne Hebel
	2	17 65 93 50	1	Gruppo revis. guarnizioni pompe freno poster.	Gaskets kit for rear brake pump	Kit de joints pour pompe frein AR	Dichtung - Rep. - Satz für Hint. Bremsepumpe
	3	19 65 96 00	2	Gruppo rev. perni leva	Lever pins kit	Kit de goujons levier	Hebelstift - Rep. - Satz
	4	19 65 95 00	2	Gruppo rev. raccordo pompa freno	Brake pump union kit	Kit de raccord pompe frein	Bremspumpe Verbindung - Rep. - Satz
	5	19 66 75 00	1	Leva comm. pompa	Pump lever	Levier comm. pompe	Pumpehebel
	6	19 66 76 00	1	Molla	Spring	Ressort	Feder
	7	95 00 42 06	2	Rondella	Washer	Rondelle	Scheibe
	8	98 05 23 26	2	Vite fiss. pompa	Screw	Vis	Schraube
	9	61 01 38 00	2	Rondella piana	Washer	Rondelle	Scheibe
	10	95 02 11 06	4	Rondella dentellata	Tooth washer	Rondelle dentée	Zahnscheibe
	11	92 60 22 05	4	Dado	Nut	Ecrou	Mutter
	12	19 66 80 00	1	Ripartitore	Brake joint	Raccord frein	Bremseanschluss
	13	95 99 00 33	4	Vite cava	Screw	Vis	Schraube
	14	25 65 61 00	12	Guarnizione	Gasket	Joint	Dichtung
	15	17 65 71 01	1	Tubazione ripart.	Pipe	Tuyau	Rohr
	16	14 65 70 50	2	Interruttore idraulico	Stop light switch	Contacteur de stop	Stoplichtschalter
	17	19 65 30 00	1	Pinza per freno post.	Rear brake caliper	Etrier frein AR	Hint. Bremssattel
	18	39 65 90 00	3	Gruppo rev. guarnizioni pinza freno	Brake caliper gaskets kit	Kit de joints étrier frein	Bremsesattelдichtung - Rep. - Satz
	19	39 65 91 00	3	Gruppo rev. perni past.	Pins kit	Kit de pivots	Bremsbelag - Rep. - Satz
	20	14 65 92 00	3	Gruppo rev. spurgo	Screws kit	Kit de vis	Schrauben - Rep. - Satz
	21	19 65 46 00	4	Past. per pinze ant. dx e post. (Ferit 334 FG)	Pads for R.H. front & rear cal. (Ferit 334 FG)	Patins pour étrier AV D et AR (Ferit 334 FG)	Bremsbelag für R. Vord. u. Hint. Fests. (Ferit 334 FG)
	21	19 65 46 01	2	Pastiglie per pinze ant. sx (Ferit I/D 346 GG)	Pads for L.H. front cal. (Ferit I/D 346 GG)	Patins pour étrier AV G (Ferit I/D 346 GG)	Bremsbelag für L. Vord. Fests. (Ferit I/D 346 GG)
	22	39 65 47 00	3	Coperchio ferritoia	Cover	Couvercle	Deckel
	23	98 62 24 22	6	Vite	Screw	Vis	Schraube
	24	61 27 03 00	6	Rondella elastica	Spring washer	Rondelle élastique	Federscheibe
	25	95 10 02 50	0 ÷ 4	Rosetta di spallamento (mm 0,5)	Spacer washer (mm 0,5)	Rondelle d'épaulement (mm 0,5)	Einstellscheibe (mm 0,5)

INDEX

BODY.....B9-B11
BUMPER GROUP.....B8

CLUTCH.....A5-A6
CLUTCH.....A13-A14
CONNECTING SYSTEM.A5-A6
CONTROLS.....B15-B19
COVERS.....A1-A2
CRANKCASE.....A1-A2
CYLINDER.....A3-A4
CYLINDER HEAD.....A3-A4

EXHAUST.....A8-A11
EXPORT VERSION
MODIFICATIONS.....D1-D2

FEEDING.....A8-A11
FORK.....B1
FRAME.....B5-B7
FRONT SUSPENSION..B12-B13
FRONT WHEEL.....B14

IGNITION.....C1-C4
INSTRUMENT PANEL..B18-B19

LIGHTING.....C5-C6
LUBRICATION.....A12

PEDAL.....B15-B17
PEDAL STARTER.....A15
POLICE VERSION.....E1-E6

REAR SUSPENSION...B12-B13
REAR TRANSMISSION.B2-B4
REAR WHEEL.....B14

TIMING SYSTEM.....A7
TRANSMISSION.....A18-A20
TRANSMISSION CASE.A16-A17

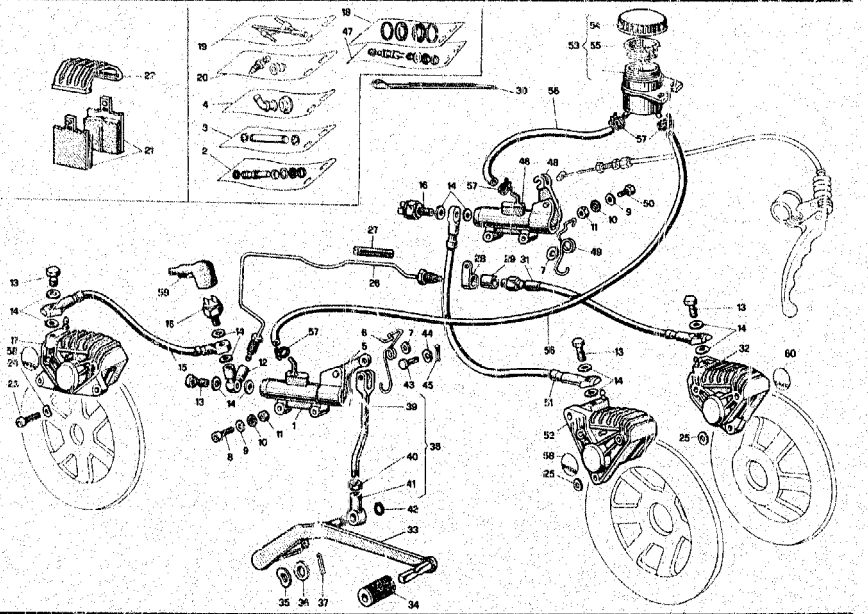

NOTE NOTES NOTES MARKE	POS. N.	N. COD. CODE No. No. CODE CODE Nr.	Q.tà Q.ty Q.té M.ge	DENOMINAZIONE	DESCRIPTION	DESIGNATION	BEZEICHNUNG
	25	95 10 02 51	0 ÷ 4	Rosetta di spallamento (mm 0,8)	Spacer washer (mm 0,8)	Rondelle d'épaulement (mm 0,8)	Einstellscheibe (mm 0,8)
	26	19 66 87 00	1	Tubazione rigida	Not flexible pipe	Tuyau rigide	Starrohr
	27	17 66 86 50	2	Fascia elastica	Clamp	Collier	Klemme
	28	62 43 65 00	1	Occhiello tubaz. fless.	Pipe eyelet	Oeillet tuyau	Rohranschlussöse
	29	90 71 61 42	1	Gomm.no antivibr.	Rubber	Caoutchouc	Gummistück
	30	14 60 96 50	2	Fascetta fiss. tubaz.	Clamp	Collier	Klemme
	31	14 65 88 51	1	Tubazione flessibile	Flexible pipe	Tuyau flexible	Bremsschlauch
	32	19 65 23 00	1	Pinza anter. sinistra	L.H. front caliper	Etrier AV G	Vord. Festsattel, L.
	33	19 67 70 00	1	Leva com. freni	Brake lever	Levier comm. frein	Bremshebel
	34	14 25 10 01	1	Pedalino in gomma	Rubber pedal	Pédalier en caoutchouc	Gummigliitschutze
	35	95 12 92 60	1	Rondella elastica	Spring washer	Rondelle élastique	Federscheibe
	36	95 00 42 15	1	Rondella piana	Washer	Rondelle	Scheibe
	37	95 50 02 27	1	Copiglia	Cotter pin	Goupille	Splint
	38		1	Tirante completo	Connecting rod, assy	Tige intermed. compl.	Zwischenstange, kpl.
	39	19 67 51 00	1	Tirante	Connecting rod	Tige intermédiaire	Zwischenstange
	40	92 70 00 73	1	Dado	Nut	Ecrou	Mutter
	41	18 25 75 51	1	Blocchetto	Block	Bloc	Block
	42	90 27 10 09	1	Anello Seeger	Ring	Jonc d'arrêt	Seegerring
	43	95 78 02 65	1	Spina	Pin	Goupille	Stift
	44	95 12 91 10	1	Rondella antivibr.	Washer	Rondelle	Scheibe
	45	95 50 02 22	1	Copiglia	Cotter pin	Goupille	Splint
	46	19 66 02 00	1	Pompa freno senza leva	Brake pump without lever	Pompe frein sans levier	Bremsepumpe ohne Hebel
	47	17 65 93 52	1	Gruppo rev. guarnizioni pompa freno anter.	Gasket kit for front brake pump	Kit de joints pour pompe frein AV	Dichtung - Rep. - Satz für Vord. Bremsepumpe
	48	19 66 33 00	1	Leva com. pompa	Pump lever	Levier comm. pompe	Pumpehebel
	49	19 66 26 00	1	Molla	Spring	Ressort	Feder
	50	98 05 23 25	2	Vite	Screw	Vis	Schraube
	51	19 65 71 00	1	Tubazione flessibile	Flexible pipe	Tuyau flexible	Bremsschlauch
	52	19 65 22 00	1	Pinza idraulica dx	R.H. caliper	Etrier D	Festsattel, R.
	53	19 66 50 00	1	Serbatoio per fl. freni	Tank	Réservoir	Behälter
	54	14 66 11 00	1	Tappo per serbatoio	Tank cap	Bouchon du réserv.	Behälterstopfen
	55	14 66 13 00	1	Membrana a soffietto	Membran	Membrane	Membran
*	56	823 94 70 90		Tubazione	Pipe	Tuyau	Rohr
	57	19 15 78 00	4	Fascetta elastica	Clamp	Collier	Klemme

INDEX

BODY.....B9-B11
BUMPER GROUP.....B8

CLUTCH.....A5-A6
CLUTCH.....A13-A14
CONNECTING SYSTEM.A5-A6
CONTROLS.....B15-B19
COVERS.....A1-A2
CRANKCASE.....A1-A2
CYLINDER.....A3-A4
CYLINDER HEAD.....A3-A4

EXHAUST.....A8-A11
EXPORT VERSION
MODIFICATIONS.....D1-D2

FEEDING.....A8-A11
FORK.....B1
FRAME.....B5-B7
FRONT SUSPENSION..B12-B13
FRONT WHEEL.....B14

IGNITION.....C1-C4
INSTRUMENT PANEL..B18-B19

LIGHTING.....C5-C6
LUBRICATION.....A18

PEDAL.....B15-B17
PEDAL STARTER.....A15
POLICE VERSION....E1-E5

REAR SUSPENSION...B12-B13
REAR TRANSMISSION.B2-B5
REAR WHEEL.....B14

TIMING SYSTEM.....A7
TRANSMISSION.....A18-A20
TRANSMISSION CASE.A16-A17

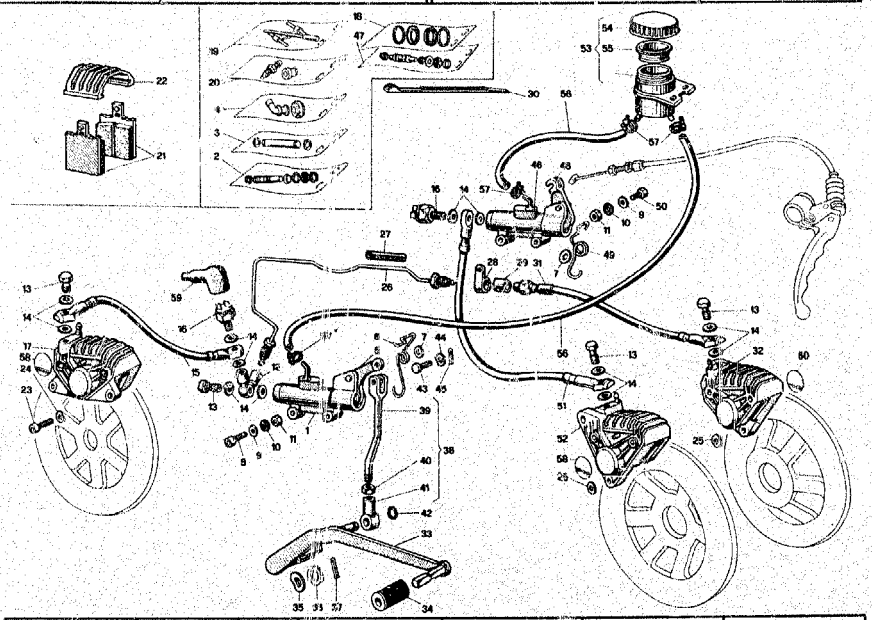

NOTE NOTES NOTES MARKE	POS. N.	N. COD. CODE No. No. CODE CODE Nr	Q.tà Q.ty Q.té M.ge	DENOMINAZIONE	DESCRIPTION	DESIGNATION	BEZEICHNUNG
	58	19 69 49 00	2	Decalcom. per pinza dx a post. (Ferit I/D 334)	Decal for R.H. front & rear cal. (Ferit I/D 334)	Décalcom. pour étrier D AV et AR (Ferit I/D 334)	Abziehbild für R. Vord. u. Hint. Fests. (Ferit I/D 334)
	59	12 73 51 00	2	Cappuccio	Cap	Capuchon	Kappe
	60	19 69 27 00	1	Decalcom. per pinza s. anter. (Ferit I/D 346)	Decal for L.H. front caliper (Ferit I/D 346)	Décalcom. pour étrier G AV (Ferit I/D 346)	Abziehbild für Vord. L. Festsattel (Ferit I/D 346)

- **Specificare la quantità in metri (1 m - 2 m - ecc.) - Indicate quantity required in meters (1 m - 2 m - etc.) Indiquer la quantité en mètres (1 m - 2 m - etc.) - Lieferbar in Meter (1 m - 2 m - etc.) bestellen**

INDEX

BODY.....B9-B11
BUMPER GROUP.....B8

CLUTCH.....A5-A6
CLUTCH.....A13-A14
CONNECTING SYSTEM.A5-A6
CONTROLS.....B15-B19
COVERS.....A1-A2
CRANKCASE.....A1-A2
CYLINDER.....A3-A4
CYLINDER HEAD.....A3-A4

EXHAUST.....A8-A11
EXPORT VERSION
MODIFICATIONS.....D1-D2

FEEDING.....A8-A11
FORK.....B1
FRAME.....B5-B7
FRONT SUSPENSION..B12-B13
FRONT WHEEL.....B14

IGNITION.....C1-C4
INSTRUMENT PANEL..B18-B19

LIGHTING.....C5-C6
LUBRICATION.....A12

PEDAL.....B15-B17
PEDAL STARTER.....A15
POLICE VERSION....E1-E6

REAR SUSPENSION...B12-B13
REAR TRANSMISSION.B2-B4
REAR WHEEL.....B14

TIMING SYSTEM.....A7
TRANSMISSION.....A18-A20
TRANSMISSION CASE.A16-A17

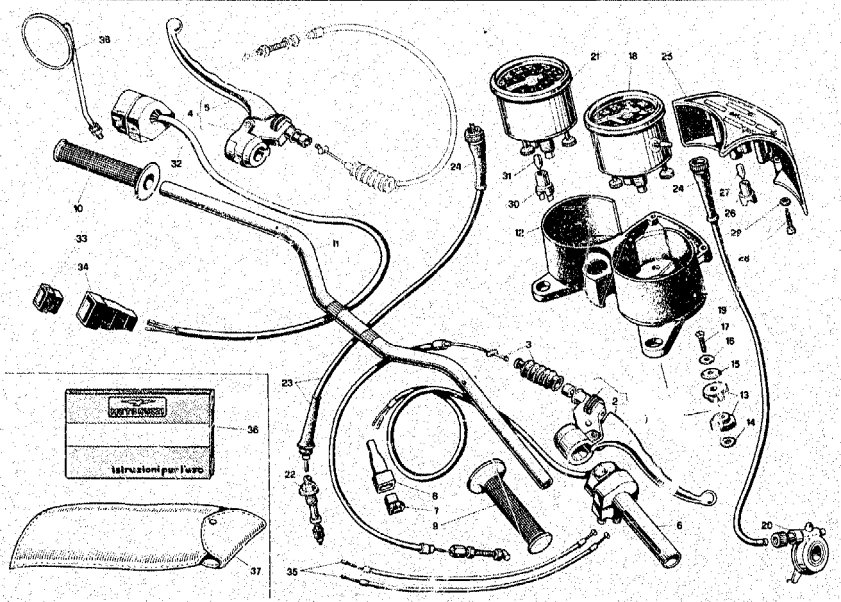

NOTE NOTES NOTES MARKE	POS. N.	N. COD. CODE No. No. CODE CODE Nr.	Q.tà Q.ty Q.té M.ge	DENOMINAZIONE	DESCRIPTION	DESIGNATION	BEZEICHNUNG
	1	19 60 54 00	1	Leva com. freno compl.	Brake lever, compl.	Levier comm. frein com.	Bremsehebel, kpl.
	2	19 60 56 00	1	Leva nuda	Lever	Levier	Hebel
	3	19 62 54 51	1	Trasmiss. com. frizi	Bike cable	Câble d'embrayage	Kupplungskabel
	4	19 60 55 01	1	Leva com. friz. compl.	Clutch lever compl.	Levier d'embr. compl.	Kupplungshebel, kpl.
	5	14 60 57 50	1	Leva nuda	Lever	Levier	Hebel
	6	65 60 34 20	1	Impugnatura com. gas	Throttle control	Commande de gaz	Gasregelung
	7	61 74 05 50	1	Connettore a 3 vie	Connector	Connecteur	Verbinder
	8	17 75 58 00	1	Cappuccio	Cap	Capuchon	Kappe
	9	65 60 35 00	1	Manopola destra	R.H. hand grip	Poignée D	Handgriff, R.
	10	65 60 30 00	1	Manopola sinistra	L.H. hand grip	Poignée G	Handgriff, L.
	11	65 60 03 00	1	Manubrio	Handle bar	Guidon	Lenker
	12	19 50 15 00	1	Cruscotto portastrum.	Instrument panel	Tableau de bord	Instrumentbrett
	13	14 50 22 50	4	Elemento elastico	Rubber ring	Anneau en caoutch.	Gummiring
	14	95 00 42 15	2	Rondella inferiore	Lower washer	Rondelle inférieure	Unterscheibe
	15	95 09 01 42	2	Rondella superiore	Upper washer	Rondelle supérieure	Oberescheibe
	16	18 57 78 50	2	Rondella esterna	Outside washer	Rondelle extérieure	Aussenscheibe
	17	98 27 06 21	2	Vite	Screw	Vis	Schraube
	18	19 76 15 00	1	Tachimetro contakm	Speedometer - Km. ind.	Tachym. Compt. Km.	Tachometer - Km. Zähler
	19	19 76 04 00	1	Trasmissione contakm.	Km. indicator cable	Câble compt. km.	Km. Zahlerkabel
	20	39 76 25 01	1	Rinvio contagiri	Transmission compl.	Transmission compl.	Vorgelege, kpl.
	21	19 76 72 00	1	Contagiri	Rev. counter	Compte-tours	Drehzahlmesser
	22	14 76 92 00	1	Bussola e pignone (Z = 14)	Bush and pinion (Z = 14)	Douille et pignon (Z = 14)	Buchse und Tachoritzel (Z = 14)
	23	19 76 81 00	1	Trasmiss. contagiri	Rev. counter cable	Câble compte-tours	Drehzahlmesserkabel
	24	17 76 22 00	2	Guaina	Hose	Gaine	Schutzschlauch
	25	14 76 69 70	1	Supporto con gemme	Support with name	Support avec emblème	Halter mit Schild
	26	14 76 86 51	8	Portalampada	Lamp socket	Douille d'ampoule	Glühlampenfassung
	27	93 45 01 40	8	Lampadine spie (12 V - 1,2 W)	Pilot light (12 V - 1,2 W)	Témoin (12 V - 1,2 W)	Anzeigelicht (12 V - 1,2 W)
	28	98 83 02 25	2	Vite	Screw	Vis	Schraube
	29	95 02 11 05	2	Rondella	Washer	Rondelle	Scheibe
	30	17 76 06 50	2	Portalampada	Lamp socket	Douille d'ampoule	Glühlampenfassung
	31	17 76 21 50	2	Lampada (12V - 3W)	Bulb (12V - 3W)	Ampoule (12V - 3W)	Lampe (12V - 3W)
	32	65 73 80 20	1	Dispos. com. avvis. ac	Horn control	Dispos. comm. avv. ac.	Hupevorrichtung
	33	61 74 05 51	1	Connettore 12 vie	Connector	Connecteur	Verbinder
	34	17 75 57 00	1	Cappuccio	Cap	Capuchon	Kappe
	35	19 11 75 50	2	Trasmiss. com. gas	Gas cable	Câble du gaz	Gaskabel

INDEX

BODY.....B9-B11
BUMPER GROUP.....B8

CLUTCH.....A5-A6
CLUTCH.....A13-A14
CONNECTING SYSTEM.A5-A6
CONTROLS.....B15-B19
COVERS.....A1-A2
CRANKCASE.....A1-A2
CYLINDER.....A3-A4
CYLINDER HEAD.....A3-A4

EXHAUST.....A8-A11
EXPORT VERSION
MODIFICATIONS.....D1-D2

FEEDING.....A8-A11
FORK.....B1
FRAME.....B5-B7
FRONT SUSPENSION..B12-B13
FRONT WHEEL.....B14

IGNITION.....C1-C4
INSTRUMENT PANEL..B18-B19

LIGHTING.....C5-C6
LUBRICATION.....A12

PEDAL.....B15-B17
PEDAL STARTER.....A15
POLICE VERSION....E1-E6

REAR SUSPENSION...B12-B13
REAR TRANSMISSION.B2-B4
REAR WHEEL.....B14

TIMING SYSTEM.....A7
TRANSMISSION.....A18-A20
TRANSMISSION CASE.A16-A17

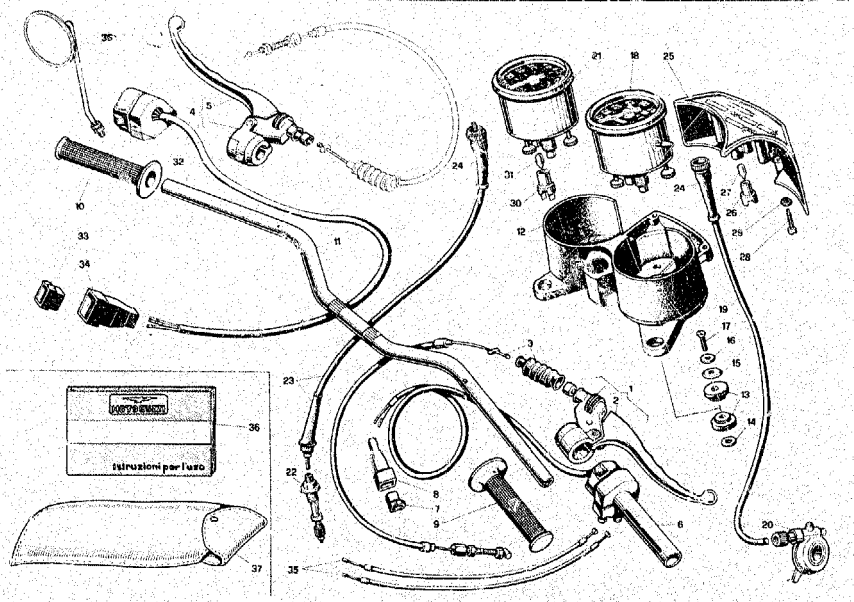

NOTE NOTES NOTES MARKE	POS. N	N. COD. CODE No. No. CODE CODE Nr.	Q.tà Q.ty Q.té M ge	DENOMINAZIONE	DESCRIPTION	DESIGNATION	BEZEICHNUNG
●	36	19 90 00 00	1	Libretto istruz. (I)	Rider's handbook (I)	Manuel d'entretien (I)	Betriebsanleitung (I)
●	36	19 90 00 01	1	Libretto istruz. (GB)	Rider's handbook (GB)	Manuel d'entret. (GB)	Betriebsanleitung (GB)
●	36	19 90 00 05	1	Libretto istruz. (D)	Rider's handbook (D)	Manuel d'entret. (D)	Betriebsanleitung (D)
	36	19 90 00 02	1	Libretto istruz. (F) V35 - V50	Rider's handbook (F) V35 - V50	Manuel d'entret. (F) V35 - V50	Betriebsanleitung (F) V35 - V50
	37	19 94 99 00	1	Dotazione completa	Complete equipment	Trousse à outils, compl	Werkzeugkasten
	38	14 70 98 50	1	Specchio retrovisivo (fornito a richiesta)	Driving mirror (optional)	Rétroviseur (sur demande)	Rückblickspiegel (auf Wunsch)

● I sottonotati particolari rappresentano le varianti per il mod. V50
Following items refer to V50 mod. only
Les pièces indiquées ci-dessous représentent les variantes pour le mod. V50
Die untergegebene Teile sind nur für Modell V50 gültig

	21	14 76 72 50	1	Contagiri	Rev. counter	Compte-tours	Drehzahlmesser
	36	19 90 00 51	1	Libretto istruz. (GB)	Rider's handbook (GB)	Manuel d'entret. (GB)	Betriebsanleitung (GB)
	36	19 90 00 53	1	Libretto istruz. (D)	Rider's handbook (D)	Manuel d'entret. (D)	Betriebsanleitung (D)
	36	19 90 00 54	1	Libretto istruz. (I)	Rider's handbook (I)	Manuel d'entret. (I)	Betriebsanleitung (I)

INDEX

BODY.....B9-B11
BUMPER GROUP.....B8

CLUTCH.....A5-A6
CLUTCH.....A13-A14
CONNECTING SYSTEM.A5-A6
CONTROLS.....B15-B19
COVERS.....A1-A2
CRANKCASE.....A1-A2
CYLINDER.....A3-A4
CYLINDER HEAD.....A3-A4

EXHAUST.....A8-A11
EXPORT VERSION
MODIFICATIONS.....D1-D2

FEEDING.....A3-A11
FORK.....B1
FRAME.....B5-B7
FRONT SUSPENSION..B12-B13
FRONT WHEEL.....B14

IGNITION.....C1-C4
INSTRUMENT PANEL..B18-B19

LIGHTING.....C5-C6
LUBRICATION.....A12

PEDAL.....B15-B17
PEDAL STARTER.....A15
POLICE VERSION....E1-E6

REAR SUSPENSION...B12-B13
REAR TRANSMISSION.B2-B4
REAR WHEEL.....B14

TIMING SYSTEM.....A7
TRANSMISSION.....A18-A20
TRANSMISSION CASE.A16-A17

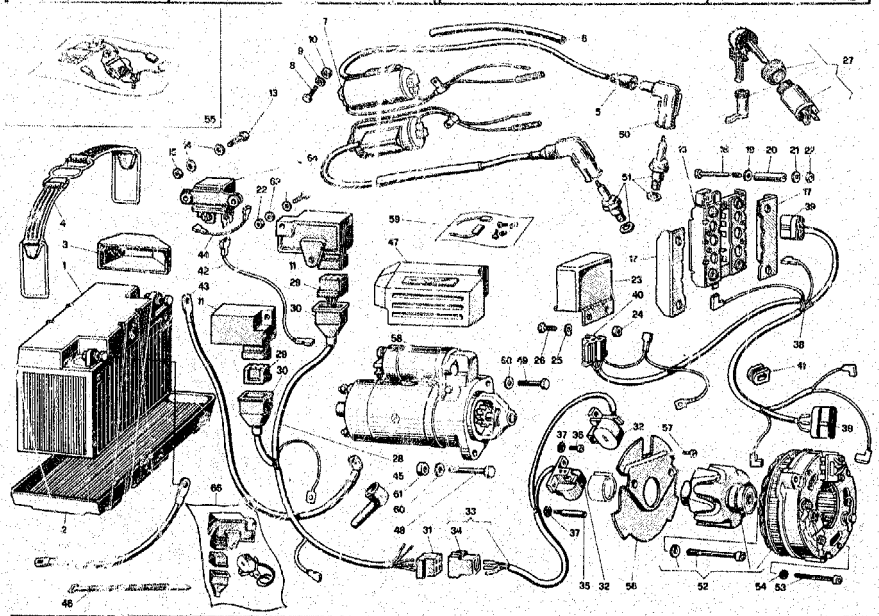

NOTE NOTES NOTES MARKE	POS N	N. COD CODE No. No. CODE CODE Nr.	Q.tà Q.ty Q.té M.ge	DENOMINAZIONE	DESCRIPTION	DESIGNATION	BEZEICHNUNG
	1	14 70 46 05	1	Accumulatore	Battery 12 V - 32 Ah	Batterie 12 V - 32 Ah	Batterie 12 V - 32 Ah
				1. 32Ah (a richiesta)	(optional)	(sur demande)	(auf Wunsch)
	1	14 70 46 50	1	Accumulatore 12 V - 20 Ah	Battery 12 V - 20 Ah	Batterie 12 V - 20 Ah	Batterie 12 V - 20 Ah
	2	14 70 70 00	1	Vaschetta	Battery holder	Plateau de batterie	Batterieplatte
	3	14 70 53 50	1	Cuneo ancor. accum.	Wedge	Coin	Keil
	4	19 70 48 00	1	Staffa fiss. accum.	Flexible clamp	Collier élastique	Elast. Klemme
	5	14 71 76 00	2	Cappuccio protez.	Protective cap	Chapeau de protect.	Schutzhülse
	6	19 71 86 00	2	Guaina per filo cand.	Sheath	Gaine	Schutzhülle
	7	19 71 65 00	2	Bobina d'accensione	Ignition coil	Bobine d'allumage	Zündspule
	8	98 20 25 25	5	Vite	Screw	Vis	Schraube
	9	95 02 11 05	5	Rondella ondulata	Washer	Rondelle	Scheibe
	10	92 60 22 05	5	Dado	Nut	Ecrou	Mutter
	11		2	Centralina (vedi pos. 66)	Box (see pos. 66)	Centrale (voir pos. 66)	Zentrale (siehen Pos. 66)
	12	12 73 25 00	1	Teleruttore avviam.	Relay	Relais	Relais
	13	98 05 42 12	2	Vite	Screw	Vis	Schraube
	14	95 10 00 59	4	Rondella	Washer	Rondelle	Scheibe
	15	92 60 22 05	2	Dado	Nut	Ecrou	Mutter
	16	17 70 43 00	1	Raddrizzatore Bosch	Rectifier Bosch	Redresseur Bosch	Gleichrichter Bosch
	17	61 70 42 00	2	Coperchio isolante	Cover	Couvercle	Deckel
	18	98 05 22 45	4	Vite	Screw	Vis	Schraube
	19	95 10 01 41	4	Rondella piana	Washer	Rondelle	Scheibe
	20	91 18 06 27	4	Tubetto distanziale	Spacer pipe	Tuyau entretoise	Distanzstuckrohr
	21	95 12 91 00	4	Rondella ondulata	Washer	Rondelle	Scheibe
	22	92 60 22 05	6	Dado	Nut	Ecrou	Mutter
	23	17 70 38 00	1	Regolatore Bosch	Regulator Bosch	Régulateur Bosch	Spannungsregler Bosch
	24	91 18 06 05	2	Distanziale	Spacer	Entretoise	Distanzstück
	25	95 12 91 00	2	Rondella ondulata	Washer	Rondelle	Scheibe
	26	98 05 42 14	2	Vite	Screw	Vis	Schraube
	27	19 73 68 01	1	Commutatore d'accens.	Ignition switch and	Contacteur d'allumage	Zündschalter und
				e serratura tappo carbur.	fuel tap lock	et serrure bouchon carb.	Kraftstoffstopfenschluss
	28	19 72 21 00	1	Gruppo cavi acc. elettr.	Cable kit	Kit de câbles	Kabelsatz
	29	19 72 17 00	2	Blocchetto	Block	Bloc	Block
	30	19 72 15 00	2	Cappuccio di protez.	Protective cap	Chapeau de protect.	Schutzhülse
	31	17 75 62 00	1	Connettore a 4 vie F	Connector	Branchement	Steckdose
	32	63 72 16 00	2	Captatore magnetico	Magn. picking up	Capteur magnétique	Magn. Fang
	33	19 72 22 00	1	Cablaggio compl.	Wire assembly	Groupe de fils	Kabelsatz

INDEX

BODY.....B9-B11
BUMPER GROUP.....B8

CLUTCH.....A5-A6
CLUTCH.....A13-A14
CONNECTING SYSTEM.A5-A6
CONTROLS.....B15-B19
COVERS.....A1-A2
CRANKCASE.....A1-A2
CYLINDER.....A3-A4
CYLINDER HEAD....A3-A4

EXHAUST.....A8-A11
EXPORT VERSION
MODIFICATIONS.....D1-D2

FEEDING.....A8-A11
FORK.....B1
FRAME.....B5-B7
FRONT SUSPENSION..B12-B13
FRONT WHEEL.....B14

IGNITION.....C1-C4
INSTRUMENT PANEL..B18-B19

LIGHTING.....C5-C6
LUBRICATION.....A12

PEDAL.....B15-B17
PEDAL STARTER.....A15
POLICE VERSION....E1-E6

REAR SUSPENSION...B12-B13
REAR TRANSMISSION.B2-B4
REAR WHEEL.....B14

TIMING SYSTEM.....A7
TRANSMISSION.....A18-A20
TRANSMISSION CASE.A16-A17

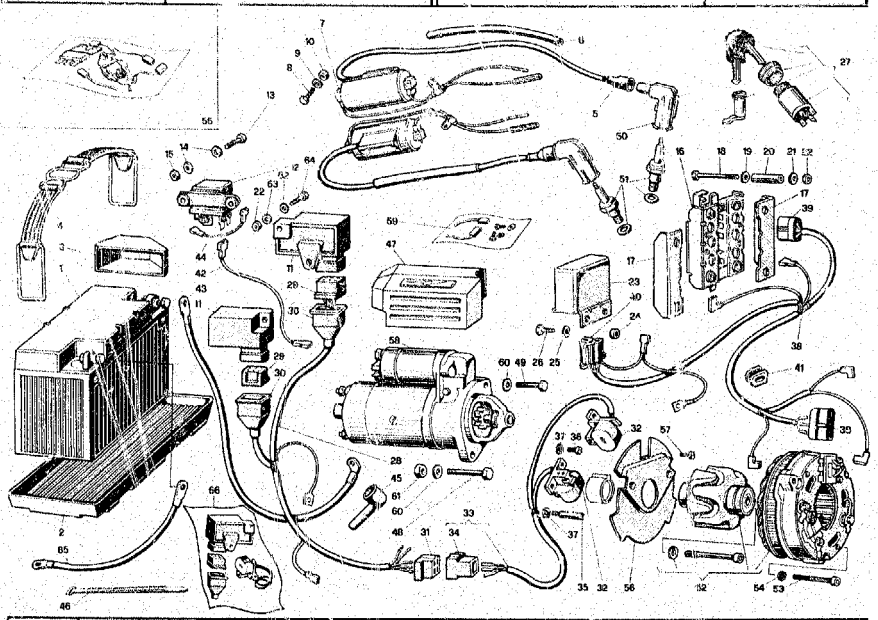

NOTE NOTES NOTES MARKE	POS. N.	N. COD. CODE No. No. CODE CODE Nr	Q.tà Q.ty Qté M.ge	DENOMINAZIONE	DESCRIPTION	DESIGNATION	BEZEICHNUNG
	34	17 73 63 00	1	Connettore a 4 vie M	Connector	Branchement	Steckdose
	35	19 72 26 00	2	Colonnetta	Support	Support	Halter
	36	98 20 25 10	2	Vite	Screw	Vis	Schraube
	37	95 02 11 05	4	Rondella elast. dentell.	Tooth washer	Rondelle dentée	Zahnscheibe
	38	19 74 74 00	1	Gruppo cavi alter.	Wire assembly	Groupe de fils	Kabelsatz
	39	61 71 25 00	2	Connettore a 3 vie	Connector	Branchement	Steckdose
	40	61 71 23 00	1	Connettore a 3 vie	Connector	Branchement	Steckdose
	41	19 00 77 00	1	Gommino passacavi	Rubber	Caoutchouc	Gummistück
	42	19 74 82 00	1	Cavo [illegible] tel.	Cable	Câble	Kabel
	43	19 74 80 00	1	Cavo [illegible] batt. al m.	Cable	Câble	Kabel
	44	19 74 83 00	1	Cavo da cont. del tel.	Cable	Câble	Kabel
	45	19 70 71 00	2	Cappuccio	Cap	Capuchon	Kappe
	46	14 60 96 50	12	Fascetta tenuta cavi	Clamp	Collier	Schelle
	47	19 73 33 50	1	Protezione	Guard	Protection	Schutz
	48	98 05 24 40	1	Vite	Screw	Vis	Schraube
	49	98 05 24 35	1	Vite	Screw	Vis	Schraube
	50	14 71 74 00	2	Attacco per cavo can.	Spark plug cap	Embout de bougie	Zündkerzenstecker
	51	19 71 70 00	2	Candela (Champion N6Y)	Spark plug (Champion N6Y)	Bougie (Champion NY6)	Zündkerze (Champion N6Y)
	51	19 71 70 01	2	Candela (Marelli CW 9 PL)	Spark plug (Marelli CW 9 PL)	Bougie (Marelli CW 9 PL)	Zündkerze (Marelli CW 9 PL)
	51	19 71 70 02	2	Candela (Bosch W 260 T30)	Spark plug (Bosch W 260 T30)	Bougie (Bosch W 260 T30)	Zündkerze (Bosch W 260 T30)
	51	19 71 70 03	2	Candela (Lodge 2HLNY)	Spark plug (Lodge 2HLNY)	Bougie (Lodge 2HLNY)	Zündkerze (Lodge 2HLNY)
	52	17 71 24 00	1	Generatore 14V - 20/21 A	Generator 14V - 20/21 A	Générateur 14V - 20/21 A	Stromgenerator 14V - 20/21 A
	53	98 62 02 45	3	Vite	Screw	Vis	Schraube
	54	95 02 11 05	3	Rosetta elastica	Spring washer	Rondelle élastique	Federscheibe
	55	17 71 99 00	1	Serie revis. generat.	Generator kit	Kit de générateur	Stromgener. Rep.-Satz
	56	19 72 25 00	1	Protezione captat.	Protection	Protection	Schutz
	57	98 28 04 12	2	Vite	Screw	Vis	Schraube
	58	14 73 07 06	1	Motorino avviamento	Starter	Démarreur	Anlassmotor
	59	14 73 05 70	1	Gruppo rev. motorino	Starter kit	Kit de démarreur	Anlassmotor - Rep.-Satz
	60	95 00 42 08	2	Rosetta	Washer	Rondelle	Scheibe
	61	92 80 22 08	1	Dado	Nut	Ecrou	Mutter
	62	95 00 42 05	2	Rondella superiore	Upper washer	Rondelle supérieure	Oberscheibe

INDEX

BODY.....B9-B11
BUMPER GROUP.....B8

CLUTCH.....A5-A6
CLUTCH.....A13-A14
CONNECTING SYSTEM.A5-A6
CONTROLS.....B15-B19
COVERS.....A1-A2
CRANKCASE.....A1-A2
CYLINDER.....A3-A4
CYLINDER HEAD.....A3-A4

EXHAUST.....A8-A11
EXPORT VERSION
MODIFICATIONS.....D1-D2

FEEDING.....A8-A11
FORK.....B1
FRAME.....B5-B7
FRONT SUSPENSION..B12-B13
FRONT WHEEL.....B14

IGNITION.....C1-C4
INSTRUMENT PANEL..B18-B19

LIGHTING.....C5-C6
LUBRICATION.....A12

PEDAL.....B15-B17
PEDAL STARTER.....A15
POLICE VERSION....E1-E6

REAR SUSPENSION...B12-B13
REAR TRANSMISSION.B2-B4
REAR WHEEL.....B14

TIMING SYSTEM.....A7
TRANSMISSION.....A18-A20
TRANSMISSION CASE.A16-A17

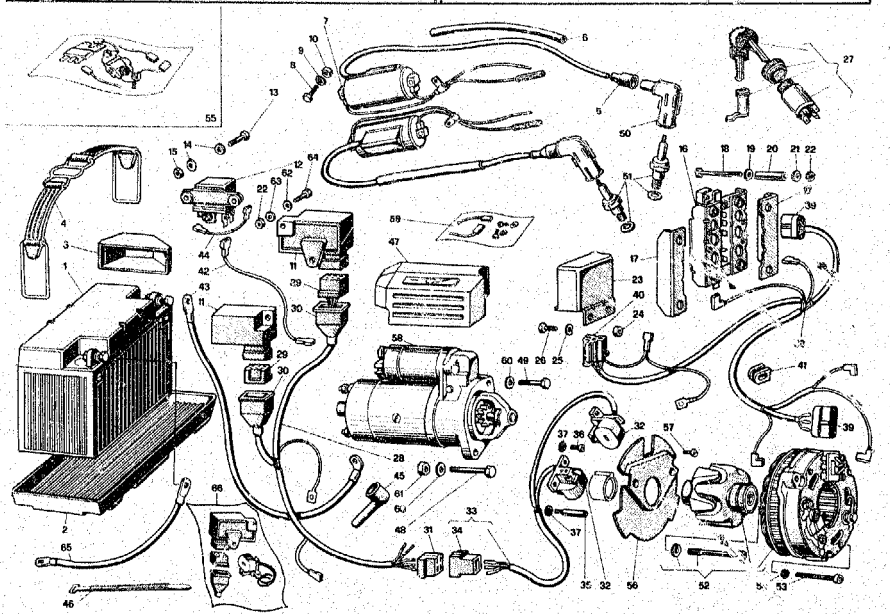

NOTE NOTES NOTES MARKE	POS. N.	N. COD. CODE No. No. CODE CODE Nr.	Q.tà Q.ty Q.té M.ge	DENOMINAZIONE	DESCRIPTION	DESIGNATION	BEZEICHNUNG
	63	95 10 00 59	6	Rondella	Washer	Rondelle	Scheibe
	64	98 05 42 16	4	Vite	Screw	Vis	Schraube
	65	19 74 84 00	1	Cavo da batt. a massa	Cable	Câble	Kabel
	66	19 72 13 00	2	Impianto accensione (comprende i particolari pos. 11 - 29 - 30 - 32 - quantità 1)	Electronic ignition (items pos. no. 11 - 29 - 30 - 32 included - quantity 1)	Allumage électronique (comprend les pièces nr. pos. 11 - 29 - 30 - 32 - quantité 1)	Elektr. Zündung (Teile Pos. Nr. 11 - 29 - 30 - 32 einhalt - Menge 1)

INDEX

BODY.....B9-B11
BUMPER GROUP.....B8

CLUTCH.....A5-A6
CLUTCH.....A13-A14
CONNECTING SYSTEM.A5-A6
CONTROLS.....B15-B19
COVERS.....A1-A2
CRANKCASE.....A1-A2
CYLINDER.....A3-A4
CYLINDER HEAD.....A3-A4

EXHAUST.....A8-A11
EXPORT VERSION
MODIFICATIONS.....D1-D2

FEEDING.....A8-A11
FORK.....B1
FRAME.....B5-B7
FRONT SUSPENSION..B12-B13
FRONT WHEEL.....B14

IGNITION.....C1-C4
INSTRUMENT PANEL..B18-B19

LIGHTING.....C5-C6
LUBRICATION.....A12

PEDAL.....B15-B17
PEDAL STARTER.....A15
POLICE VERSION....E1-E6

REAR SUSPENSION...B12-B13
REAR TRANSMISSION.B2-B4
REAR WHEEL.....B14

TIMING SYSTEM.....A7
TRANSMISSION.....A18-A20
TRANSMISSION CASE.A16-A17

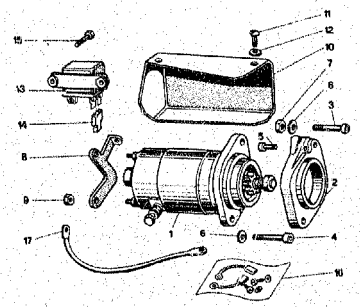

NOTE NOTES NOTES MARKE	POS. N.	N. COD. CODE No. No. CODE CODE Nr.	Q.tà Q.ty Q.té M.ge	DENOMINAZIONE	DESCRIPTION	DESIGNATION	BEZEICHNUNG
	1	*	1	Motorino avv. Bendix	Starter Bendix	Démarreur Bendix	Anlassmotor Bendix
	2	14 73 18 06	1	Piastra per motorino	Plate	Plaque	Platte
	3	98 82 04 50	1	Vite	Screw	Vis	Schraube
	4	98 82 04 35	1	Vite	Screw	Vis	Schraube
	5	98 82 24 20	1	Vite	Screw	Vis	Schraube
	6	95 00 42 08	2	Rosetta	Washer	Rondelle	Scheibe
	7	92 60 22 08	2	Dado	Nut	Ecrou	Mutter
	8	19 73 38 00	1	Sostegno prot. motor.	Support	Support	Halter
	9	92 63 01 05	2	Dado	Nut	Ecrou	Mutter
	10	19 73 32 00	1	Protezione	Guard	Protection	Schutz
	11	98 31 06 12	2	Vite	Screw	Vis	Schraube
	12	95 00 42 06	2	Rondella	Washer	Rondelle	Scheibe
	13	14 70 76 05	1	Teleruttore avviam.	Relay	Relais	Relais
	14	93 40 08 63	2	Faston maschio	Male "faston"	"Faston" mâle	Zapfen "Faston"
	15	98 05 22 20	2	Vite	Screw	Vis	Schraube
	16	14 73 05 71	1	Gruppo rev. motor.	Starter kit	Kit de démarreur	Anlassmotor Rep.-Satz
	17	19 74 84 00	3	Cavo per batt. teler.	Cable	Câble	Kabel

*** Il motorino avviamento Bendix non viene fornito a ricambio; in sostituzione viene fornito il motorino N. 14 73 07 06, da montarsi con i componenti previsti su tavola 18 - Pos. 12 - 42 - 43 - 44 - 47 - 48 - 49**
Starter Bendix is not avsilable as spare parts; starter No. 14 73 07 06 is supplied on its place and it must be assembled with items indicated on drawing 18 - Pos. 12 - 42 - 43 - 44 - 47 - 48 - 49
Le démarreur Bendix n'est pas disponible comme pièce detachée; le démarreur Nr. 14 73 07 06 est fourni à sa place et il doit être assemblé avec les pièces indiquées sur la table 18 - Nr. Pos. 42 - 43 - 44 - 47 - 48 - 49
Anlassmotor Bendix wird nicht als Ersatzteil geliefert; an seiner Stelle wird jetzt der Anlassmotor Nr. 14 73 07 06 geliefert, der mit den auf Bild 18 Positionnummern 12 - 42 - 43 - 44 - 47 - 48 gezeichneten Teilen aufgebaut werden muss.

INDEX

BODY.....B9-B11
BUMPER GROUP.....B8

CLUTCH.....A5-A6
CLUTCH.....A13-A14
CONNECTING SYSTEM.A5-A6
CONTROLS.....B15-B19
COVERS.....A1-A2
CRANKCASE.....A1-A2
CYLINDER.....A3-A4
CYLINDER HEAD.....A3-A4

EXHAUST.....A8-A11
EXPORT VERSION
MODIFICATIONS.....D1-D2

FEEDING.....A8-A11
FORK.....B1
FRAME.....B5-B7
FRONT SUSPENSION..B12-B13
FRONT WHEEL.....B14

IGNITION.....C1-C4
INSTRUMENT PANEL..B18-B19

LIGHTING.....C5-C6
LUBRICATION.....A12

PEDAL.....B15-B17
PEDAL STARTER.....A15
POLICE VERSION....E1-E6

REAR SUSPENSION...B12-B13
REAR TRANSMISSION.B2-B4
REAR WHEEL.....B14

TIMING SYSTEM.....A7
TRANSMISSION.....A18-A20
TRANSMISSION CASE.A16-A17

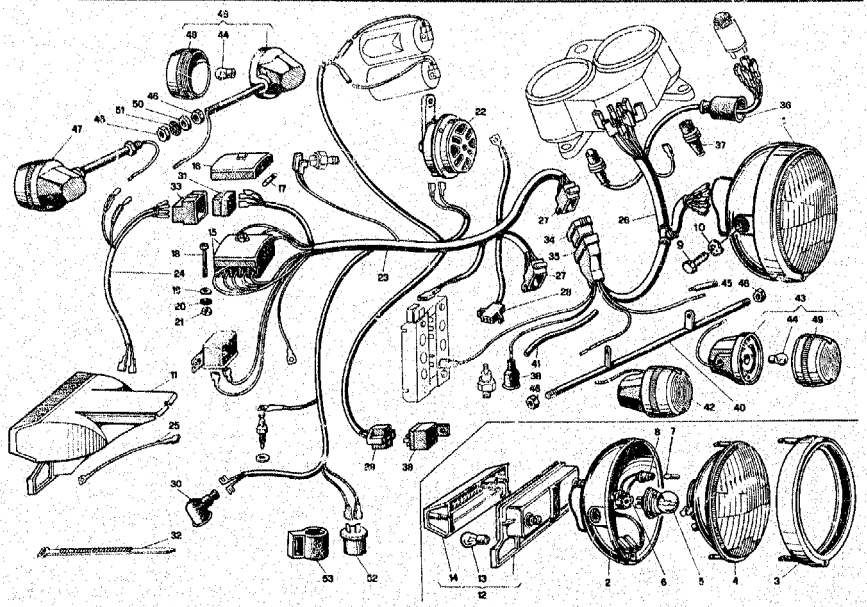

NOTE NOTES NOTES MARKE	POS. N.	N. COD. CODE No. No. CODE CODE Nr.	Q.tà Q.ty Q.té Mge	DENOMINAZIONE	DESCRIPTION	DESIGNATION	BEZEICHNUNG
	1	14 74 05 50	1	Proiettore anteriore	Headlight	Projecteur AV	Vord. Scheinwerfer
	2	14 74 04 58	1	Calotta	Body	Boîtier	Gehause
	3	14 74 04 56	1	Ghiera nero opaco	Mat black ring nut	Embout noir opaque	Opakschwarz Haltering
	4	14 74 04 55	1	Gruppo ottico	Head lamp	Optique de phare	Scheinwerfer Einsatz
	5	93 45 02 31	1	Lampada a sfera 40/45 W - 12 V	Bulb 40/45 W - 12 V	Ampoule 40/45 W - 12 V	Glühlampe 40/45 W - 12 V
	6	17 74 04 01	1	Zoccolo presa corrente	Socket	Douille	Anschluss-stecker
	7	93 45 01 19	*	Lampada luce città 4 W - 12 V	Lamp 4 W - 12 V	Lampe 4 W - 12 V	Lampe 4 W - 12 V
	8	17 74 04 05	1	Portalampada con cavo	Socket	Douille d'ampoule	Lampenfassung
	9	98 82 25 20	2	Vite fiss. proiettore	Screw	Vis	Schraube
	10	95 12 01 05	2	Rosetta elastica	Spring washer	Rondelle élastique	Federscheibe
	11	19 74 09 00	1	Fanalino post. compl.	Back light, compl.	Lanterne AR. compl.	Rücklicht, kpl.
	12	65 74 09 00	1	Fanalino posteriore	Back light	Lanterne AR	Rücklicht
	13	93 45 02 23	2	Lampada	Lamp	Lampe	Lampe
	14	65 74 17 00	1	Coppetta per fanalino	Cap	Capuchon	Kappe
	15	19 74 30 00	1	Morsettiera portafus.	Fuse box	Boîte de fusibles	Sicherungsdose
	16	19 74 31 00	1	Coperchio morsett.	Cover	Couvercle	Deckel
	17	17 74 25 50	6	Fusibile (16 A)	Fuse (16 A)	Fusible (16 A)	Schmelzeinsatz (16 A)
	18	98 20 25 30	2	Vite	Screw	Vis	Schraube
	19	95 00 02 05	2	Rondella piana	Washer	Rondelle	Scheibe
	20	95 02 11 05	2	Rondella dentellata	Tooth washer	Rondelle dentée	Zahnscheibe
	21	92 60 22 05	2	Dado	Nut	Ecrou	Mutter
	22	14 74 37 00	1	Avvisatore acustico	Horn	Avertisseur acoustique	Hupe
	23	19 74 71 00	1	Gruppo princip. cavi	Cable kit	Kit de câbles	Kabelsatz
	24	19 74 73 00	1	Gruppo cavi	Cable kit	Kit de câbles	Kabelsatz
	25	14 74 81 00	1	Cavo massa	Earthing cable	Fil de masse	Massband
	26	19 74 72 00	1	Gruppo cavi	Cable kit	Kit de câbles	Kabelsatz
	27	19 72 31 00	2	Connettore 12 vie f.	Connector	Branchement	Steckdose
	28	19 72 30 00	1	Connettore 3 vie f.	Connector	Branchement	Steckdose
	29	19 73 24 00	1	Presa pentapolare	Coupling	Prise	Gang
	30	12 73 61 00	1	Cappuccio per inter.	Cap	Capuchon	Kappe
	31	17 75 62 00	1	Connettore 4 vie m.	Connector	Branchement	Steckdose
	32	14 60 96 60	2	Fascetta	Clamp	Collier	Schelle
	33	17 73 63 00	1	Connettore 4 vie f.	Connector	Branchement	Steckdose
	34	61 74 05 51	1	Connettore 12 vie m.	Connector	Branchement	Steckdose
	35	17 75 67 00	1	Cappuccio connettore	Cap	Capuchon	Kappe

INDEX

BODY.....B9-B11
BUMPER GROUP.....B8

CLUTCH.....A5-A6
CLUTCH.....A13-A14
CONNECTING SYSTEM.A5-A6
CONTROLS.....B15-B19
COVERS.....A1-A2
CRANKCASE.....A1-A2
CYLINDER.....A3-A4
CYLINDER HEAD.....A3-A4

EXHAUST.....A8-A11
EXPORT VERSION
MODIFICATIONS.....D1-D2

FEEDING.....A8-A11
FORK.....B1
FRAME.....B5-B7
FRONT SUSPENSION..B12-B13
FRONT WHEEL.....B14

IGNITION.....C1-C4
INSTRUMENT PANEL..B18-B19

LIGHTING.....C5-C6
LUBRICATION.....A12

PEDAL.....B15-B17
PEDAL STARTER.....A15
POLICE VERSION....E1-E6

REAR SUSPENSION...B12-B13
REAR TRANSMISSION.B2-B4
REAR WHEEL.....B14

TIMING SYSTEM.....A7
TRANSMISSION.....A18-A20
TRANSMISSION CASE.A16-A17

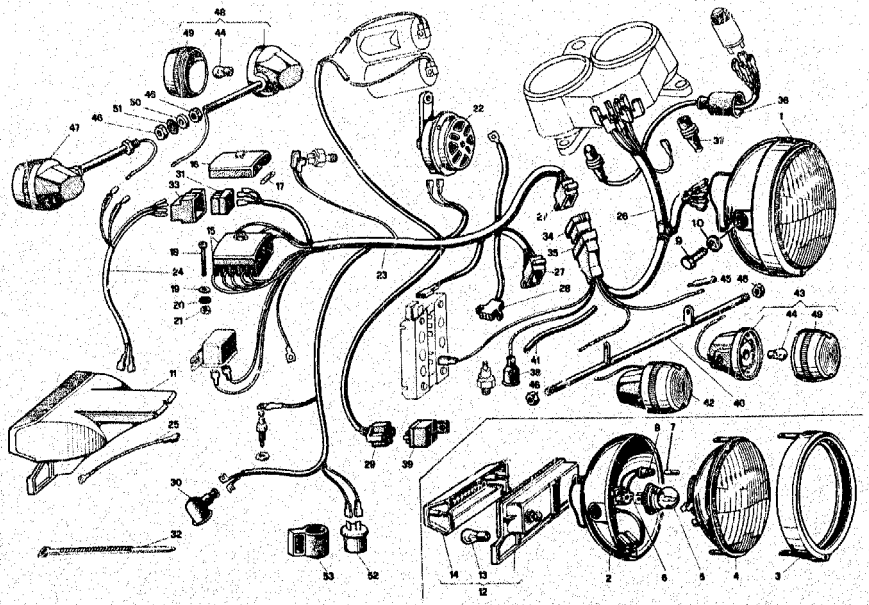

NOTE NOTES NOTES MARKE	POS. N.	N. COD. CODE No. No. CODE CODE Nr	Q.tà Q.ty Q.té M.ge	DENOMINAZIONE	DESCRIPTION	DESIGNATION	BEZEICHNUNG
*	36	25 74 13 25	1	Cappuccio protez.	Protective cap	Chapeau de protect.	Schutzhulse
	37	17 75 53 00	2	Cappuccio protez.	Protective cap	Chapeau de protect.	Schutzhulse
	38	12 71 76 00	1	Cappuccio per trasm.	Cap	Chapeau	Kappe
	39	15 73 25 00	1	Teleruttore 12V	Relay 12V	Relais 12V	Relais 12V
	40	18 75 13 00	1	Supp. ant. ind. direz.	Fr. ind. support	Support clign. AV	Vorderblinker Halter
*	41	823 92 00 80		Guaina per cavo nera	Hose	Gaine	Hulse
	42	14 75 06 50	1	Indicatore destro	R.H. indicator	Clignotant D	Blinker, R.
	43	14 75 06 51	1	Indicatore sinistro	L.H. indicator	Clignotant G	Blinker, L.
	44	93 45 01 29	4	Lampada 12V - 21W	Lamp 12V - 21W	Lampe 12V - 21W	Lampe 12V - 21W
*	45	823 92 20 37		Guaina cavo lampegg. sinistro (verde)	L.H. blinker cable hose (green)	Gaine câble clignot. G (vert)	Blinkerkabel, L. Hülse (grün)
	46	92 60 24 11	4	Dado	Nut	Ecrou	Mutter
	47	18 75 06 57	1	Indicat. poster. destro	R.H. rear indicator	Clignotant AR D	Hint. Blinker, R.
	48	18 75 06 56	1	Indicat. poster. sinistro	L.H. rear indicator	Clignotant AR G	Hint. Blinker, L.
	49	14 75 37 50	4	Coppetta per fanalino	Cap	Capuchon	Kappe
	50	14 75 34 50	2	Distanziale	Spacer	Entretoise	Distanzstück
	51	95 02 11 10	2	Rondella dentellata	Tooth washer	Rondelle dentée	Zahnscheibe
	52	17 75 05 20	1	Intermittenza	Intermittence	Centrale clignotants	Intermittenz
	53	17 75 12 00	1	Supporto elastico	Flexible support	Support élastique	Elast. Halter
	54	98 82 25 20	2	Vite fiss. proiettore	Screw	Vis	Schraube
	55	95 12 01 05	2	Rosetta elast. ondul.	Washer	Rondelle	Scheibe

* **Specificare la quantità in metri (1 m - 2 m - ecc.) - Indicate quantity required in meters (1 m - 2 m - etc.) Indiquer la quantité en mètres (1 m - 2 m - etc.) - Lieferbar in Meter (1 m - 2 m - etc.) bestellen**

INDEX

BODY.....B9-B11
BUMPER GROUP.....B8

CLUTCH.....A5-A6
CLUTCH.....A13-A14
CONNECTING SYSTEM.A5-A6
CONTROLS.....B15-B19
COVERS.....A1-A2
CRANKCASE.....A1-A2
CYLINDER.....A3-A4
CYLINDER HEAD.....A3-A4

EXHAUST.....A8-A11
EXPORT VERSION
MODIFICATIONS.....D1-D2

FEEDING.....A8-A11
FORK.....B1
FRAME.....B5-B7
FRONT SUSPENSION..B12-B13
FRONT WHEEL.....B14

IGNITION.....C1-C4
INSTRUMENT PANEL..B18-B19

LIGHTING.....C5-C6
LUBRICATION.....A12

PEDAL.....B15-B17
PEDAL STARTER.....A15
POLICE VERSION....E1-E6

REAR SUSPENSION...B12-B13
REAR TRANSMISSION.B2-B4
REAR WHEEL.....B14

TIMING SYSTEM.....A7
TRANSMISSION.....A18-A20
TRANSMISSION CASE.A16-A17

DEUTSCHLAND AUSFUHRUNG - V35

TAVOLA - DRAWING TABLE - BILD 1

BASAMENTO E COPERCHI - CRANKCASE & COVERS
CARTER MOTEUR - COUVERCLES - KURBELGEH. - DECKEL

—	19 99 10 00	1	Motore compl. carbur.	Engine with carbur.	Moteur avec carbur.	Motor with Vergaser
—	19 99 14 00	1	Motore e cambio com.	Engine & transm. com.	Moteur et boîte à vit.	Motor und Schaltung

TAVOLA - DRAWING TABLE - BILD 2

TESTA E CILINDRO - HEAD AND CYLINDER
CULASSE ET CYLINDRE - KOPF UND ZYLINDER

1	19 02 21 00	1	Testa destra compl.	R.H. cylinder head, com.	Culasse D compl.	Zylinderkopf R. kpl.
2	19 02 22 00	1	Testa sinistra compl.	L.H. cylinder head, com.	Culasse G compl.	Zylinderkopf L. kpl.
26	19 11 50 00	1	Pipa aspirazione destra	R.H. manifold	Pipe D	Ansaugkrummer, R.
27	19 11 50 01	1	Pipa aspirazione sinistra	L.H. manifold	Pipe G	Ansaugkrummer, L.

TAVOLA - DRAWING TABLE - BILD 4

DISTRIBUZIONE - TIMING SYSTEM
DISTRIBUTION - STEUERUNG

1	19 03 60 00	2	Valvola aspirazione	Intake valve	Soupape d'admission	Einlassventil
2	19 03 61 00	2	Valvola scarico	Exhaust valve	Soupape d'échapp.	Auslassventil

TAVOLA - DRAWING TABLE - BILD 5

ALIMENTAZIONE - SCARICO - FEEDING - EXHAUST
ALIMENTATION - ECHAPP. - ZUFUHRUNG - AUSPUFF

1	19 11 26 00	1	Carburat. dx VHB 20 F	R.H. carbur. VHB 20 F	Carbur. D VHB 20 F	Vergaser R. VHB 20 F
2	19 11 26 01	1	Carbur. sx VHB 20 F	L.H. carbur. VHB 20 F	Carbur. G VHB 20 F	Vergaser L. VHB 20 F
72	61 93 49 40	1	Spillo conico	Needle	Pointeau conique	Kon. Nadel
90	39 93 57 01	1	Getto massimo	Main jet	Gicleur principal	Hauptdüse

TAVOLA - DRAWING TABLE - BILD 7A

FRIZIONE - CLUTCH
EMBRAYAGE - KUPPLUNG

10	19 21 11 05	1	Ingran. rinvio A.P. (Z = 25)	O.S. intermediate gear (Z = 25)	Engren. de renvoi A.P. (Z = 25)	Zahnradvorgelg. H.W. (Z = 25)

TAVOLA - DRAWING TABLE - BILD 8

SCATOLA CAMBIO - TRANSMISSION CASE
CARTER DE BOITE A VIT. - GETRIEBEGEHÄUSE

—	19 99 15 00	1	Cambio completo e campana	Transmission assy and housing	Boîte à vitesse compl. et carter	Schaltgetriebe, kpl und Gehäuse

TAVOLA - DRAWING TABLE - BILD 9

CAMBIO - TRANSMISSION
BOITE A VITESSES - SCHALTGETRIEBE

57	19 21 11 06	1	Ingranaggio rinvio A.P. (Z = 25)	Idle gear M.S. (Z = 25)	Pignon intermédiaire (Z = 25)	Zahnradvorgelege (Z = 25)

TAVOLA - DRAWING TABLE - BILD 12

TELAIO - FRAME
CHASSIS - RAHMEN

—	19 91 84 00	1	Targhetta identificaz.	Identification plate	Plaque d'identification	Schildchen
—	45 91 85 70	2	Rivetto	Rivet	Rivet	Niet

TAVOLA - DRAWING TABLE - BILD 17

STRUMENTAZ.-COMANDI - INSTR. PANEL - CONTROLS
TABL. DE BORD - COMM. - INSTRUMENTENBRETT - ANTR.

21	14 76 72 50	1	Contagiri	Rev. counter	Compte-tours	Drehzahlmesser
36	19 90 00 05	1	Libretto istruz. (D)	Rider's handbook (D)	Manuel d'entret. (D)	Betriebsanleitung (D)
38	14 76 98 50	1	Specchietto retrovisore	Driving mirror	Rétroviseur	Rückblickspiegel

INDEX

BODY.....B9-B11
BUMPER GROUP.....B8

CLUTCH.....A5-A6
CLUTCH.....A13-A14
CONNECTING SYSTEM.A5-A6
CONTROLS.....B15-B19
COVERS.....A1-A2
CRANKCASE.....A1-A2
CYLINDER.....A3-A4
CYLINDER HEAD.....A3-A4

EXHAUST.....A8-A11
EXPORT VERSION
MODIFICATIONS.....D1-D2

FEEDING.....A8-A11
FORK.....B1
FRAME.....B5-B7
FRONT SUSPENSION..B12-B13
FRONT WHEEL.....B14

IGNITION.....C1-C4
INSTRUMENT PANEL..B18-B19

LIGHTING.....C5-C6
LUBRICATION.....A12

PEDAL.....B15-B17
PEDAL STARTER.....A15
POLICE VERSION....E1-E6

REAR SUSPENSION...B12-B13
REAR TRANSMISSION.B2-B4
REAR WHEEL.....B14

TIMING SYSTEM.....A7
TRANSMISSION.....A18-A20
TRANSMISSION CASE.A16-A17

ONE ESTERO - EXPORT VERSION - VERSION EXPORT - AUSLAND AUSFUHRUNG - EXPORT UITVOERING - VERSIONE ESTERO - EXPORT VERSIONS - VERSIONS EXPORT

USA VERSION - V50

TAVOLA - DRAWING
TABLE - BILD **17**

STRUMENTAZIONE - COMANDI - INSTR. PANEL - CONTROLS
TABL. DE BORD - COMM. - INSTRUMENTENBRETT. - ANTR.

18	19 76 16 00	1	Tachimetro contamiglia	Speedometer miles-ind.	Tachym. Compt.miles	Tachometer-Milen-Zähl.
25	19 76 91 20	1	Supporto con gemme	Support with name	Support avec emblème	Halter mit Schild

TAVOLA - DRAWING
TABLE - BILD **19**

ILLUMINAZIONE - LIGHTING
SIGNALS LUMINEUX - BELEUCHTUNG

1	14 74 05 81	1	Faro anteriore	Headlight	Projecteur AV	Vord. Scheinwerfer
--	39 74 03 02	1	Vite fiss. ghiera	Screw	Vis	Schraube
3	39 74 04 02	1	Ghiera	Ring nut	Embout	Halterring
	17 74 03 60	1	Vite regolazione	Adjusting screw	Vis de réglage	Einstellschraube
--	17 74 03 65	1	Molla di regolazione	Spring	Ressort	Feder
--	17 74 03 62	1	Nottolino	Pawl	Rochet	Sperrklinke
--	39 74 03 06	1	Perno di regolazione	Pin	Goujon	Stift
--	17 74 03 63	1	Anello bezning	Ring	Bague	Ring
4	14 74 04 83	1	Gruppo ottico con lampada 12V - 40/45W	Head lamp with lamp 12V - 40/45W	Optique de phare avec lampe 12V - 40/45W	Scheinwerfer Einsatz mit Lampe 12V - 40/45W
--	39 74 05 30	6	Molla di contrasto	Spring	Ressort	Feder
9	98 82 25 20	2	Bullone fiss. proiett.	Bolt	Boulon	Bolzen
10	95 12 01 05	2	Rosetta elastica	Spring washer	Rondelle élastique	Federscheibe
--	17 74 03 66	1	Vite autofil. fiss. capp.	Screw	Vis	Schraube
--	17 74 04 67	1	Cappuccio	Cap	Capuchon	Kappe
A2	14 75 06 80	1	Indicat. anter. destro	R.H. front indicator	Clignotant AV D.	Vord. Blinker, R.
43	14 75 06 81	1	Indicat. anter. sinistro	L.H. front indicator	Clignotant AV G.	Vord. Blinker, L.
47	19 75 16 70	1	Indicat. poster. destro	R.H. rear indicator	Clignotant AR D.	Hint. Blinker, R.
48	19 75 16 71	1	Indicat. poster. sinistro	L.H. rear indicator	Clignotant AR G.	Hint. Blinker, L.
49	14 75 37 80	4	Coppetta per indicatori	Cap	Capuchon	Kappe

NEDERLANDSE UITVOERING - V50

TAVOLA - DRAWING
TABLE - BILD **5**

ALIMENTAZIONE - SCARICO - FEEDING - EXHAUST
ALIMENTATION - ECHAPP. - ZUFUHRUNG - AUSPUFF

34	19 12 07 60	1	Tubo scarico dx	R.H. exhaust pipe	Tuyau d'échapp. D.	Auspuffrohr R.
35	19 12 07 61	1	Tubo scarico sx	L.H. exhaust pipe	Tuyau d'échapp. G.	Auspuffrohr L.

INDEX

BODY.....B9-B11
BUMPER GROUP.....B8

CLUTCH.....A5-A6
CLUTCH.....A13-A14
CONNECTING SYSTEM.A5-A6
CONTROLS.....B15-B19
COVERS.....A1-A2
CRANKCASE.....A1-A2
CYLINDER.....A3-A4
CYLINDER HEAD.....A3-A4

EXHAUST.....A8-A11
EXPORT VERSION
MODIFICATIONS.....D1-D2

FEEDING.....A8-A11
FORK.....B1
FRAME.....B5-B7
FRONT SUSPENSION..B12-B13
FRONT WHEEL.....B14

IGNITION.....C1-C4
INSTRUMENT PANEL..B18-B19

LIGHTING.....C5-C6
LUBRICATION.....A12

PEDAL.....B15-B17
PEDAL STARTER.....A15
POLICE VERSION....E1-E6

REAR SUSPENSION...B12-B13
REAR TRANSMISSION.B2-B4
REAR WHEEL.....B14

TIMING SYSTEM.....A7
TRANSMISSION.....A18-A20
TRANSMISSION CASE.A16-A17

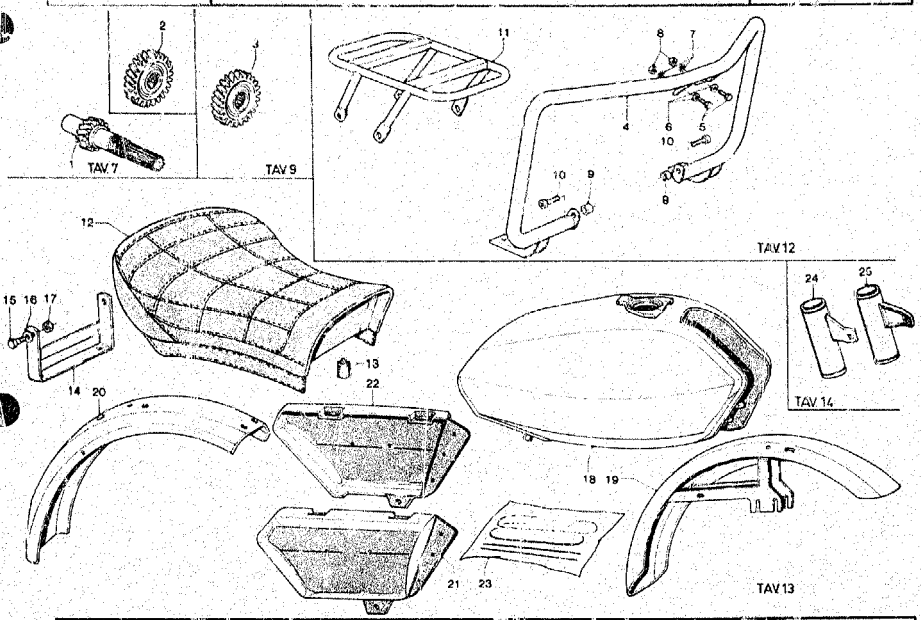

NOTE NOTES NOTES MARKE	POS. N.	N. COD. CODE No. No. CODE CODE Nr.	Q.tà Qty Qté M.ge	DENOMINAZIONE	DESCRIPTION	DESIGNATION	BEZEICHNUNG

TAVOLA 1

–		19 99 14 11	1	Motore e cambio V35	Engine & transm. V35	Mot. e boîte vit. V35	Motor u. Schaltgetr. V35
–		19 99 14 90	1	Motore e cambio V50	Engine & transm. V50	Mot. et boîte vit. V50	Motor u. Schaltgetr. V50
–		19 99 15 00	1	Cambio V35	Transmission - V35	Boîte à vitesses V35	Schaltgetriebe - V35
–		19 99 15 10	1	Cambio V50	Transmission - V50	Boîte à vitesses V50	Schaltgetriebe - V50

TAVOLA 7

(vale solo per modello V50 - for V50 model only - seulement pour modèle V50 - nur für V50 Modell)

1		19 21 07 00	1	Albero rinvio (Z = 13)	Countershaft (Z = 13)	Arbre intérm. (Z = 13)	Vorgelegewelle (Z = 13)

(avviamento a pedale - starter control lever - levier commande démarrage - Starterhebel)

2		19 21 11 05	1	Ingran. rinvio A.P. (V35 Z = 25)	O.S. intermediate gear (V35 Z = 25)	Engren. de renvo. A.P. (V35 Z = 25)	Zahnradvorgel. H.W. (V35 Z = 25)
2		19 21 11 00	1	Ingran. rinvio A.P. (V50 Z = 24)	O.S. intermediate gear (V50 Z = 24)	Engren. de renvoi A.P. (V50 Z = 24)	Zahnradvorgel. H.W. (V50 Z = 24)

TAVOLA 9

(vale solo per modello V50 - for V50 model only - seulement pour modèle V50 - nur für V50 Modell)

3		19 21 11 01	1	Ingran. rinvio A.P. (Z = 24)	O.S. intermediate gear (Z = 24)	Engren. de renvoi A.P. (Z = 24)	Zahnradvorgel. H.W. (Z = 24)

INDEX

BODY.....B9-B11
BUMPER GROUP.....B8

CLUTCH.....A5-A6
CLUTCH.....A13-A14
CONNECTING SYSTEM.A5-A6
CONTROLS.....B15-B19
COVERS.....A1-A2
CRANKCASE.....A1-A2
CYLINDER.....A3-A4
CYLINDER HEAD.....A3-A4

EXHAUST.....A8-A11
EXPORT VERSION
MODIFICATIONS.....D1-D2

FEEDING.....A8-A11
FORK.....B1
FRAME.....B5-B7
FRONT SUSPENSION..B12-B13
FRONT WHEEL.....B14

IGNITION.....C1-C4
INSTRUMENT PANEL..B18-B19

LIGHTING.....C5-C6
LUBRICATION.....A12

PEDAL.....B15-B17
PEDAL STARTER.....A15
POLICE VERSION....E1-E6

REAR SUSPENSION...B12-B13
REAR TRANSMISSION.B2-B4
REAR WHEEL.....B14

TIMING SYSTEM.....A7
TRANSMISSION.....A18-A20
TRANSMISSION CASE.A16-A17

V35-V50 — VARIANTI POLIZIA — E 2

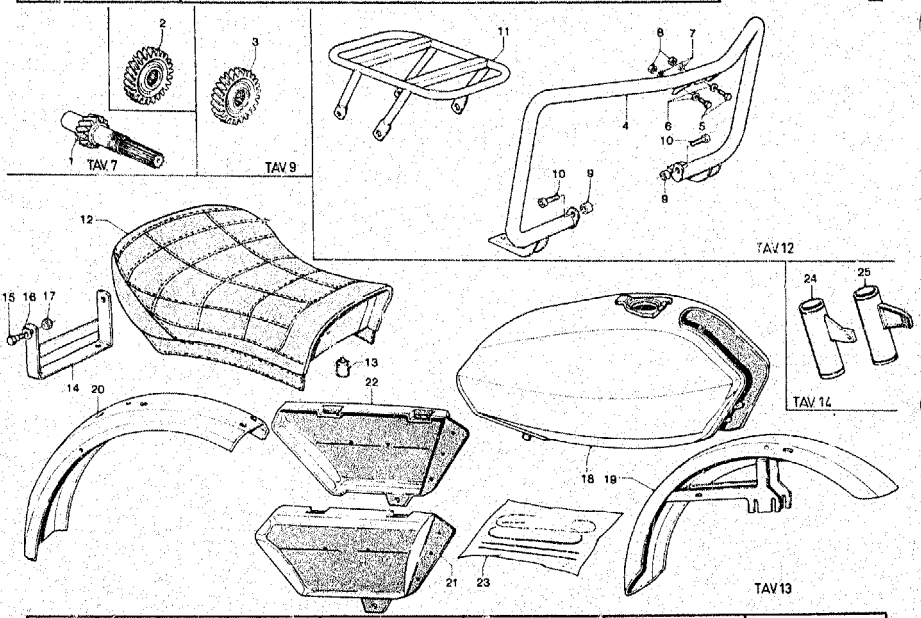

NOTE NOTES NOTES MARKE	POS. N.	N. COD CODE No No. CODE CODE Nr.	Q.tà Q.ty Q.té M.ge	DENOMINAZIONE	DESCRIPTION	DESIGNATION	BEZEICHNUNG

TAVOLA 12

4	19 45 02 90	1	Paraurti ant. compl.	Front bar, compl.	Pare-choc AV compl.	Vord. Stossstange, kpl.
5	98 05 44 20	2	Vite sup. fiss. paraurti	Screw	Vis	Schraube
6	95 00 42 08	2	Ranella piana	Washer	Rondelle	Scheibe
7	95 02 11 08	2	Ranella dentellata	Washer	Rondelle	Scheibe
8	92 60 22 08	2	Dado	Nut	Ecrou	Mutter
9	91 18 11 12	2	Distanziale per paraurti	Spacer	Entretoise	Distanzstuck
10	98 62 05 40	2	Vite inf. fiss. paraurti	Screw	Vis	Schraube
11	19 46 65 90	1	Portapacchi compl.	Carrier, compl.	Porte-bagages, compl.	Gepackhalter, kpl

TAVOLA 13

12	19 46 05 90	1	Sella monoposto	Saddle	Selle	Sattel
13	19 46 16 90	2	Tampone per sella	Rubber ring	Disque en caoutchouc	Gummiring
14	19 46 23 90	1	Cavalloto fiss. sella	U-bolt	Etrier	Schelle
15	98 05 44 20	2	Vite fiss. sella	Screw	Vis	Schraube
16	61 27 03 00	2	Ranella per vite	Washer	Rondelle	Scheibe
17	92 63 01 08	2	Dado per vite	Nut	Ecrou	Mutter
18	19 10 02 93	1	Serbatoio (nero)	Fuel tank (black)	Réservoir (noir)	Behälter (schwarz)
18	19 10 02 97	1	Serbatoio (blu Roma)	Fuel tank (blue Roma)	Réservoir (bleu Roma)	Behälter (blau Roma)
19	19 43 43 93	1	Parafango anter. (bianco) in lamiera	Front fender (white) (sheet)	Aile AV (blanc) en tôle	Vord. Kotflügel (weiss) (Blech)
19	19 43 44 93	1	Parafango anter. (bianco) in plastica	Front fender (white) (plastic)	Aile AV (blanc) en plastique	Vord. Kotflügel (weiss) (plastisch)
20	19 43 70 93	1	Parafango post. (bianco)	Rear fende: (white)	Aile AR (blanc)	Hint. Kotflügel (weiss)
21	19 47 62 93	1	Coperchio dx (nero)	R.H. cover (black)	Couvercle D (noir)	Deckel, R. (schwarz)
21	19 47 62 97	1	Coperchio dx (bleu Roma)	R.H. cover (blue Roma)	Couvercle D (bleu Roma)	Deckel, R. (blau Roma)
22	19 47 63 93	1	Coperchio sx (nero)	L.H. cover (black)	Couvercle G (noir)	Deckel, L. (schwarz)
22	19 47 63 97	1	Coperchio sx (bleu Roma)	L.H. cover (blue Roma)	Couvercle G (bleu Roma)	Deckel, L. (blau Roma)
23	19 92 33 90	1	Serie decalcomanie	Decal set	Jeu de décalcom.	Abziehbildsatz
—	00 95 00 21	1	Kg. 1 vernice (nero)	Kg. 1 paint (black)	Kg. 1 vernis (noir)	Kg. 1 Lack (schwarz)
—	00 95 00 25	1	Kg. 1 vernice (bianca)	Kg. 1 paint (white)	Kg. 1 vernis (blanc)	Kg. 1 Lack (weiss)
—	00 95 00 30	1	Kg. 1 vernice (bleu Roma)	Kg. 1 paint (blue Roma)	Kg. 1 vernis (bleu Roma)	Kg. 1 Lack (blau Roma)

INDEX

BODY.....B9-B11
BUMPER GROUP.....B8

CLUTCH.....A5-A6
CLUTCH.....A13-A14
CONNECTING SYSTEM.A5-A6
CONTROLS.....B15-B19
COVERS.....A1-A2
CRANKCASE.....A1-A2
CYLINDER.....A3-A4
CYLINDER HEAD.....A3-A4

EXHAUST.....A8-A11
EXPORT VERSION
MODIFICATIONS.....D1-D2

FEEDING.....A8-A11
FORK.....B1
FRAME.....B5-B7
FRONT SUSPENSION..B12-B13
FRONT WHEEL.....B14

IGNITION.....C1-C4
INSTRUMENT PANEL..B18-B19

LIGHTING.....C5-C6
LUBRICATION.....A12

PEDAL.....B15-B17
PEDAL STARTER.....A15
POLICE VERSION....E1-E6

REAR SUSPENSION...B12-B13
REAR TRANSMISSION.B2-B4
REAR WHEEL.....B14

TIMING SYSTEM.....A7
TRANSMISSION.....A18-A20
TRANSMISSION CASE.A16-A17

E3

VARIANTI POLIZIA

V35-V50

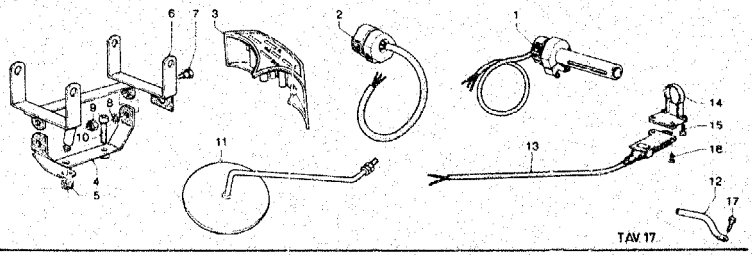

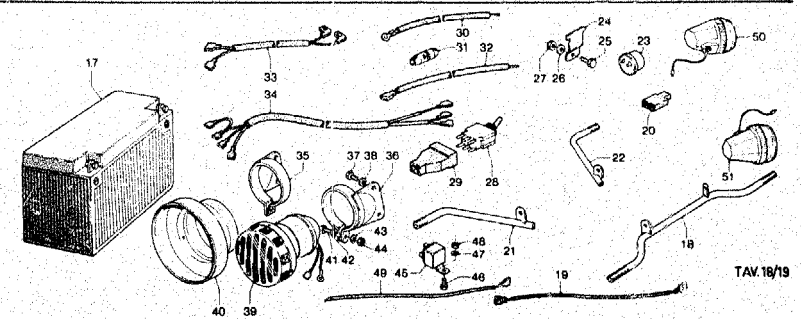

NOTE NOTES NOTES MARKE	POS. N	N. COD. CODE No. No. CODE CODE Nr.	Q.tà Q.ty Q.té M.ge	DENOMINAZIONE	DESCRIPTION	DESIGNATION	BEZEICHNUNG
TAVOLA 14							
	24	19 49 61 93	1	Fodero dx per forcella (nero)	R.H. stay tube for fork (black)	Tuyau étai D (noir)	Stutzrohr, R (schwarz)
	24	19 49 61 97	1	Fodero dx per forcella (bleu Roma)	R.H. stay tube (blue Roma)	Tuyau étai D (bleu Roma)	Stützrohr, R (blau Roma)
	25	19 49 62 93	1	Fodero sx per forcella (nero)	L.H. stay tube (black)	Tuyau étai G (noir)	Stutzrohr, L (schwarz)
	25	19 49 62 97	1	Fodero sx per forcella (bleu Roma)	L.H. stay tube (blue Roma)	Tuyau étai G (bleu Roma)	Stutzrohr, L (blau Roma)
TAVOLA 17							
	1	65 60 34 20	1	Impugnatura com. gas	Throttle control	Commande de gaz	Gasregelung
	2	65 73 80 20	1	Dispos. ind. avvis.	Horn control	Dispos. comm. avv. ac.	Hupevorrichtung
	3	19 76 89 00	1	Supporto gemme	Name support	Support emblème	Schildhalter
	4	19 50 23 90	1	Supporto telec. fisso	Support	Support	Halter
	5	91 55 10 85	1	Gommino	Rubber	Caoutchouc	Gummistück
	6	19 50 28 90	1	Supp. telecom. mobile	Support	Support	Halter
	7	98 06 43 16	2	Vite per fulcro	Screw	Vis	Schraube
	8	95 02 11 06	2	Ranella dentellata	Washer	Rondelle	Scheibe
	9	92 63 01 06	2	Dado autobloccante	Self-locking nut	Ecrou à autoblocage	Hutmutter
	10	98 83 04 45	2	Vite fiss. telecom.	Screw	Vis	Schraube
	11	14 76 98 50	1	Specchio retrovisivo	Driving mirror	Rétroviseur	Rückblickspiegel
	12	17 30 28 45	1	Attacco microtelefono	Support	Support	Halter
	13	19 75 63 90	1	Pulsante teleruttore	Push-button, compl.	Poussoir, compl.	Knopf, kpl.
	14	18 50 40 80	1	Supporto pulsante	Support	Support	Stutze
	15	98 20 03 12	2	Vite fiss. supporto	Screw	Vis	Schraube
	16	98 20 03 06	2	Vite fiss. puls. supp.	Screw	Vis	Schraube
	17	98 07 43 16	1	Vite fiss. att. microtelef.	Screw	Vis	Schraube

INDEX

BODY.....B9-B11
BUMPER GROUP.....B8

CLUTCH.....A5-A6
CLUTCH.....A13-A14
CONNECTING SYSTEM.A5-A6
CONTROLS.....B15-B19
COVERS.....A1-A2
CRANKCASE.....A1-A2
CYLINDER.....A3-A4
CYLINDER HEAD.....A3-A4

EXHAUST.....A8-A11
EXPORT VERSION
MODIFICATIONS.....D1-D2

FEEDING.....A8-A11
FORK.....B1
FRAME.....B5-B7
FRONT SUSPENSION..B12-B13
FRONT WHEEL.....B14

IGNITION.....C1-C4
INSTRUMENT PANEL..B18-B19

LIGHTING.....C5-C6
LUBRICATION.....A12

PEDAL.....B15-B17
PEDAL STARTER.....A15
POLICE VERSION....E1-E6

REAR SUSPENSION...B12-B13
REAR TRANSMISSION.B2-B4
REAR WHEEL.....B14

TIMING SYSTEM.....A7
TRANSMISSION.....A18-A20
TRANSMISSION CASE.A16-A17

V35-V50 — VARIANTI POLIZIA — E4

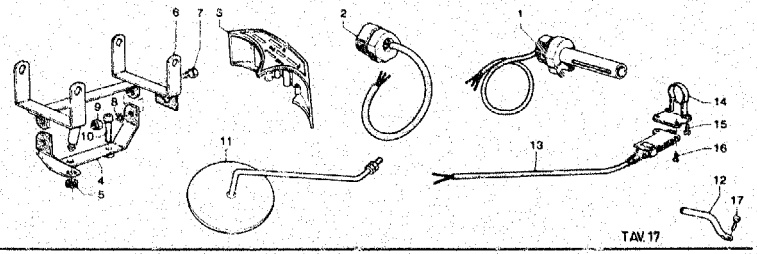

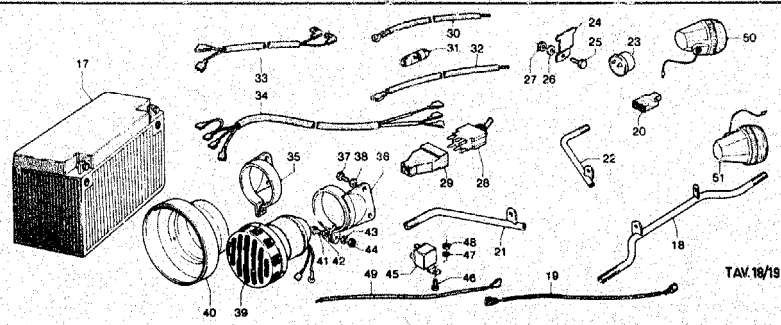

NOTE NOTES NOTES MARKE	POS. N.	N. COD. CODE No. No. CODE CODE Nr.	Q.tà Q.ty Q.té M.ge	DENOMINAZIONE	DESCRIPTION	DESIGNATION	BEZEICHNUNG
TAVOLA 18/19							
	17	14 70 45 00	1	Accumulat. 12V - 32Ah	Battery 12V - 32Ah	Batterie 12V - 32Ah	Batterie 12V - 32Ah
	18	19 75 13 80	1	Supporto ant. indic.	Support	Support	Stütze
	19	19 76 83 00	1	Cavo cont. 30/85 teler.	Cable	Câble	Kabel
	20	93 40 03 63	2	Innesto a 3 vie	Joint	Connexion	Anschluss
	21	19 75 85 90	1	Braccio destro	R.H. support	Support D	Stütze, R.
	22	19 75 85 91	1	Braccio sinistro	L.H. support	Support G	Stütze, L.
	23	17 75 05 20	2	Intermittenza	Intermittence	Centrale clignotant	Intermittenz
	24	17 75 04 00	1	Squadretta	Support	Equerre	Abstutzwinkel
	25	98 05 43 14	1	Vite	Screw	Vis	Schraube
	26	95 00 02 06	2	Ranella piana	Washer	Rondelle	Scheibe
	27	92 60 22 06	1	Dado per vite	Nut	Ecrou	Mutter
	28	13 74 57 40	1	Commutatore ins. lamp.	Selector switch	Commutateur	Reglerschalter
	29	17 75 60 00	1	Cappuccio di protez.	Cap	Capuchon	Kappe
	30	18 75 71 81	2	Cavo da batt. a fusib.	Cable	Câble	Kabel
	31	13 74 25 40	2	Conten. compl. fusib.	Container, compl.	Container compl.	Behälter, kpl.
	32	19 75 71 90	1	Cavo da fus. a interm.	Cable	Câble	Kabel
	33	18 72 01 50	1	Gruppo cavi coll. int.	Cable set	Fils	Leitung
	34	19 75 31 90	1	Gruppo cavi ins. lamp.	Cable set	Fils	Leitung
	35	19 74 42 90	1	Supporto sirena dx	R.H. siren support	Support sirène D	Stütze für Sirene, R
	36	19 74 42 91	1	Supporto sirena sx	L.H. siren support	Support sirène G	Stütze für Sirene, L
	37	98 05 44 16	4	Vite fiss. supporti	Screw	Vis	Schraube
	38	95 02 11 06	4	Ranella elastica	Spring washer	Rondelle élastique	Federscheibe
	39	19 74 37 90	2	Elettrosirena	Electric siren	Sirène électrique	Elektr. Sirene
	40	19 74 37 91	2	Megafono elettrosirena	Megaphone	Mégaphone	Megaphon
	41	98 05 43 22	2	Vite fiss. sirene	Screw	Vis	Schraube
	42	95 00 02 06	2	Ranella	Washer	Rondelle	Scheibe
	43	95 02 11 06	2	Ranella elastica	Spring washer	Rondelle élastique	Federscheibe
	44	92 60 22 06	2	Dado	Nut	Ecrou	Mutter
	45	19 73 25 00	2	Teleruttore sirene	Siren conn. switch	Télérupteur sirènes	Sirenfernschalter
	46	98 05 42 10	1	Vite	Screw	Vis	Schraube
	47	95 12 91 00	1	Ranella	Washer	Rondelle	Scheibe
	48	92 60 22 05	1	Dado	Nut	Ecrou	Mutter
	49	18 75 71 80	1	Cavo da fus. a teler.	Cable	Câble	Kabel
	50	14 75 06 51	1	Indicat. post. dx	R.H. rear indicator	Clignotant AR D	Hint. Blinker, R.
	51	14 75 06 50	1	Indicatore post. sx	L.H. rear indicator	Clignotant AR G	Hint. Blinker, L.

INDEX

BODY.....B9-B11
BUMPER GROUP.....B8

CLUTCH.....A5-A6
CLUTCH.....A13-A14
CONNECTING SYSTEM.A5 A6
CONTROLS.....B1 B19
COVERS.....A1-A2
CRANKCASE.....A1-A2
CYLINDER.....A3-A4
CYLINDER HEAD.....A3-A4

EXHAUST.....A8-A11
EXPORT VERSION
MODIFICATIONS.....D1-D2

FEEDING.....A8-A11
FORK.....B1
FRAME.....B5-B7
FRONT SUSPENSION..B12-B13
FRONT WHEEL.....B14

IGNITION.....C1-C4
INSTRUMENT PANEL..B18-B19

LIGHTING.....C5-C6
LUBRICATION.....A12

PEDAL.....B15-B17
PEDAL STARTER.....A15
POLICE VERSION....E1-E6

REAR SUSPENSION...B12-B13
REAR TRANSMISSION.B2-B4
REAR WHEEL.....B14

TIMING SYSTEM.....A7
TRANSMISSION.....A18-A20
TRANSMISSION CASE.A16-A17

E5 — VARIANTI POLIZIA — V35-V50

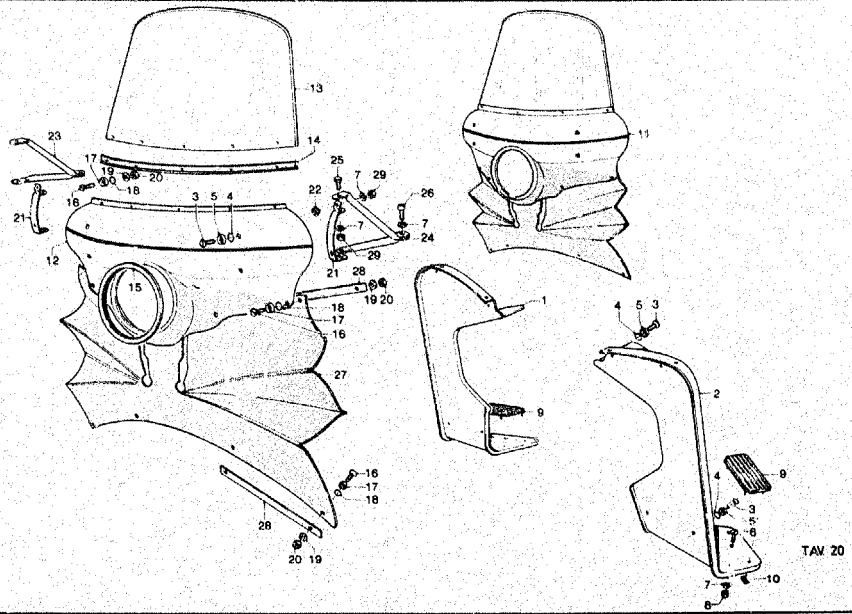

NOTE NOTES NOTES MARKE	POS. N.	N. COD. CODE No. No. CODE CODE Nr.	Q.tà Q.ty Q.té M.ge	DENOMINAZIONE	DESCRIPTION	DESIGNATION	BEZEICHNUNG

TAVOLA 20

1	19 45 33 90	1	Pedana paragambe dx	R.H. leg shield	Protection jambes D	Beinschutz, R.
2	19 45 61 90	1	Pedana paragambe sx	L.H. leg shield	Protection jambes G	Beinschutz, L.
3	98 26 06 21	12	Vite supp. fiss. pedana	Screw	Vis	Schraube
4	45 21 24 00	12	Anello gomma	Rubber ring	Anneau en caoutchouc	Gummiring
5	18 57 78 50	12	Ranella esterna	Washer	Rondelle	Scheibe
6	98 32 60 13	2	Vite inf. fiss. pedana	Screw	Vis	Schraube
7	95 02 11 06	12	Ranella elastica	Spring washer	Rondelle élastique	Federscheibe
8	92 60 22 06	2	Dado	Nut	Ecrou	Mutter
9	19 45 29 91	2	Tappetino	Rubber mat	Tapis	Teppich
10	39 92 22 00	8	Fermaglio tappetino	Clip	Etrier	Bügel
11	19 57 53 93	1	Carenatura con para-brezza (nera)	Fairing, compl. (black)	Carénage, compl. (noir)	Ausrundung, kpl. (schwarz)
11	19 57 53 97	1	Carenatura con para-brezza (bleu Roma)	Fairing, compl. (blue Roma)	Carénage, compl. (bleu Roma)	Ausrundung, kpl. (blau Roma)
12	19 57 54 93	1	Carenatura nuda (nero)	Fairing (black)	Carénage (noir)	Ausrundung (schwarz)
12	19 57 54 97	1	Caren. nuda (bleu Roma)	Fairing (blue Roma)	Carénage (bleu Roma)	Ausrundung (blau Roma)
13	19 57 72 90	1	Parabrezza nudo	Windshield	Pare-brise	Windschutzscheibe
14	19 57 79 90	1	Guarnizione	Gasket	Joint	Dichtung
15	19 57 89 90	1	Guarnizione faro	Gasket	Joint	Dichtung
16	98 26 04 18	13	Vite	Screw	Vis	Schraube
17	14 57 78 50	13	Ranella	Washer	Rondelle	Scheibe
18	90 70 60 35	13	Anello gomma	Rubber ring	Anneau en caoutch.	Gummiring
19	95 00 72 04	13	Ranella	Washer	Rondelle	Scheibe
20	92 60 10 04	13	Dado	Nut	Ecrou	Mutter
21	19 57 55 90	2	Cavallotto fiss. caren.	U-bolt	Etrier	Bügelschraube
22	93 11 00 60	4	Distanziale gomma	Rubber spacer	Entretoise en caoutch.	Gummiring
23	19 57 86 90	1	Supporto destro	R.H. support	Support D	Stütze, R.
24	19 57 86 91	1	Supporto sinistro	L.H. support	Support G	Stütze, L.
25	98 07 43 14	4	Vite fiss. supporto	Screw	Vis	Schraube
26	98 05 23 26	2	Vite fiss. supporto	Screw	Vis	Schraube
27	19 57 73 90	1	Grembiale per caren.	Apron	Tablier	Windschutz
28	19 57 75 90	4	Piastrina fiss. gremb.	Plate	Plaque	Platte
29	92 60 12 06	8	Dado	Nut	Ecrou	Mutter

INDEX

BODY.....B9-B11
BUMPER GROUP.....B8

CLUTCH.....A5-A6
CLUTCH.....A13-A14
CONNECTING SYSTEM.A5-A6
CONTROLS.....B15-B19
COVERS.....A1-A2
CRANKCASE.....A1-A2
CYLINDER.....A3-A4
CYLINDER HEAD.....A3-A4

EXHAUST.....A8-A11
EXPORT VERSION
MODIFICATIONS.....D1-D2

FEEDING.....A8-A11
FORK.....B1
FRAME.....B5-B7
FRONT SUSPENSION..B12-B13
FRONT WHEEL.....B14

IGNITION.....C1-C4
INSTRUMENT PANEL..B18-B19

LIGHTING.....C5-C6
LUBRICATION.....A12

PEDAL.....B15-B17
PEDAL STARTER.....A15
POLICE VERSION....E1-E6

REAR SUSPENSION...B12-B13
REAR TRANSMISSION.B2-B4
REAR WHEEL.....B14

TIMING SYSTEM.....A7
TRANSMISSION.....A18-A20
TRANSMISSION CASE.A16-A17

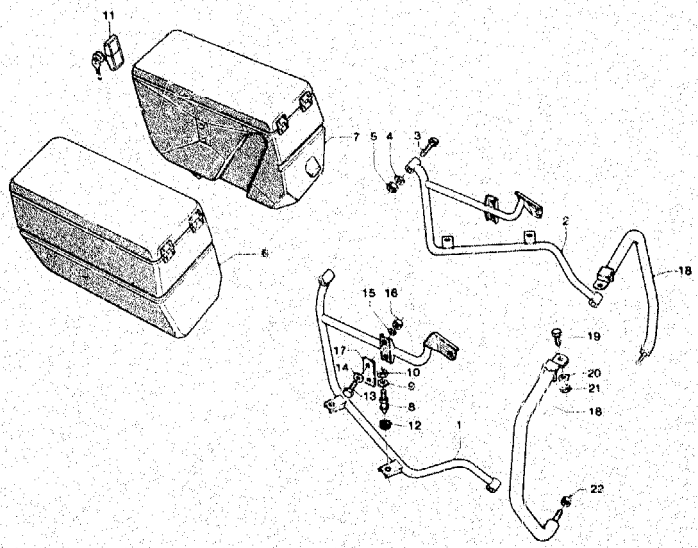

TAV. 21

NOTE NOTES NOTES MARKE	POS. N.	N° COD. CODE No. No. CODE CODE Nr	Q.tà Q.tv Q.té M.ge	DENOMINAZIONE	DESCRIPTION	DESIGNATION	BEZEICHNUNG
TAVOLA 21							
	1	19 48 50 90	1	Portaborse dx compl.	R.H. bag holder	Porte-sac D	Taschetrager, R.
	2	19 48 65 90	1	Portaborse sx compl.	L.H. bag holder	Porte-sac G	Taschetrager, L.
	3	98 05 25 55	2	Vite fiss. portaborse	Screw	Vis	Schraube
	4	95 02 11 10	2	Ranella per vite	Washer	Rondelle	Scheibe
	5	92 60 22 10	2	Dado per vite	Nut	Ecrou	Mutter
	6	19 48 25 93	1	Borsa later. dx (nera)	R.H. side bag (black)	Sac D (noir)	Tasche, R. (schwarz)
	6	19 48 25 97	1	Borsa lat. dx (blu Roma)	R.H. side bag (blue Roma)	Sac D (bleu Roma)	Tasche, R. (blau Roma)
	7	19 48 57 93	1	Borsa later. sx (nera)	L.H. side bag (black)	Sac G (noir)	Tasche, L. (schwarz)
	7	19 48 57 97	1	Borsa lat. sx (blu Roma)	L.H. side bag (blue Roma)	Sac G (bleu Roma)	Tasche, L. (blau Rome)
	8	19 48 69 90	4	Colonn. fiss. borse	Stud bolt	Goujon	Stiftschraube
	9	95 10 01 41	4	Ranella piana	Washer	Rondelle	Scheibe
	10	92 60 22 06	4	Dado	Nut	Ecrou	Mutter
	11	19 48 40 90	2	Serratura per borsa d/s con chiavi	R.H. & L.H. bag lock with keys	Serrure pour sac D/G avec clés	Tasche R. u. L. Schloss mit Schlussel
	12	91 55 10 82	4	Gommino inferiore	Rubber	Caoutchouc	Gummistück
	13	98 05 43 20	4	Vite fiss. borse	Screw	Vis	Schraube
	14	95 10 01 41	4	Ranella piana	Washer	Rondelle	Scheibe
	15	95 02 11 06	4	Ranella elastica	Spring washer	Rondelle élastique	Federscheibe
	16	92 60 22 06	4	Dado	Nut	Ecrou	Mutter
	17	10 48 82 00	4	Spessore gomma	Rubber spacer	Entretoise caoutch.	Gummidistanzstück
	18	19 45 82 90	2	Paraurti poster	Rear bar	Pare-choc AR	Hint. Stossstange
	19	98 05 44 20	2	Vite sup. fiss. paraurti	Screw	Vis	Schraube
	20	95 00 42 08	2	Ranella per vite	Washer	Rondelle	Scheibe
	21	92 60 22 08	2	Dado per vite	Nut	Ecrou	Mutter
	22	92 63 05 10	2	Dado inferiore	Nut	Ecrou	Mutter

INDEX

BODY.....B9-B11
BUMPER GROUP.....B8

CLUTCH.....A5-A6
CLUTCH.....A13-A14
CONNECTING SYSTEM.A5-A6
CONTROLS.....B15-B19
COVERS.....A1-A2
CRANKCASE.....A1-A2
CYLINDER.....A3-A4
CYLINDER HEAD.....A3-A4

EXHAUST.....A8-A11
EXPORT VERSION
MODIFICATIONS.....D1-D2

FEEDING.....A8-A11
FORK.....B1
FRAME.....B5-B7
FRONT SUSPENSION..B12-B13
FRONT WHEEL.....B14

IGNITION.....C1-C4
INSTRUMENT PANEL..B18-B19

LIGHTING.....C5-C6
LUBRICATION.....A12

PEDAL.....B15-B17
PEDAL STARTER.....A15
POLICE VERSION....E1-E6

REAR SUSPENSION...B12-B13
REAR TRANSMISSION.B2-B4
REAR WHEEL.....B14

TIMING SYSTEM.....A7
TRANSMISSION.....A18-A20
TRANSMISSION CASE.A16-A17



V 35 C - V 50 C 350 1982-1986	GU067	00	TAB N.	01
ACCESSORIES				

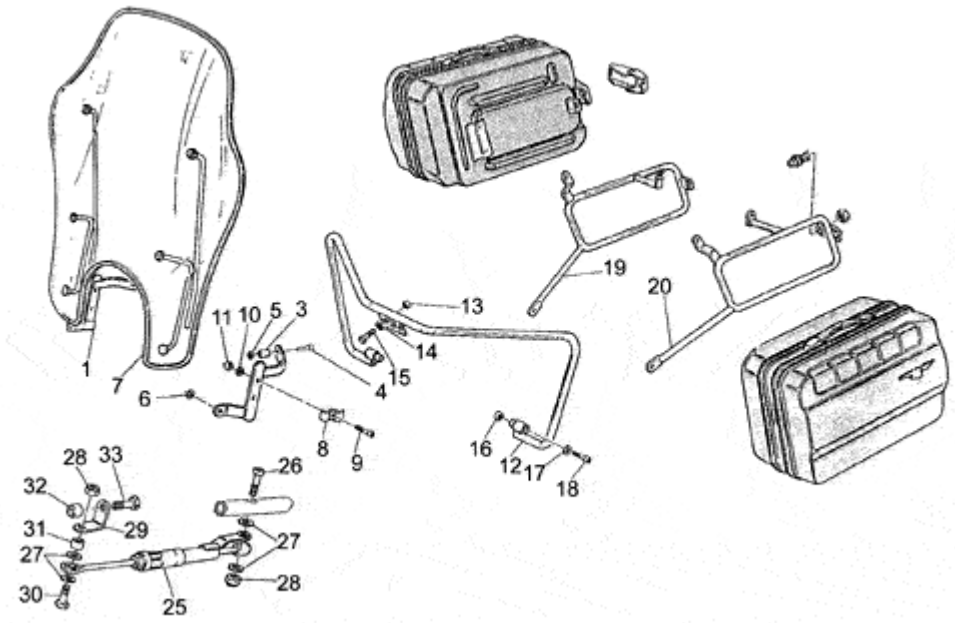

Pos.	Description	Year	I_M_	Country	Version	Code	Q.ty	P.Cod.
1	RH clamp	-	-	-	- -	GU23506860	1	
3	Spacer	-	-	-	- -	GU91181112	2	
4	Screw	-	-	-	- -	GU98620555	2	
5	Washer 10,2x18x2	-	-	-	- -	GU95004210	2	
6	Washer	-	-	-	- -	GU95100317	2	
7	Windscreen	-	-	-	- -	GU23577260	1	
8	Clamp	-	-	-	- -	GU18578451	4	
9	Screw	-	-	-	- -	GU98074425	4	
10	Spring washer	-	-	-	- -	GU95021108	4	
11	Nut	-	-	-	- -	GU92601208	4	
12	Front bumper	-	-	-	- -	GU23450261	1	
13	Nut	-	-	-	- -	GU92601208	2	
14	Washer	-	-	-	- -	GU95004208	2	
15	Screw	-	-	-	- -	GU98822416	2	
16	Nut	-	-	-	- -	GU92602210	2	
17	Washer	-	-	-	- -	GU95120105	4	
18	Screw	-	-	-	- -	GU98620545	2	
19	RH support	-	-	-	- -	GU23485080	1	
20	LH support	-	-	-	- -	GU23486580	1	
25	Steering shock absorber	-	-	-	- -	GU17530260	1	
26	Screw M6X45	-	-	-	- -	GU98620345	1	
27	Washer	-	-	-	- -	GU95000206	4	
28	Nut M6x1	-	-	-	- -	GU92630106	2	
29	Clamp	-	-	-	- -	GU23531860	1	
30	Screw	-	-	-	- -	GU98620340	1	
31	Spacer	-	-	-	- -	GU91180618	1	
32	Spacer	-	-	-	- -	GU91181016	1	
33	Screw	-	-	-	- -	GU98072570	1	

V 35 C - V 50 C 350 1982-1986	GU067	00	TAB N.	02
BODY				

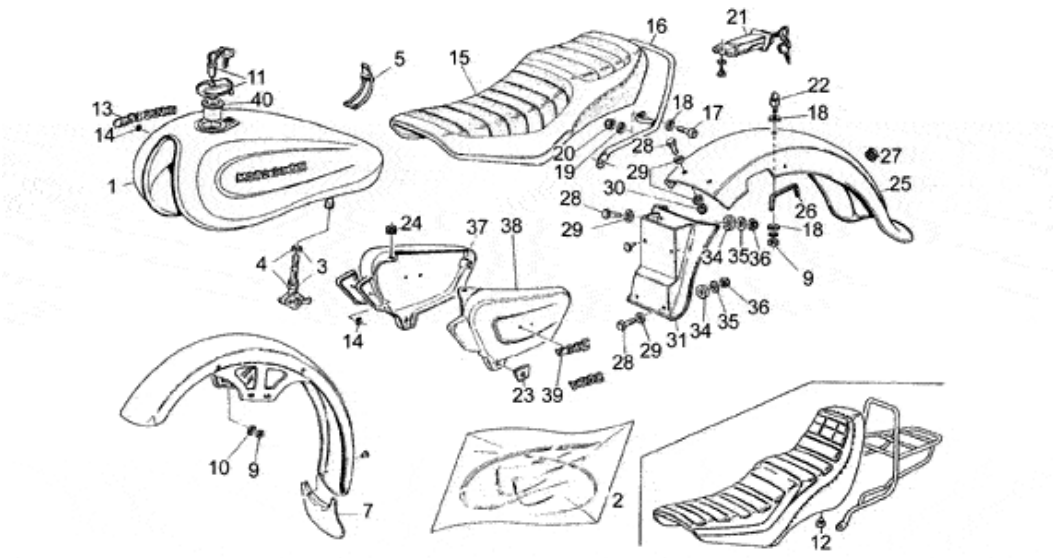

Pos.	Description	Year	I_M_	Country	Version		Code	Q.ty	P.Cod.
1	Fuel tank	-	-	-	-	-	GU231002801	1	
2	Decal set	-	-	-	D2	-	GU23923380	1	
	Decal set	-	-	-	D1	-	GU23923381	1	
	Decal set	-	-	-	D3	-	GU23923382	1	
3	RH fuel cock	-	-	-	-	-	GU65105400	1	
4	LH fuel cock	-	-	-	-	-	GU65105401	1	
5	Tie rod	-	-	-	-	-	GU19102750	1	
7	Splash guard	-	-	-	-	-	GU27436920	1	
9	Nut M8X1,25	-	-	-	-	-	GU92602208	5	
10	Spring washer 8x15x0,3	-	-	-	-	-	GU61270300	4	
11	Fuel filler cap	-	-	-	-	-	GU30103960	1	
12	Drift	-	-	-	2a	-	GU23461680	4	
13	Decal "Moto Guzzi"	-	-	-	-	-	GU14917300	2	
14	Clip	-	-	-	-	-	GU14105100	6	
15	Saddle	-	-	-	1a	-	GU23460580	1	
16	Passenger handle	-	-	-	1a	-	GU23464380	1	
17	Screw	-	-	-	-	-	GU98822420	2	
18	Washer	-	-	-	-	-	GU95000208	4	
19	Spring washer 8x15x0,3	-	-	-	-	-	GU61270300	2	
20	Nut	-	-	-	-	-	GU92630508	2	
21	Saddle lock	-	-	-	-	-	GU23468780	1	
22	Seat lock pin	-	-	-	-	-	GU23462980	1	
23	Rubber spacer	-	-	-	-	-	GU19478550	2	
24	Rubber spacer	-	-	-	-	-	GU91551085	2	
25	Rear mudguard	-	-	-	-	-	GU23437080	1	
26	Gasket	-	-	-	-	-	GU23438980	2	
27	Fairlead	-	-	-	-	-	GU91551102	1	
28	Hex screw M6X20	-	-	-	-	-	GU98054320	6	
29	Washer	-	-	-	-	-	GU95000206	8	
30	Nut	-	-	-	-	-	GU92602206	2	
31	Splash guard	-	-	-	-	-	GU23438780	1	
34	Rubber spacer	-	-	-	-	-	GU93110060	4	
35	Washer 6,4x12x1,2	-	-	-	-	-	GU95100141	4	
36	Nut M6x1	-	-	-	-	-	GU92630106	4	
37	RH side panel	-	-	-	-	gz	GU234760801	1	
38	LH side panel	-	-	-	-	gz	GU234761801	1	
39	Name plate "V35C"	-	-	-	-	-	GU23922020	2	
40	Filler cap	-	-	-	-	-	GU62100600	1	

MOTO GUZZI	V 35 C - V 50 C 350 1982-1986	GU067	00	TAB N.	03

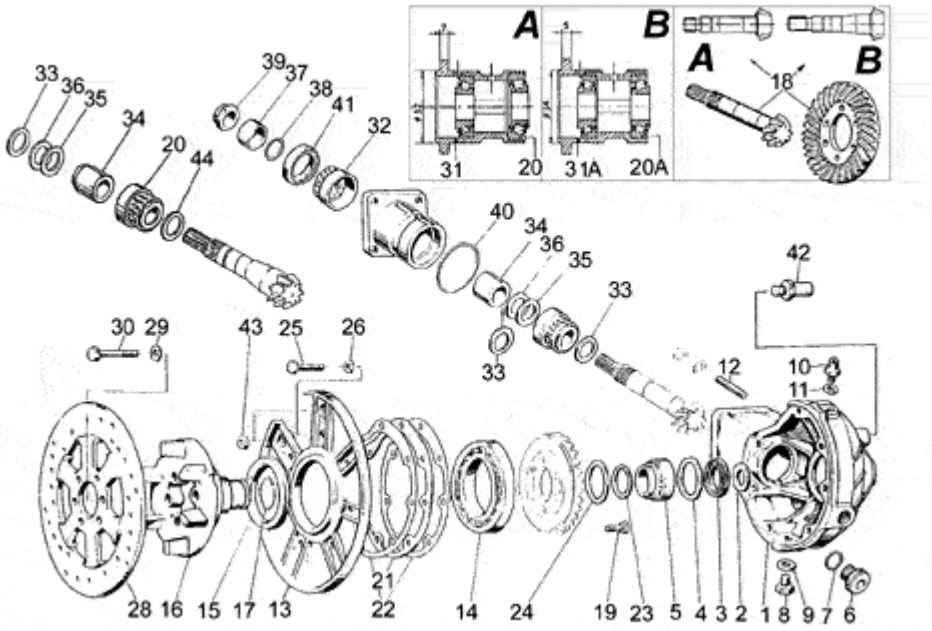

Pos.	Description	Year	I_M_	Country	Version		Code	Q.ty	P.Cod.
1	Transmission housinggrey	-	-	-	-	-	GU31350380	1	
2	Clearance washer	-	-	-	-	-	GU19351900	1	
3	Gasket ring 35x47x7	-	-	-	-	-	GU90403547	1	
4	Clearance washer	-	-	-	-	-	GU19351100	1	
5	Roller bearing 35x50x17	-	-	-	-	-	GU92252235	1	
6	Oil plug	-	-	-	-	-	GU12022600	1	
7	O-ring 20,24X2,62	-	-	-	-	-	GU90706203	1	
8	Oil level plug	-	-	-	-	-	GU95980214	1	
9	Gasket	-	-	-	-	-	GU10528900	1	
10	Breather plug	-	-	-	-	-	GU19206501	1	
11	Gasket	-	-	-	-	-	GU10528900	1	
12	Stud bolt 8x46	-	-	-	T2-V50C	-	GU96508045	4	
	Stud bolt	-	-	-	T3-V35C	-	GU96508055	4	
	Stud bolt	-	-	-	T4-V50C	-	GU96508055	4	
	Stud bolt 8x46	-	-	-	T1-V35C	-	GU96508045	4	
13	Cover	-	-	-	-	-	GU19350421	1	
14	Ball bearing 70x110x13	-	-	-	-	-	GU92201070	1	
15	Gasket ring 75x90x8	-	-	-	-	-	GU90407590	1	
16	Pin	-	-	-	-	-	GU19351401	1	
17	Stop ring	-	-	-	-	-	GU90353030	1	
18	Bevel gear Z=8/31	-	-	-	-	-	GU20354621	1	
19	Screw	-	-	-	-	-	GU19356320	6	
20	Tap.roller bearing	-	-	-	T1-V35C	-	GU92249225	1	
	Roller bearing 20x47x14	-	-	-	T3-V35C	-	GU92249220	1	
	Roller bearing 20x47x14	-	-	-	T4-V50C	-	GU92249220	1	
	Tap.roller bearing	-	-	-	T2-V50C	-	GU92249221	1	
	Tap.roller bearing	-	-	-	T1-V35C	-	GU92249221	1	
	Tap.roller bearing	-	-	-	T3-V35C	-	GU92249223	1	
	Tap.roller bearing	-	-	-	T4-V50C	-	GU92249223	1	
	Tap.roller bearing	-	-	-	T2-V50C	-	GU92249225	1	
21	Spacer 1,6 mm	-	-	-	-	-	GU19355413	1	
	Spacer 1,5 mm	-	-	-	-	-	GU19355412	1	
	Spacer 1,4 mm	-	-	-	-	-	GU19355411	1	

	Spacer 1,3 mm	-	-	-	-	-	GU19355410	1
	Spacer 1,2 mm	-	-	-	-	-	GU19355408	1
	Spacer 1,1 mm	-	-	-	-	-	GU19355406	1
	Spacer 1 mm	-	-	-	-	-	GU19355404	1
	Spacer 0,8 mm	-	-	-	-	-	GU19355400	1
	Spacer 0,9 mm	-	-	-	-	-	GU19355402	1
22	Gasket	-	-	-	-	-	GU19350700	2
23	Thrust washer	-	-	-	-	-	GU19352300	1
24	Thrust washer	-	-	-	-	-	GU19353500	1
25	Screw M8X25	-	-	-	-	-	GU19357660	7
26	Spring washer 8x15x0,3	-	-	-	-	-	GU61270300	7
28	Rear brake disc	-	-	-	-	-	GU19635736	1
29	Washer 8,4X13X0,8	-	-	-	-	-	GU14615901	6
30	Screw	-	-	-	-	-	GU98054418	6
31	Bearing casing	-	-	-	T3-V35C	-	GU19352460	1
	Bearing casing	-	-	-	T1-V35C	-	GU19352401	1
	Bearing casing	-	-	-	T2-V50C	-	GU19352401	1
	Bearing casing	-	-	-	T4-V50C	-	GU19352460	1
32	Roller bearing 20x47x14	-	-	-	-	-	GU92249220	1
33	Spacer 1,9 mm	-	-	-	-	-	GU19355309	4
	Spacer 1,1 mm	-	-	-	-	-	GU19355301	4
	Spacer 1,2 mm	-	-	-	-	-	GU19355302	4
	Spacer 1,3 mm	-	-	-	-	-	GU19355303	4
	Spacer 1,4 mm	-	-	-	-	-	GU19355304	4
	Spacer 1,5 mm	-	-	-	-	-	GU19355305	4
	Spacer 1,6 mm	-	-	-	-	-	GU19355306	4
	Spacer 1,7 mm	-	-	-	-	-	GU19355307	4
	Spacer 1,8 mm	-	-	-	-	-	GU19355308	4
	Spacer 1 mm	-	-	-	-	-	GU19355300	4
34	Spacer	-	-	-	B	-	GU19355121	1
	Spacer	-	-	-	A	-	GU19355100	1
35	Shim 0,1 mm	-	-	-	-	-	GU19355200	2
36	Shim 0,15 mm	-	-	-	-	-	GU19355202	11
37	Spacer	-	-	-	-	-	GU19356801	1
38	Gasket ring 18,77X1,78	-	-	-	-	-	GU90706188	1
39	Nut	-	-	-	-	-	GU19356700	1
40	Gasket ring	-	-	-	-	-	GU90706552	1
41	Gasket ring	-	-	-	-	-	GU90403247	1
42	Pin	-	-	-	-	-	GU23555281	1
43	Nut M8X1,25	-	-	-	-	-	GU92602208	2
44	Spacer 1,9 mm	-	-	-	-	-	GU19355329	2
	Spacer 1,1 mm	-	-	-	-	-	GU19355321	2
	Spacer 1,2 mm	-	-	-	-	-	GU19355322	2
	Spacer 1,3 mm	-	-	-	-	-	GU19355323	2
	Spacer 1,4 mm	-	-	-	-	-	GU19355324	2
	Spacer 1,5 mm	-	-	-	-	-	GU19355325	2
	Spacer 1,6 mm	-	-	-	-	-	GU19355326	2
	Spacer 1,7 mm	-	-	-	-	-	GU19355327	2
	Spacer 1,8 mm	-	-	-	-	-	GU19355328	2
	Spacer 1 mm	-	-	-	-	-	GU19355320	2

MOTO GUZZI	V 35 C - V 50 C 350 1982-1986	GU067	00	TAB N.	04

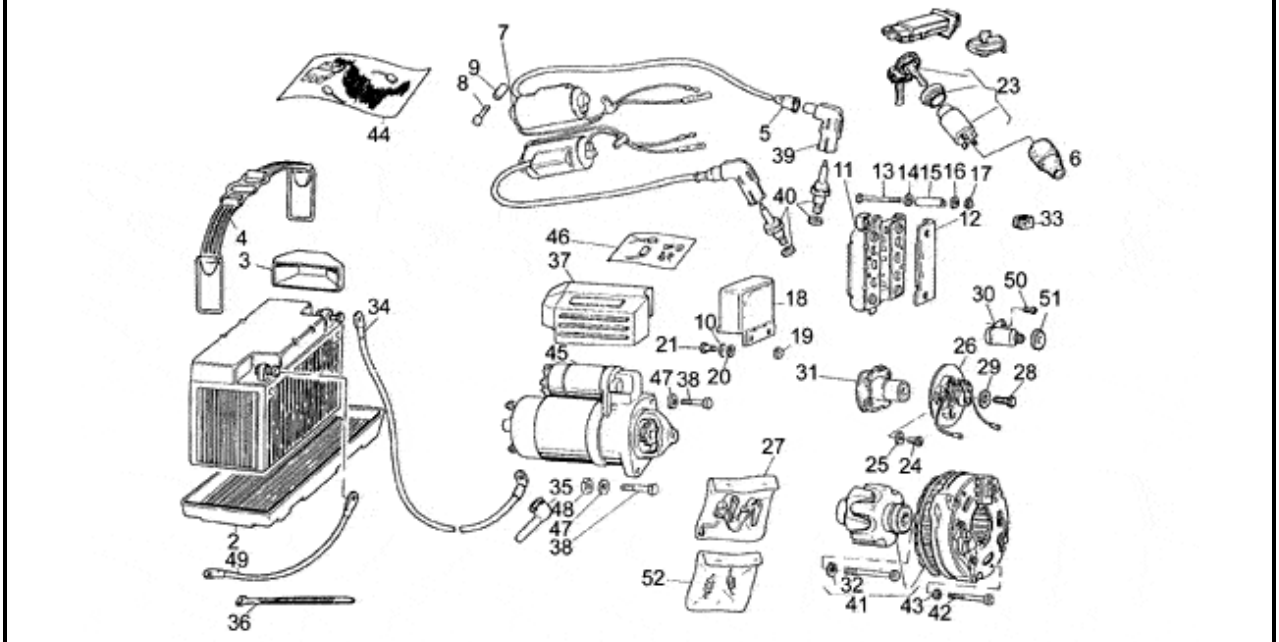

Pos.	Description	Year	I_M_	Country	Version		Code	Q.ty	P.Cod.
2	Float chamber	-	-	-	-	-	GU14707000	1	
3	Accumulator fixing wedge	-	-	-	-	-	GU14705350	1	
4	Clamp	-	-	-	-	-	GU19704800	1	
5	Cap	-	-	-	-	-	GU14717600	2	
6	Ring nut	-	-	-	-	-	GU19741336	1	
7	HT coil	-	-	-	-	-	GU31716560	2	
8	Hex socket screw M5X45	-	-	-	-	-	GU98620245	4	
9	Spacer	-	-	-	-	-	GU91180721	4	
10	Washer	-	-	-	-	-	GU95000206	2	
11	Bosch rectifier	-	-	-	-	-	GU17704300	1	
12	Cover	-	-	-	-	-	GU61704200	1	
13	Screw	-	-	-	-	-	GU98052245	4	
14	Washer 6,4x12x1,2	-	-	-	-	-	GU95100141	2	
15	Spacer	-	-	-	-	-	GU91180627	4	
16	Spring washer 5,3X10X0,5	-	-	-	-	-	GU95129100	4	
17	Nut	-	-	-	-	-	GU92602205	4	
18	Voltage regulator BOSCH	-	-	-	-	-	GU29703800	1	
19	Nut	-	-	-	-	-	GU92602206	2	
20	Special washer	-	-	-	-	-	GU61013800	2	
21	Screw	-	-	-	-	-	GU98054312	2	
23	Main switch	-	-	-	-	-	GU31735360	1	
24	Screw	-	-	-	-	-	GU98290512	2	
25	Washer	-	-	-	-	-	GU95000205	2	
26	Plate	-	-	-	00399N	-	GU27708520001	1	
27	Contact rev. kit	-	-	-	-	-	GU19709620	1	
28	Screw	-	-	-	-	-	GU98054314	1	
29	Washer 6.3X17X1.5	-	-	-	-	-	GU95100126	1	
30	Capacitor	-	-	-	-	-	GU19708620	2	
31	Spark advance	-	-	-	-	-	GU19708480	1	
32	Screw	-	-	-	-	-	GU14712459	1	
33	Rubber spacer	-	-	-	-	-	GU19007700	1	
34	Wire	-	-	-	-	-	GU19748000	1	
35	Cap	-	-	-	-	-	GU19707100	2	
36	Hose clamp 3,6x20,6	-	-	-	-	-	GU14609650	20	

37	Protection	-	-	-	-	-	GU19733350	1
38	Hex screw M8X35	-	-	-	-	-	GU98052435	2
39	Sparkplug cap	-	-	-	-	-	GU14717400	2
40	Spark plug NGK BP6ES	-	-	-	-	-	GU30717010	2
41	Bosch alternator	-	-	-	-	-	GU17712400	1
42	Hex socket screw M5X45	-	-	-	-	-	GU98620245	3
43	Notched washer	-	-	-	-	-	GU95021105	3
44	Repairing kit	-	-	-	-	-	GU17712454	1
45	Starter motor Valeo	-	-	-	-	-	GU30730711	1
46	Starter motor revision kit	-	-	-	B	-	GU14730570	1
47	Washer	-	-	-	-	-	GU95004208	2
48	Nut M8X1,25	-	-	-	-	-	GU92602208	1
49	Ground-battery lead	-	-	-	-	-	GU19748400	1
50	Screw	-	-	-	-	-	GU98200408	2
51	Cap	-	-	-	-	-	GU19708720	2
52	Spring kit	-	-	-	-	-	GU19719820	1

V 35 C - V 50 C 350 1982-1986	GU067	00	TAB N.	05
LIGHTS				

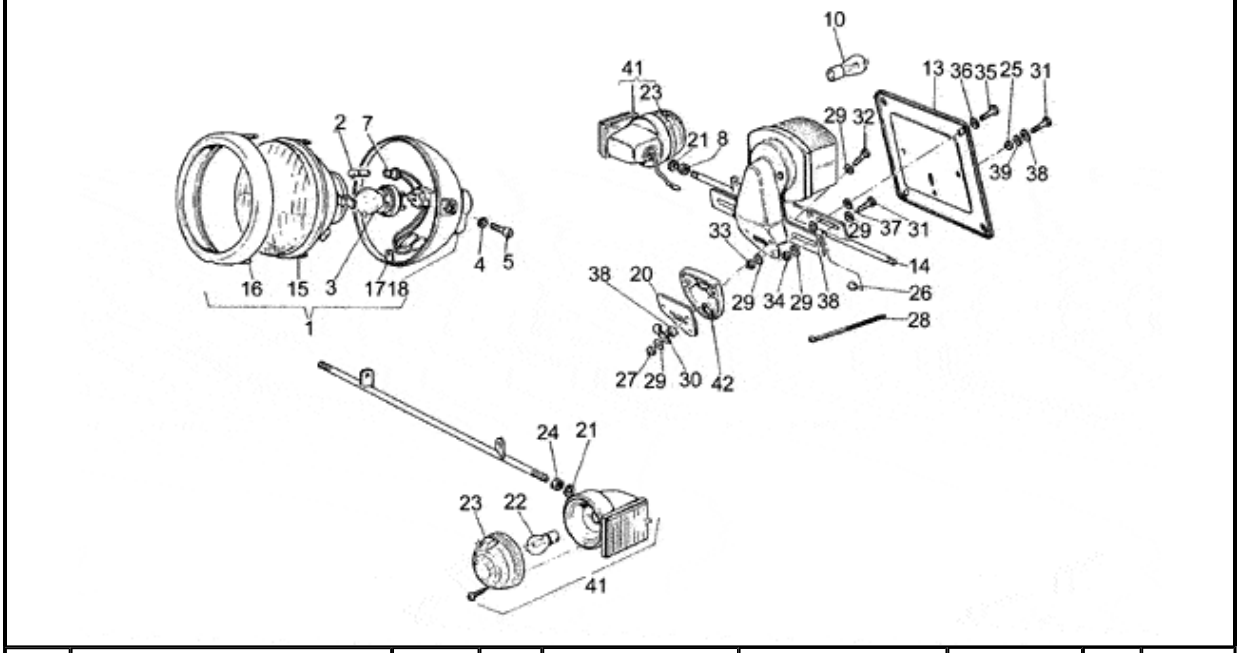

Pos.	Description	Year	I_M_	Country	Version	Code	Q.ty	P.Cod.
1	Headlight	-	-	-	- -	GU28740533	1	
2	Lamp 12V-4W	-	-	-	- -	GU93450119	1	
3	Lamp 12V 45/40W	-	-	-	- -	GU93450231	1	
4	Washer	-	-	-	- -	GU95020111	2	
5	Screw	-	-	-	- -	GU98822520	2	
7	Lampholder	-	-	-	- -	GU17740405	1	
8	Nut	-	-	-	- -	GU19742050	2	
10	Lamp 12V/5-21W	-	-	-	- -	GU93450224	1	
13	Plate holder support	-	-	-	- -	GU10474600	1	
14	Support	-	-	-	- -	GU18753501	1	
15	Optical group	-	-	-	- -	GU19740455	1	
16	Light frame	-	-	-	- -	GU19740454	1	
17	Cap	-	-	-	- -	GU19740458	1	
18	Rear cap plug	-	-	-	- -	GU19740404	1	
20	Rubber protection	-	-	-	- -	GU10475900	1	
21	Washer 10,5X21X1	-	-	-	- -	GU14018400	4	
22	Lamp 12V-10W	-	-	-	- -	GU93450129	4	
23	Turn indicator lens	-	-	-	- -	GU14753750	4	
24	Nut	-	-	-	- -	GU92602411	2	
25	Nut M6x1	-	-	-	- -	GU92630106	1	
26	Plug	-	-	-	- -	GU93180110	2	
27	Nut M6x1	-	-	-	- -	GU92630106	3	
28	Hose clamp 3,6x20,6	-	-	-	- -	GU14609650	10	
29	Washer	-	-	-	- -	GU95000206	6	
30	U-bolt	-	-	-	- -	GU93301315	2	
31	Hex screw M6X16	-	-	-	- -	GU98054316	3	
32	Screw	-	-	-	- -	GU98054325	3	
33	Nut	-	-	-	- -	GU92630105	2	
34	Nut	-	-	-	- -	GU92602206	2	
35	Screw	-	-	-	- -	GU98054220	2	
36	Washer	-	-	-	- -	GU95000205	2	
37	Washer 5,25x14x1,5	-	-	-	- -	GU95100059	4	
38	Rubber spacer	-	-	-	- -	GU93110060	9	
39	Washer 6,4x12x1,2	-	-	-	- -	GU95100141	2	
41	Front turn indicator	-	-	-	- -	GU23750680	1	
42	Spacer	-	-	-	- -	GU23474580	1	

MOTO GUZZI	V 35 C - V 50 C 350 1982-1986	GU067	00	TAB N.	06

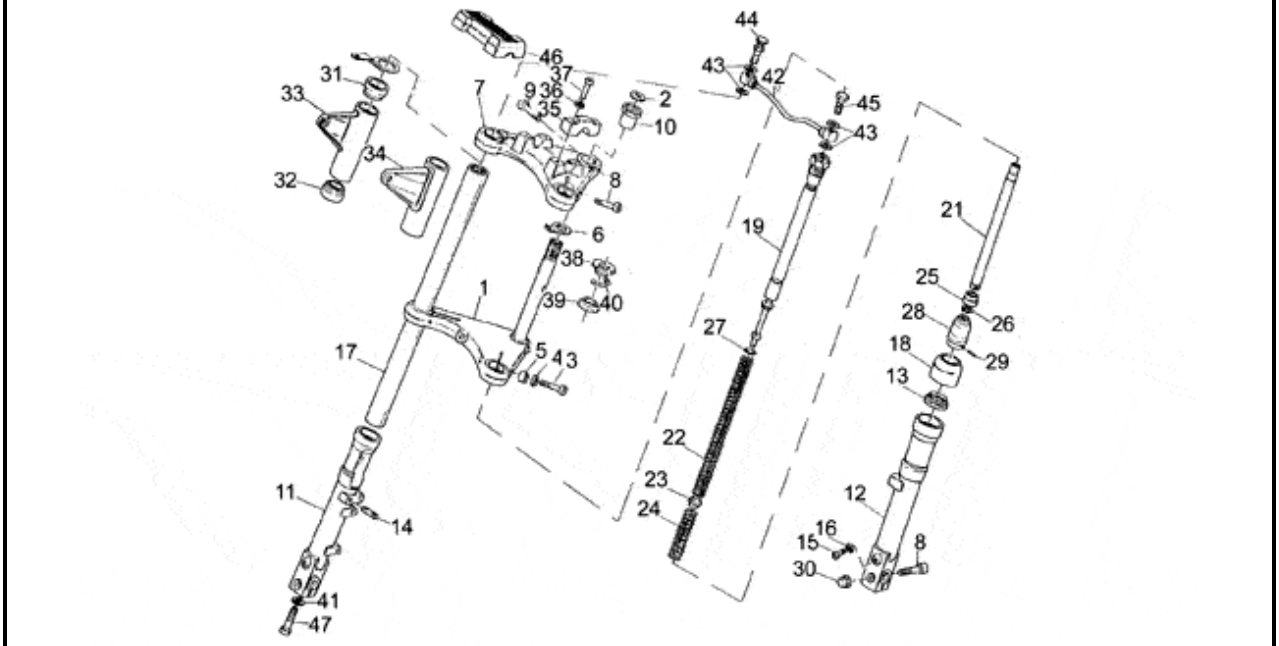

Pos.	Description	Year	I_M_	Country	Version		Code	Q.ty	P.Cod.
1	Lower plate	-	-	-	-	-	GU62494021	1	
2	Plug	-	-	-	-	-	GU17517700	1	
3	Hex screw M10X55	-	-	-	-	-	GU98072555	2	
4	Washer	-	-	-	-	-	GU95007210	2	
5	Spacer	-	-	-	-	-	GU91181016	2	
6	Washer	-	-	-	-	-	GU62493200	1	
7	Upper plate	-	-	-	-	-	GU27493135	1	
8	Screw M10X40	-	-	-	-	-	GU98620540	2	
9	Screw	-	-	-	-	-	GU98622535	1	
10	Bush	-	-	-	-	-	GU14516600	1	
11	RH sleeve	-	-	-	-	-	GU625225201	1	
	RH sleeve	-	-	-	T5-V35C	-	GU23522520	1	
12	LH sleeve	-	-	-	T5-V35C	-	GU23522620	1	
	LH sleeve	-	-	-	-	-	GU625226201	1	
13	Oil seal	-	-	-	-	-	GU90403449	2	
14	Stud bolt	-	-	-	-	-	GU96508021	4	
15	Screw	-	-	-	-	-	GU98622312	2	
16	Washer 6,25x10x1,5	-	-	-	-	-	GU95100116	2	
17	Sleeve	-	-	-	-	-	GU62525421	2	
18	Dust cover	-	-	-	-	-	GU14524500	2	
19	Shock absorber	-	-	-	-	-	GU19526460	2	
21	Pipe	-	-	-	-	-	GU14527800	2	
22	Spring	-	-	-	-	-	GU19526960	2	
23	Spacer	-	-	-	-	-	GU18527960	2	
24	Return spring	-	-	-	-	-	GU18526660	2	
25	Fork pump ring	-	-	-	-	-	GU14527900	2	
26	Circlip	-	-	-	-	-	GU90271014	2	
27	Gasket ring	-	-	-	-	-	GU90706266	2	
28	Cup	-	-	-	-	-	GU19527460	2	
29	Dowel	-	-	-	-	-	GU95510308	2	
30	Nut	-	-	-	-	-	GU92781100	2	
31	Ring	-	-	-	-	-	GU17492700	4	
32	Ring	-	-	-	-	-	GU93110352	2	
33	RH headlight supp.	-	-	-	-	-	GU62496121	1	

34	LH headlight supp.	-	-	-	-	-	GU62496221	1
35	Handlebar collar	-	-	-	-	-	GU17500200	2
36	Washer	-	-	-	-	-	GU95004208	4
37	Screw M8X35	-	-	-	-	-	GU98620435	4
38	Plug	-	-	-	-	-	GU61514940	1
39	Steering race	-	-	-	00201N	-	GU61515240	1
40	Ball	-	-	-	-	-	GU92295704	44
41	Gasket	-	-	-	-	-	GU10528900	2
42	Front shock absorber tube	-	-	-	-	-	GU19529660	1
43	Copper washer	-	-	-	-	-	GU28556350	4
44	Air valve	-	-	-	-	-	GU28556250	1
45	Bored screw	-	-	-	-	-	GU28556450	1
46	Cover	-	-	-	-	-	GU63500520001	1
47	Hex socket screw M10x60	-	-	-	-	-	GU98620560	2

V 35 C - V 50 C 350 1982-1986	GU067	00	TAB N.	07
SWING ARM				

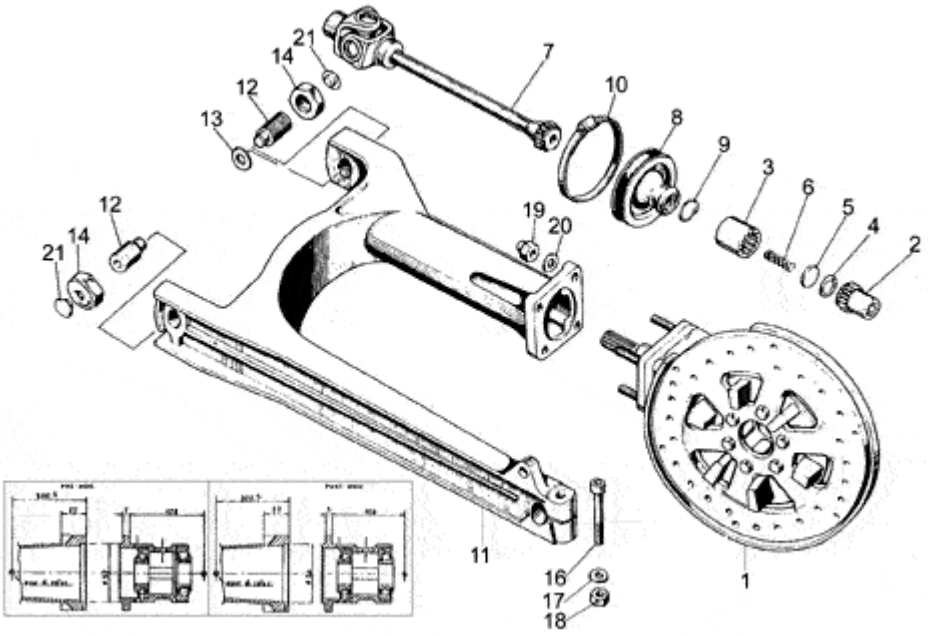

Pos.	Description	Year	I_M_	Country	Version		Code	Q.ty	P.Cod.
1	Transmission box assy., grey	-	-	-	-	-	GU20350220	1	
2	Hose	-	-	-	-	-	GU19327701	1	
3	Hose	-	-	-	-	-	GU19328801	1	
4	Circlip	-	-	-	-	-	GU90272023	1	
5	Disc	-	-	-	-	-	GU19327601	1	
6	Spring	-	-	-	-	-	GU94321099	1	
7	Coupling	-	-	-	-	-	GU23328081	1	
8	Protection collar	-	-	-	-	-	GU23548080	1	
9	Spring	-	-	-	-	-	GU23548180	1	
10	Hose clamp	-	-	-	-	-	GU93305074	1	
11	Rear fork grey	-	-	-	T4-V50C	-	GU31540281	1	
	Rear fork grey	-	-	-	T3-V35C	-	GU31540281	1	
12	Pin	-	-	-	-	-	GU19547000	2	
13	Spacer	-	-	-	-	-	GU35214300	1	
14	Nut	-	-	-	-	-	GU14547800	2	
16	Screw	-	-	-	-	-	GU98820545	1	
17	Washer 10,2x18x2	-	-	-	-	-	GU95004210	1	
18	Nut	-	-	-	-	-	GU92602210	1	
19	Nut	-	-	-	-	-	GU92781081	4	
20	Washer 8,4X13X0,8	-	-	-	-	-	GU14615901	4	
21	Plug	-	-	-	-	-	GU93180105	2	

Revente Interdite - Revendita Vietata - Resaling Forbiden - Wiederverkauf Verboten

V 35 C - V 50 C 350 1982-1986	GU067	00	TAB N.	08
ELECTRICAL SYSTEM				

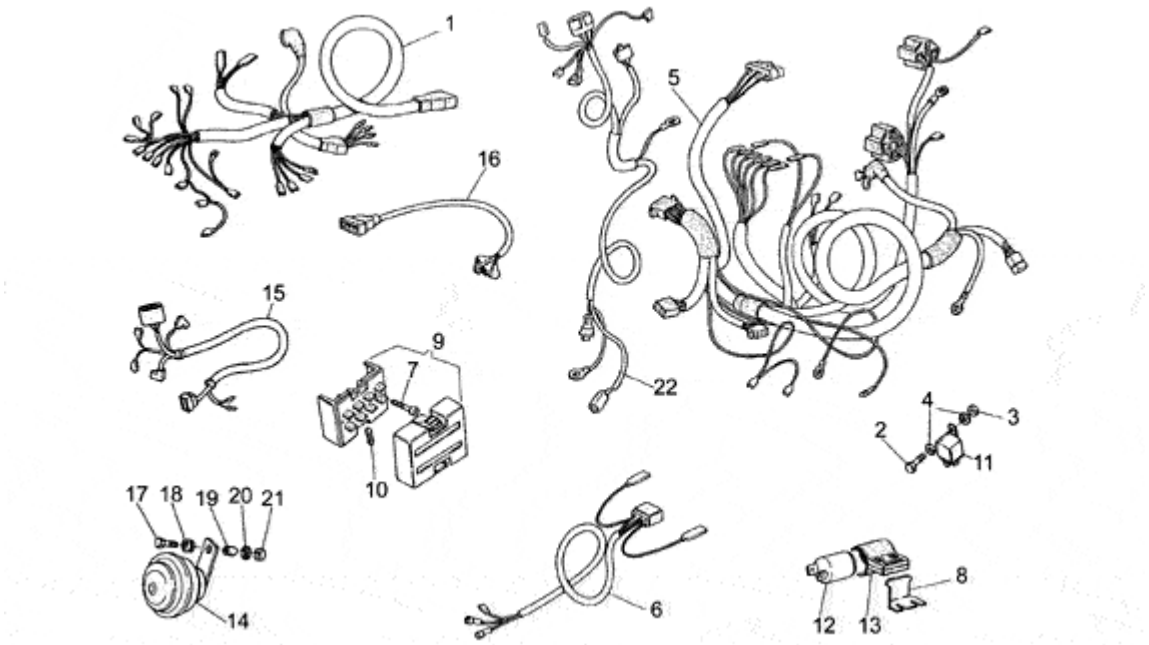

Pos.	Description	Year	I_M_	Country	Version	Code	Q.ty	P.Cod.
1	Instrum.board cable kit	-	-	-	- -	GU19747281	1	
2	Screw	-	-	-	- -	GU98054212	2	
3	Nut	-	-	-	- -	GU92602205	2	
4	Washer 5,25x14x1,5	-	-	-	- -	GU95100059	4	
5	Electrical system	-	-	-	- -	GU19747120	1	
6	Taillight wiring harn.	-	-	-	- -	GU23747380	1	
7	Screw	-	-	-	- -	GU98622220	2	
8	Plate	-	-	-	- -	GU19750435	1	
9	Fuse holder box	-	-	-	- -	GU19743000	1	
10	Fuse 16A	-	-	-	- -	GU17742550	4	
11	Starter relay	-	-	-	- -	GU19732500	2	
12	Flasher unit	-	-	-	- -	GU17750520	1	
13	Block	-	-	-	- -	GU17751200	1	
14	Horn	-	-	-	- -	GU61743700	1	
15	Wiring	-	-	-	- -	GU19726380	1	
16	Wire	-	-	-	- -	GU19747105	1	
17	Screw	-	-	-	- -	GU98822440	1	
18	Washer	-	-	-	- -	GU95000208	1	
19	Spacer	-	-	-	- -	GU91181016	1	
20	Spring washer	-	-	-	- -	GU95021108	1	
21	Nut M8X1,25	-	-	-	- -	GU92602208	1	
22	Alternator-regulator wiring	-	-	-	- -	GU19725820	1	

V 35 C - V 50 C 350 1982-1986	GU067	00	TAB N.	09
RH FRONT BRAKE SYSTEM				

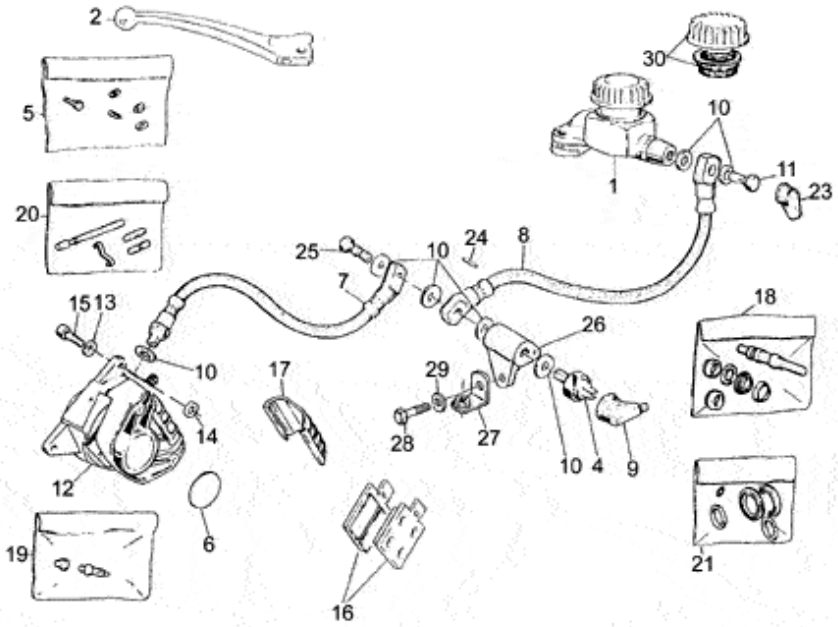

Pos.	Description	Year	I_M_	Country	Version		Code	Q.ty	P.Cod.
1	Front master cilinder	-	-	-	-	-	GU28660178	1	
2	Front brake lever	-	-	-	-	-	GU14605650	1	
4	Brake light switch	-	-	-	-	-	GU25657001	1	
5	Lever overhaul kit	-	-	-	-	-	GU17659450	1	
6	Brake caliper decal	-	-	-	-	-	GU19652700	1	
7	Brake fluid line	-	-	-	-	-	GU63657121	1	
8	Pipe	-	-	-	-	-	GU18657140	1	
9	Cap	-	-	-	-	-	GU12735100	1	
10	Gasket	-	-	-	-	-	GU25656100	7	
11	Oil pipe screw *	-	-	-	-	-	GU95990028	1	
12	RH front brake caliper Grimeca	-	-	-	29895C	-	GU31652365	1	
13	Spring washer 8x15x0,3	-	-	-	-	-	GU61270300	2	
14	Washer 8,5X18X0,5	-	-	-	-	-	GU95100250	2	
	Washer 8,5X18X0,8	-	-	-	-	-	GU95100251	2	
15	Screw	-	-	-	-	-	GU98622422	2	
16	Pads pair GRIMECA	-	-	-	29895C	-	GU31654665	2	
	Pads pair BREMBO	-	-	-	-	-	GU27654610	1	
17	Brake caliper cover BREMBO	-	-	-	-	-	GU39654700	1	
	Brake caliper cover GRIMECA	-	-	-	29895C	-	GU31654765	1	
18	Rear pump rev. kit	-	-	-	-	-	GU17659352	1	
19	Bleeder+cap GRIMECA	-	-	-	29895C	-	GU31659265	1	
	Bleeder+cap BREMBO D.6	-	-	-	-	-	GU65659200	1	
20	Pins+spring GRIMECA	-	-	-	29895C	-	GU31659165	2	
	Pins+spring BREMBO	-	-	-	-	-	GU39659100	1	
21	Brake caliper rev. kit GRIMECA	-	-	-	29895C	-	GU66659031	1	
	Brake caliper rev. kit BREMBO	-	-	-	-	-	GU39659000	1	
23	Cap	-	-	-	-	-	GU39663801	1	
24	Pin	-	-	-	-	-	GU95510311	1	
25	Oil pipe connector screw	-	-	-	-	-	GU95990034	1	
26	Distributor	-	-	-	-	-	GU14656800	1	
27	Plate	-	-	-	-	-	GU19498060	1	
28	Hex screw M6X20	-	-	-	-	-	GU98054320	1	
29	Special washer	-	-	-	-	-	GU61013800	1	
30	Tank cap	-	-	-	-	-	GU17661052	1	

MOTO GUZZI	V 35 C - V 50 C 350 1982-1986	GU067	00	TAB N.	10

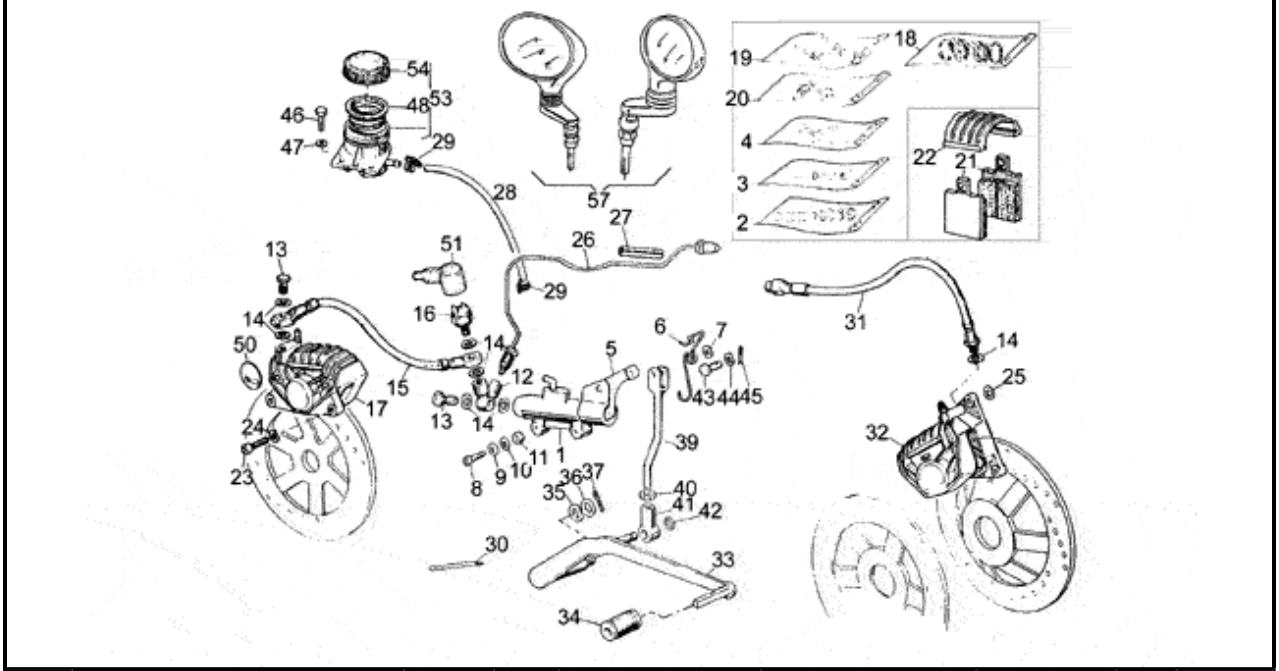

Pos.	Description	Year	I_M_	Country	Version	Code	Q.ty	P.Cod.
1	Rear master cylinder	-	-	-	-	GU31666990	1	
2	Pump revision kit	-	-	-	-	GU17659350	1	
3	Lever overhaul kit	-	-	-	-	GU19659600	1	
4	Pump connection overhaul unit	-	-	-	-	GU19659500	1	
5	Rear brake lever	-	-	-	-	GU19667500	1	
6	Rear brake lever spring	-	-	-	-	GU19667600	1	
7	Washer 6,15x11x0,8	-	-	-	-	GU95004206	1	
8	Screw	-	-	-	-	GU98052326	2	
9	Washer	-	-	-	-	GU95000206	2	
10	Notched washer	-	-	-	-	GU95021106	2	
11	Nut	-	-	-	-	GU92602206	2	
12	Connection	-	-	-	-	GU19668000	1	
13	Oil pipe screw *	-	-	-	-	GU95990028	2	
14	Gasket	-	-	-	-	GU25656100	7	
15	Pipe	-	-	-	-	GU17658550	1	
16	Brake light switch	-	-	-	-	GU14657050	1	
17	Rear brake caliper	-	-	-	-	GU23653011	1	
18	Brake caliper rev. kit GRIMECA	-	-	-	29895C	GU66659031	1	
	Brake caliper rev. kit BREMBO	-	-	-	-	GU39659000	2	
19	Pins+spring GRIMECA	-	-	-	29895C	GU31659165	2	
	Pins+spring BREMBO	-	-	-	-	GU39659100	2	
20	Bleeder+cap GRIMECA	-	-	-	29895C	GU31659265	1	
	Bleeder+cap BREMBO D.6	-	-	-	-	GU65659200	2	
21	Pads pair GRIMECA	-	-	-	29895C	GU31654665	2	
	Pads pair BREMBO	-	-	-	-	GU27654610	1	
22	Brake caliper cover GRIMECA	-	-	-	29895C	GU31654765	1	
	Brake caliper cover BREMBO	-	-	-	-	GU39654700	2	
23	Screw	-	-	-	-	GU98622422	4	
24	Spring washer 8x15x0,3	-	-	-	-	GU61270300	4	
25	Washer 8,5X18X0,8	-	-	-	-	GU95100251	2	
	Washer 8,5X18X0,5	-	-	-	-	GU95100250	2	
26	Pipe	-	-	-	-	GU19658735	1	
27	Piston ring	-	-	-	-	GU17659650	3	
28	Pipe	-	-	-	-	GU00823947090	1	

29	Hose clamp	-	-	-	-	-	GU19157800	2
30	Hose clamp 3,6x20,6	-	-	-	-	-	GU14609650	2
31	Brake hose	-	-	-	-	-	GU17658860	1
32	LH front brake caliper Grimeca	-	-	-	29895C	-	GU31652265	1
33	Rear brake lever	-	-	-	-	-	GU19677000	1
34	Rubber spacer	-	-	-	-	-	GU14251001	1
35	Spring washer	-	-	-	-	-	GU95129260	1
36	Flat washer	-	-	-	-	-	GU95004215	1
37	Split pin	-	-	-	-	-	GU95500227	1
39	Change gear tie rod compl.	-	-	-	-	-	GU19675000	1
40	Nut	-	-	-	-	-	GU92690073	1
41	Block	-	-	-	-	-	GU18257551	1
42	Circlip	-	-	-	-	-	GU90271008	1
43	Pin	-	-	-	-	-	GU95770265	1
44	Washer	-	-	-	-	-	GU95129110	1
45	Split pin	-	-	-	-	-	GU95500222	1
46	Screw	-	-	-	-	-	GU98052220	2
47	Washer 5,25x14x1,5	-	-	-	-	-	GU95100059	2
48	Tank cap	-	-	-	-	-	GU17661052	1
50	Rear brake cal. decal	-	-	-	-	-	GU19654900	1
51	Cap	-	-	-	-	-	GU12735100	1
53	Brake oil tank	-	-	-	-	-	GU65663500	1
54	Pump cover	-	-	-	-	-	GU17661152	1
57	Mirrors-pair	-	-	-	-	-	GU23999570	1

V 35 C - V 50 C 350 1982-1986	GU067	00	TAB N.	11
HANDLEBAR				

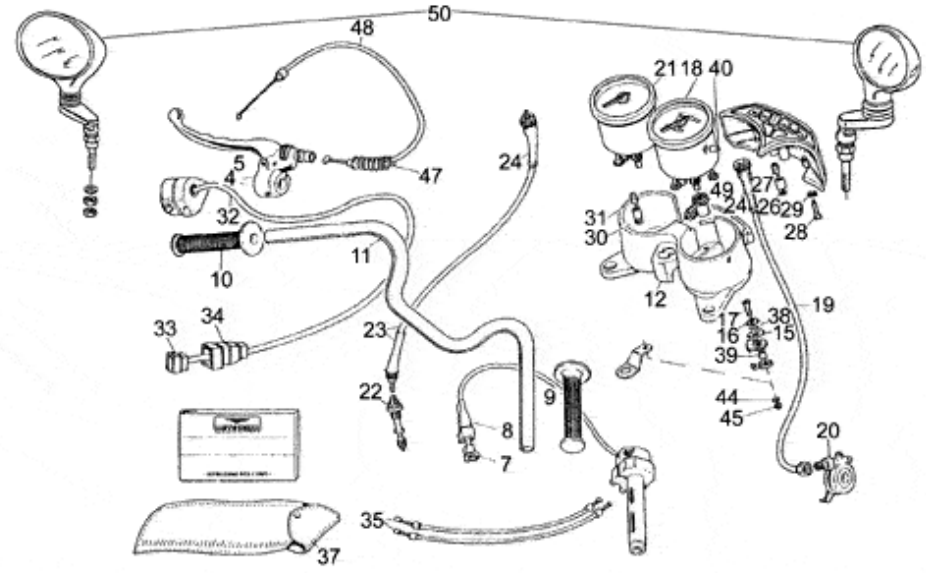

Pos.	Description	Year	I_M_	Country	Version		Code	Q.ty	P.Cod.
4	Clutch lever control	-	-	-	-	-	GU19605501	1	
5	Clutch lever	-	-	-	-	-	GU14605750	1	
7	4-way connector	-	-	-	-	-	GU17756160	1	
8	Cap	-	-	-	-	-	GU17756060	1	
9	RH hand grip	-	-	-	-	-	GU65603500	1	
10	LH hand grip	-	-	-	-	-	GU65603000	1	
11	Handlebar	-	-	-	-	-	GU29600351	1	
12	Instrument support	-	-	-	-	-	GU19501500	1	
15	Washer	-	-	-	-	-	GU95090142	2	
16	Washer	-	-	-	-	-	GU18577850	2	
17	Screw	-	-	-	-	-	GU98270641	2	
18	Speedometer	-	-	-	V50C	-	GU27761510001	1	
	Speedometer	-	-	-	V35C	-	GU19761500	1	
19	Transmission	-	-	-	-	-	GU19760480	1	
20	Speedometer gear Z=20/10	-	-	-	-	-	GU61762530	1	
21	Tachometer	-	-	-	V50C	-	GU17767260	1	
	Tachometer	-	-	-	V35C	-	GU19767200	1	
22	Gear Z=14	-	-	-	-	-	GU14769200	1	
23	Rev counter transmission	-	-	-	-	-	GU19768180	1	
24	Sheath	-	-	-	-	-	GU17762200	2	
26	Lampholder	-	-	-	-	-	GU19768680	8	
27	Lamp 12V-1,2W	-	-	-	-	-	GU93450140	8	
28	Screw	-	-	-	-	-	GU98830225	2	
29	Notched washer	-	-	-	-	-	GU95021105	2	
30	Lampholder	-	-	-	-	-	GU14768650	2	
31	Lamp 12v-3w	-	-	-	-	-	GU93450120	2	
32	LH lights selector	-	-	-	-	-	GU23738001	1	
33	Connector	-	-	-	-	-	GU61740551	1	
34	Rubber protection	-	-	-	-	-	GU35755780	1	
35	Throttle cable	-	-	-	V35C	-	GU19117545	2	
	Throttle cable	-	-	-	V50C	-	GU19117595	2	
37	Toolkit	-	-	-	-	-	GU28929940	1	
38	O-ring	-	-	-	-	-	GU45212400	2	
39	Spacer	-	-	-	-	-	GU91180721	2	

40	Reset button	-	-	-	-	-	GU19762810	1
44	Washer	-	-	-	-	-	GU95000206	1
45	Nut M6x1	-	-	-	-	-	GU92630106	2
47	Cap	-	-	-	-	-	GU17093850	1
48	Transmission	-	-	-	-	-	GU23093080	1
49	Gear 90°	-	-	-	-	-	GU17768360	2
50	Mirrors-pair	-	-	-	-	-	GU23999570	1

V 35 C - V 50 C 350 1982-1986	GU067	00	TAB N.	12
FOOT RESTS - LATERAL STAND				

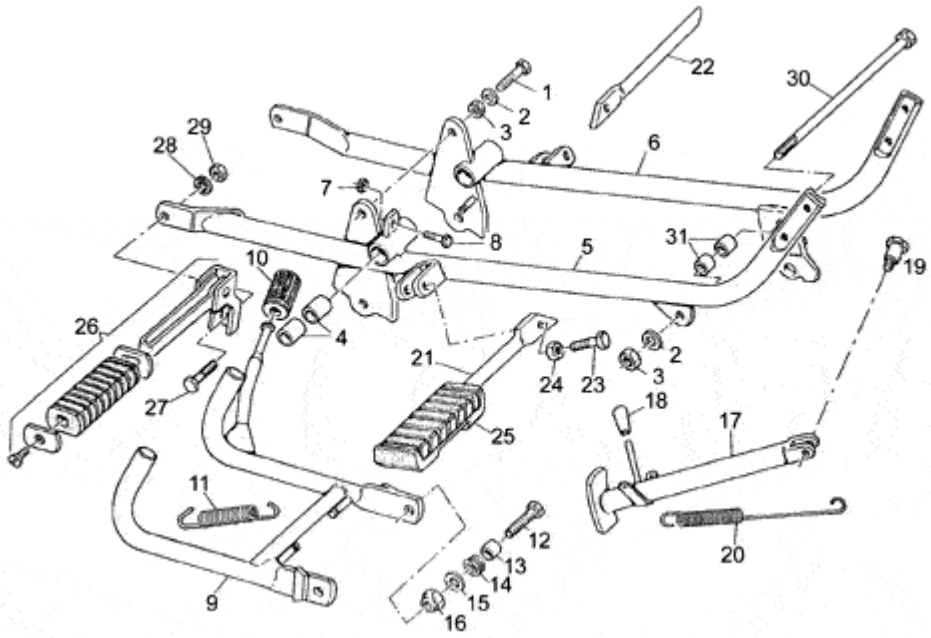

Pos.	Description	Year	I_M_	Country	Version	Code	Q.ty	P.Cod.
1	Screw	-	-	-	- -	GU98052565	2	
2	Washer 10,2x18x2	-	-	-	- -	GU95004210	4	
3	Nut	-	-	-	- -	GU92602210	4	
4	Bush 19 mm	-	-	-	- -	GU18252050	4	
5	RH craddle arm	-	-	-	- -	GU23420380	1	
6	LH craddle arm	-	-	-	- -	GU23422180	1	
7	Nut	-	-	-	- -	GU92602205	1	
8	Hex screw M6X22	-	-	-	- -	GU98054322	1	
9	Central stand	-	-	-	- -	GU19430305	1	
10	Rubber pedal	-	-	-	- -	GU13432640	1	
11	Lateral stand spring	-	-	-	- -	GU12434001	2	
12	Screw	-	-	-	- -	GU98054530	2	
13	Spacer	-	-	-	- -	GU91181114	2	
14	Spring	-	-	-	- -	GU94322215	1	
15	Washer	-	-	-	- -	GU95000210	2	
16	Nut M10x1,5	-	-	-	- -	GU92630510	2	
17	Side arm	-	-	-	- -	GU19432060	1	
18	Lockup rubber	-	-	-	- -	GU19433000	1	
19	Pin	-	-	-	- -	GU99105129	1	
20	Spring	-	-	-	- -	GU19434000	2	
21	RH pipe	-	-	-	- -	GU39440700	1	
22	LH pipe	-	-	-	- -	GU39441800	1	
23	Screw	-	-	-	- -	GU98820430	2	
24	Nut M8X1,25	-	-	-	- -	GU92602208	2	
25	Front footrest	-	-	-	- -	GU39443200	2	
26	Rear footrest	-	-	-	- -	GU61442300	2	
27	Hex screw M10X22	-	-	-	- -	GU98054522	2	
28	Notched washer	-	-	-	- -	GU95021110	2	
29	Nut	-	-	-	- -	GU92602410	2	
30	Pin M10x250	-	-	-	- -	GU53429500	1	
31	Bush	-	-	-	- -	GU19017000	2	

V 35 C - V 50 C 350 1982-1986	GU067	00	TAB N.	13
WHEELS				

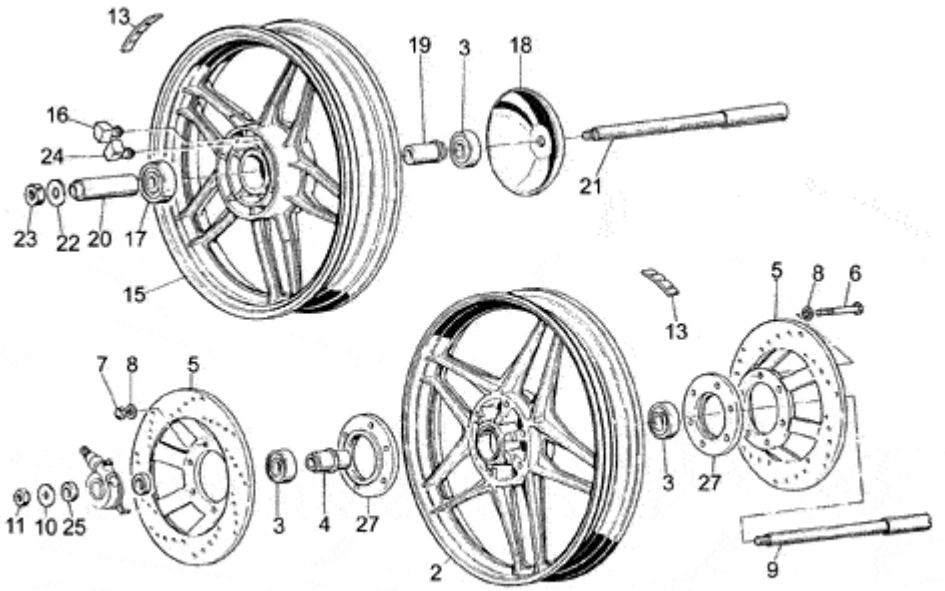

Pos.	Description	Year	I_M_	Country	Version	Code	Q.ty	P.Cod.
2	Front wheel 2,15x18	-	-	-	- -	GU23610380	1	
3	Bearing	-	-	-	- -	GU92204217	3	
4	Spacer	-	-	-	- -	GU19615335	1	
5	Brake disc	-	-	-	- -	GU31613380	2	
6	Screw m8x90	-	-	-	- -	GU98052490	6	
7	Cap nut	-	-	-	- -	GU92730082	6	
8	Washer	-	-	-	- -	GU95000208	12	
9	Front wheel spindle	-	-	-	- -	GU23614120	1	
	Front wheel spindle	-	-	-	T6-V35C -	GU62614120	1	
10	Washer 17X27X2	-	-	-	- -	GU95004217	1	
11	Nut M16X1,5	-	-	-	- -	GU92602516	1	
13	Counterweight	-	-	-	- -	GU14616150	4	
15	Rear wheel 2,50x16"	-	-	-	- -	GU23630680	1	
16	LH rubber coupling	-	-	-	- -	GU19632502	6	
17	Bearing	-	-	-	- -	GU92204218	1	
18	Protection	-	-	-	- -	GU19636400	1	
19	Bearing internal spacer	-	-	-	- -	GU19633935	1	
20	Spacer	-	-	-	- -	GU19634100	1	
21	Rear wheel spindle	-	-	-	- -	GU23633380	1	
22	Washer	-	-	-	- -	GU14634400	1	
23	Nut M6X1,5	-	-	-	- -	GU92602316	1	
24	RH rubber coupling	-	-	-	- -	GU19632501	6	
25	Spacer	-	-	-	- -	GU23616320	1	
	Spacer	-	-	-	T6-V35C -	GU62616320	1	
27	Flange	-	-	-	- -	GU14611255	2	

Revente Interdite - Revendita Vietata - Resaling Forbiden - Wiederverkauf Verboten

V 35 C - V 50 C 350 1982-1986	GU067	00	TAB N.	14
FRONT/REAR SHOCK ABSORBER				

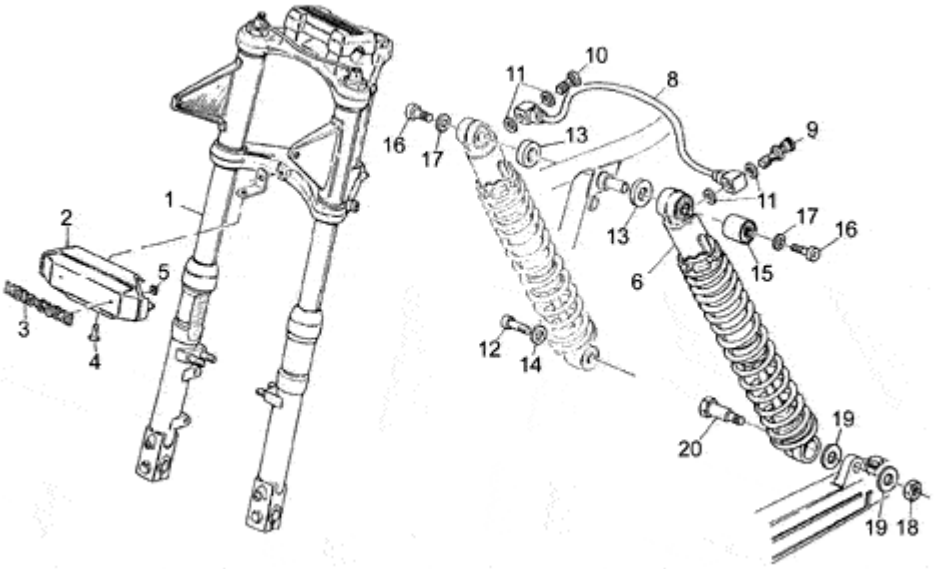

Pos.	Description	Year	I_M_	Country	Version	Code	Q.ty	P.Cod.
1	Front fork	-	-	-	- -	GU19490365	1	
2	Guard	-	-	-	- -	GU62497820	1	
3	Name plate Moto Guzzi	-	-	-	- -	GU19923480	1	
4	Screw	-	-	-	- -	GU98326014	1	
5	Plate	-	-	-	- -	GU39922200	2	
6	Shock absorber-pair	-	-	-	K -	GU23999270	1	
	Rear shock absorber	-	-	-	K -	GU31999240	1	
8	Pipe	-	-	-	P -	GU19556160	1	
	Pipe	-	-	-	S -	GU28556552	1	
9	Air valve	-	-	-	- -	GU28556250	1	
10	Bored screw	-	-	-	- -	GU28556450	1	
11	Copper washer	-	-	-	- -	GU28556350	4	
12	Screw	-	-	-	- -	GU98822416	4	
13	Spacer	-	-	-	- -	GU91181407	3	
14	Washer	-	-	-	- -	GU95100256	4	
15	Silent-block	-	-	-	- -	GU14551655	4	
16	Screw	-	-	-	- -	GU98822425	2	
17	Washer	-	-	-	- -	GU95004208	2	
18	Nut	-	-	-	- -	GU92602410	1	
19	Washer 10,2x18x2	-	-	-	- -	GU95004210	2	
20	Pin	-	-	-	- -	GU23555280	1	

Revente Interdite - Revendita Vietata - Resaling Forbiden - Wiederverkauf Verboten

V 35 C - V 50 C 350 1982-1986	GU067	00	TAB N.	15
FRAME				

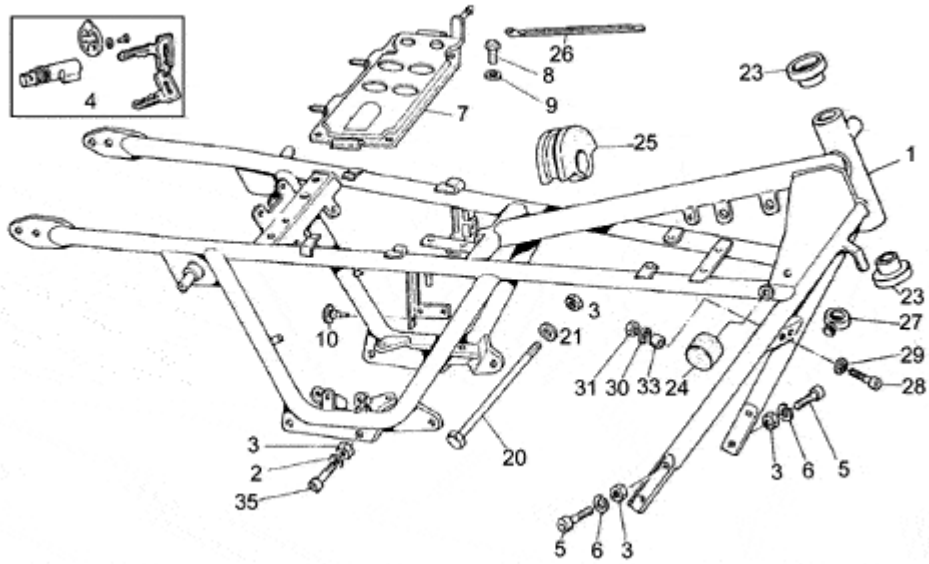

Pos.	Description	Year	I_M_	Country	Version	Code	Q.ty	P.Cod.
1	Frame	-	-	-	- -	GU23400180	1	
2	Washer 10,2x18x2	-	-	-	- -	GU95004210	2	
3	Nut	-	-	-	- -	GU92602210	7	
4	Lock	-	-	-	- -	GU19782520	1	
5	Screw 25 mm	-	-	-	- -	GU98622525	4	
6	Washer	-	-	-	- -	GU95120105	4	
7	Plate	-	-	-	- -	GU23418280	1	
8	Screw	-	-	-	- -	GU98054418	4	
9	Washer	-	-	-	- -	GU95004208	4	
10	Drift	-	-	-	- -	GU19705900	3	
20	Pin M10x205	-	-	-	- -	GU98110199	1	
21	Washer 10,2x18x2	-	-	-	- -	GU95004210	3	
23	Plug	-	-	-	- -	GU39515000	2	
24	Drift	-	-	-	- -	GU39103400	2	
25	Drift	-	-	-	- -	GU14107100	1	
26	Hose clamp 3,6x20,6	-	-	-	- -	GU14609650	1	
27	Eyelet	-	-	-	- -	GU19436500	1	
28	Screw	-	-	-	- -	GU98830430	1	
29	Washer	-	-	-	- -	GU95000208	1	
30	Spring washer	-	-	-	- -	GU95021108	1	
31	Nut M8X1,25	-	-	-	- -	GU92602208	1	
33	Spacer	-	-	-	- -	GU91181016	1	
35	Screw	-	-	-	- -	GU98052555	2	

V 35 C - V 50 C 350 1982-1986	GU067	00	TAB N.	16
DRIVE SHAFT				

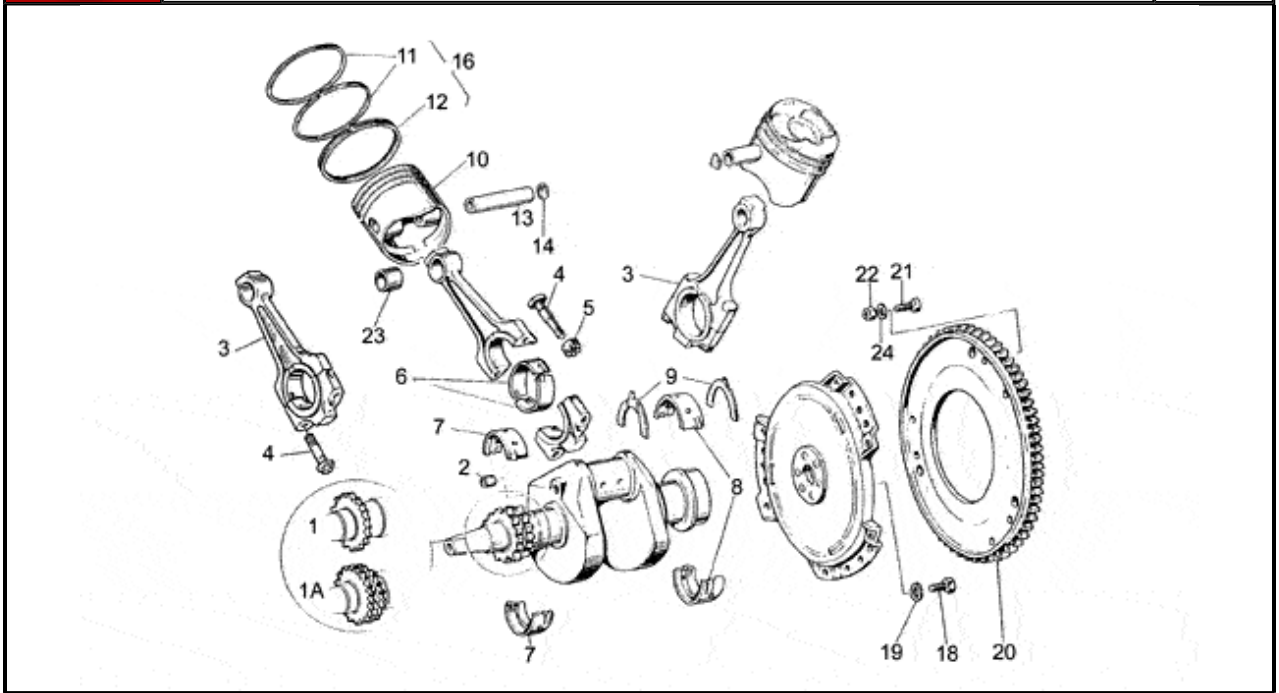

Pos.	Description	Year	I_M_	Country	Version	Code	Q.ty	P.Cod.
1	Crankshaft cpl.	-	-	-	M1-V35C -	GU19064121	1	
	Crankshaft with plug	-	-	-	M3-V50C -	GU19064181	1	
	Drive shaft	-	-	-	M4-V50C -	GU19064280	1	
	Drive shaft	-	-	-	M2-V35C -	GU19064120	1	
2	Plug	-	-	-	- -	GU19065400	1	
3	Connecting rod	-	-	-	- -	GU19061521	2	
4	Connecting rod screw	-	-	-	M6-V50C -	GU19062220	4	
	Screw	-	-	-	M7-V35C -	GU19062221	4	
	Connecting rod screw	-	-	-	M5-V35C -	GU19062220	4	
	Screw	-	-	-	M8-V50C -	GU19062221	4	
5	Nut	-	-	-	- -	GU61062401	4	
6	Bearing half-shell	-	-	-	- -	GU19062022	4	
7	Front main half-bearing	-	-	-	- -	GU19065623	2	
8	Rear main half-bearing	-	-	-	- -	GU19066522	2	
9	Shoulder	-	-	-	- -	GU31066480	2	
10	Piston	-	-	-	V50C -	GU19060481	2	
	Piston	-	-	-	V35C -	GU19060421	2	
11	Ring	-	-	-	V50C -	GU19060750	4	
	Piston ring	-	-	-	V35C -	GU19060700	4	
12	Piston ring	-	-	-	V35C -	GU19061000	2	
	Oil scraper ring	-	-	-	V50C -	GU19061050	2	
13	Piston pin	-	-	-	V35C -	GU19061220	2	
	Piston pin	-	-	-	V50C -	GU19061280	2	
14	Stop ring	-	-	-	- -	GU19061320	4	
16	Pistonring set	-	-	-	V35C -	GU19060600	2	
	Piston rings set	-	-	-	V50C -	GU19060650	2	
18	Screw	-	-	-	- -	GU19067700	6	
19	Washer 8,4X13X0,8	-	-	-	- -	GU14615901	6	
20	Chain ring MOTOPLAT	-	-	-	- -	GU19067900	1	
21	Hex screw M6X16	-	-	-	- -	GU98054316	6	
	Screw	-	-	-	- -	GU98054318	6	
22	Nut M6x1	-	-	-	- -	GU92630106	6	
23	Bush	-	-	-	- -	GU19061821	2	
24	Washer 6,4x10x0,7	-	-	-	- -	GU14217901	6	

V 35 C - V 50 C 350 1982-1986	GU067	00	TAB N.	17
EXHAUST-INTAKE UNIT				

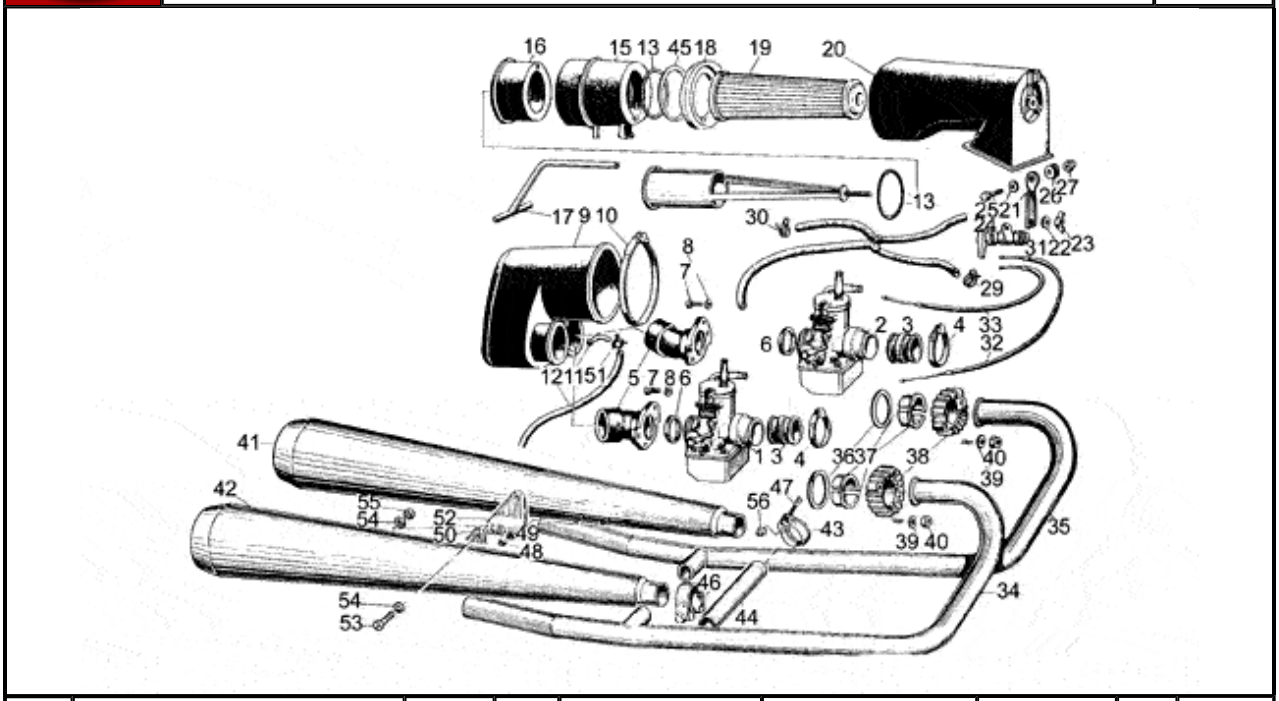

Pos.	Description	Year	I_M_	Country	Version	Code	Q.ty	P.Cod.
1	Carburettor RH PHBH 28 BD	-	-	-	V50C -	GU19112680	1	
2	Carburettor LH PHBH 28 BS	-	-	-	V50C -	GU19112681	1	
3	Hose	-	-	-	V35C -	GU19114320	2	
	Hose	-	-	-	V50C -	GU19114360	2	
4	Hose clamp 32X52X8	-	-	-	- -	GU93305032	4	
5	Manifold	-	-	-	V35C -	GU19114400	2	
	Manifold	-	-	-	V50C -	GU19114480	2	
6	Gasket ring	-	-	-	V50C -	GU19114680	2	
	Gasket ring	-	-	-	V35C -	GU90706315	2	
7	Screw	-	-	-	- -	GU98054214	4	
8	Washer	-	-	-	- -	GU95000205	4	
9	Intake manifold	-	-	-	- -	GU19114300	1	
10	Hose clamp	-	-	-	- -	GU93305092	1	
11	Pipe	-	-	-	- -	GU17114650	1	
12	Breather pipe	-	-	-	- -	GU00823942090	1	
13	Gasket ring	-	-	-	- -	GU90706552	2	
15	Front hose	-	-	-	- -	GU19156701	1	
16	Rear hose	-	-	-	- -	GU19156900	1	
17	Breather pipe	-	-	-	- -	GU19156001	1	
18	Ring	-	-	-	- -	GU17113450	1	
19	Air filter	-	-	-	- -	GU17113651	1	
20	Filter cover	-	-	-	- -	GU17114050	1	
21	Plate	-	-	-	- -	GU19114100	1	
22	Spring washer 5,3X10X0,5	-	-	-	- -	GU95129100	1	
23	Nut	-	-	-	- -	GU92670305	1	
24	Screw	-	-	-	- -	GU98052222	1	
25	Washer 5,25x14x1,5	-	-	-	- -	GU95100059	2	
26	Rubber spacer	-	-	-	- -	GU91551085	1	
27	Nut	-	-	-	- -	GU92630105	1	
29	Hose clamp	-	-	-	- -	GU61108400	2	
30	Hose clamp D9	-	-	-	- -	GU61108500	2	
31	Starter	-	-	-	- -	GU23133100	1	
32	Choke cable	-	-	-	- -	GU19133500	1	
33	LH choke cable	-	-	-	- -	GU19134000	1	

34	RH exhaust pipe	-	-	-	-	-	GU19120735	1
35	LH exhaust pipe	-	-	-	-	-	GU19120736	1
36	Gasket	-	-	-	V50C	-	GU19025280	2
	Exhaust pipe gasket	-	-	-	V35C	-	GU61025200	2
37	Spacer	-	-	-	-	-	GU61025400	4
38	Exhaust ring nut	-	-	-	-	-	GU19121050	2
39	Special washer	-	-	-	-	-	GU61013800	4
40	Nut	-	-	-	-	-	GU92701062	4
41	LH silencer	-	-	-	-	-	GU19122936	1
42	RH silencer	-	-	-	-	-	GU19123036	1
43	Hose clamp	-	-	-	-	-	GU61126920	2
44	Pipe	-	-	D	-	-	GU23121180	1
	Exhaust pipe	-	-	-	-	-	GU19121135	1
45	Gasket	-	-	-	-	-	GU19113900	1
46	Hose clamp	-	-	-	-	-	GU19123435	2
47	Screw	-	-	-	-	-	GU61127520	2
48	Nut M8X1,25	-	-	-	-	-	GU92602208	4
49	Spring washer 8x15x0,3	-	-	-	-	-	GU61270300	4
50	RH plate	-	-	-	-	-	GU19128660	1
51	Hose clamp	-	-	-	-	-	GU35108450	2
52	LH plate	-	-	-	-	-	GU19128760	1
53	Hex screw M10X35	-	-	-	-	-	GU98054535	2
54	Notched washer	-	-	-	-	-	GU95021110	4
55	Nut	-	-	-	-	-	GU92602410	2
56	Ring nut	-	-	-	-	-	GU61127220	2

V 35 C - V 50 C 350 1982-1986	GU067	00	TAB N.	18

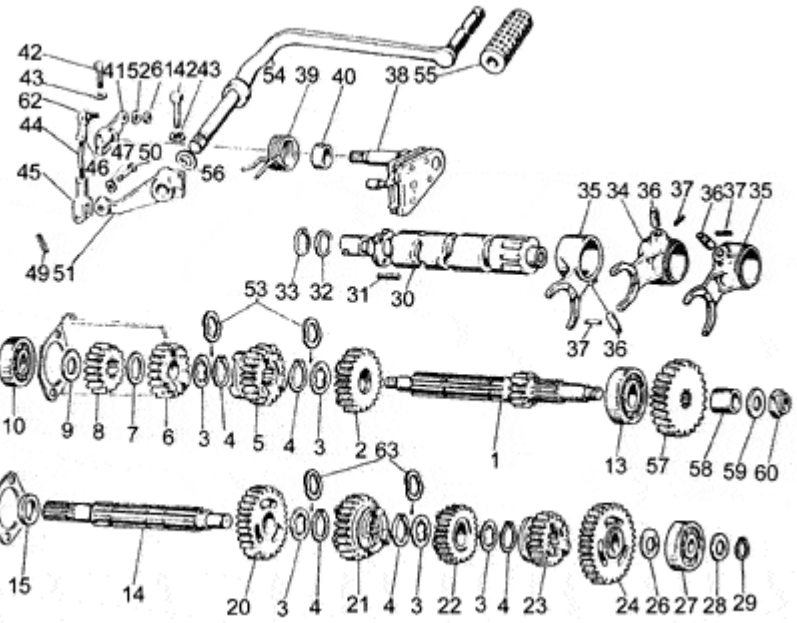

Pos.	Description	Year	I_M_	Country	Version	Code	Q.ty	P.Cod.
1	Primary gear shaft Z=11	-	-	-	- -	GU19210520	1	
2	Gear 5a AS Z=22	-	-	-	- -	GU19212020	1	
3	Thrust washer mm1	-	-	-	- -	GU19215420	5	
4	Circlip	-	-	-	- -	GU90271220	5	
5	Gear 4a AS Z=22	-	-	-	- -	GU19211820	1	
6	Gear 3a AS Z=18	-	-	-	- -	GU19211420	1	
7	Thrust washer	-	-	-	- -	GU19214620	1	
8	Gear	-	-	-	- -	GU19211320	1	
9	Washer	-	-	-	- -	GU19212800	1	
10	Ball bearing	-	-	-	- -	GU92201415	1	
11	Clearance washer	-	-	-	- -	GU39238100	1	
12	Nut	-	-	-	- -	GU10054100	1	
13	Bearing 20X47X14	-	-	-	- -	GU92201220	1	
14	Driven shaft	-	-	-	- -	GU19213620	1	
15	Spacer	-	-	-	- -	GU19212900	1	
16	Bearing 20X47X14	-	-	-	- -	GU92201220	1	
17	Spacer	-	-	-	- -	GU19213720	1	
18	Gasket ring 18,77X1,78	-	-	-	- -	GU90706188	1	
19	Circlip	-	-	-	- -	GU90271121	1	
20	Gear	-	-	-	- -	GU19214501	1	
21	Gear	-	-	-	- -	GU19214820	1	
22	Gear	-	-	-	- -	GU19215121	1	
23	Gear	-	-	-	- -	GU19215220	1	
24	Gear	-	-	-	- -	GU19214001	1	
26	Spacer	-	-	-	- -	GU35214300	1	
27	Ball bearing	-	-	-	- -	GU92201415	1	
28	Spacer	-	-	-	- -	GU35214300	1	
	Thrust washer	-	-	-	- -	GU39239300	1	
29	Circlip	-	-	-	- -	GU90271115	1	
30	Shift cam	-	-	-	- -	GU19234420	1	
31	Pin	-	-	-	- -	GU19234600	4	
32	Spacer 1 mm	-	-	-	- -	GU19355300	1	
33	Snap ring	-	-	-	- -	GU90271020	1	

34	Fork AP	-	-	-	-	-	GU19231220	1
35	Fork AS	-	-	-	-	-	GU19231020	2
36	Roller	-	-	-	-	-	GU92297909	3
37	Pin	-	-	-	-	-	GU95520316	3
38	Pre-selector kit	-	-	-	01397N	-	GU20999520	1
39	Spring	-	-	-	-	-	GU61238200	1
	Spring	-	-	-	01397N	-	GU28238261	1
40	Spacer	-	-	-	01397N	-	GU20208520	1
	Bush	-	-	-	-	-	GU91182010	1
41	Shift lever	-	-	-	-	-	GU19258220	1
42	Screw	-	-	-	-	-	GU98052325	2
43	Notched washer	-	-	-	-	-	GU95021106	2
44	Tie rod	-	-	-	-	-	GU18257950	1
45	Fork	-	-	-	-	-	GU12626800	1
46	Nut	-	-	-	-	-	GU92602206	2
47	Washer	-	-	-	-	-	GU95129110	1
49	Split pin	-	-	-	-	-	GU95500222	1
50	Pin	-	-	-	-	-	GU95770265	1
51	Lever	-	-	-	-	-	GU19256920	1
52	Special washer	-	-	-	-	-	GU61013800	1
54	Complete gearchange lever	-	-	-	-	-	GU19250900	1
55	Rubber spacer	-	-	-	-	-	GU14251001	1
56	Spring washer	-	-	-	-	-	GU95129260	1
57	Gear Z=24	-	-	-	V35C	-	GU19211120	1
	Idle gear Z=23	-	-	-	V50C	-	GU19211140	1
58	Bush	-	-	-	-	-	GU19266720	1
59	Clearance washer	-	-	-	-	-	GU39238100	1
60	Nut	-	-	-	-	-	GU10054100	1
61	Nut M6x1	-	-	-	-	-	GU92630106	1
62	Ball joint	-	-	-	-	-	GU18258101	1
63	Washer	-	-	-	-	-	GU19214320	4

V 35 C - V 50 C 350 1982-1986	GU067	00	TAB N.	19
CARBURETTORS V35C				

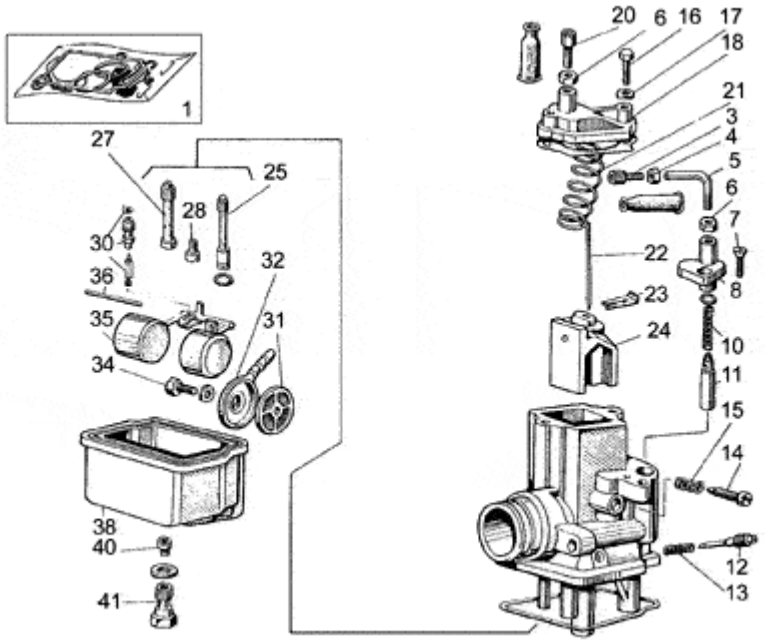

Pos.	Description	Year	I_M_	Country	Version	Code	Q.ty	P.Cod.
1	Gasket envelope	-	-	-	- -	GU39939900	2	
3	Wire tensioner screw	-	-	-	- -	GU53937200	2	
4	Nut	-	-	-	- -	GU19938880	2	
5	Pipe	-	-	-	- -	GU49938900	2	
6	Nut	-	-	-	- -	GU12937300	4	
7	Screw	-	-	-	- -	GU13937900	2	
8	Starter device cover	-	-	-	- -	GU17937450	2	
10	Valve spring	-	-	-	- -	GU39937600	2	
11	Starter valve	-	-	-	- -	GU13937800	2	
12	Adj.min.eng.speed screw	-	-	-	- -	GU13936200	2	
13	Spring	-	-	-	- -	GU13936300	2	
14	Gas valve adjuster screw	-	-	-	- -	GU13936600	2	
15	Spring	-	-	-	- -	GU13936700	2	
16	Screw	-	-	-	- -	GU13932800	4	
17	Washer	-	-	-	- -	GU13932900	4	
18	Valve cover	-	-	-	- -	GU53935000	2	
20	Wire tensioner screw	-	-	-	- -	GU12937200	2	
21	Gas valve return spring	-	-	-	- -	GU53937100	2	
24	Gas valve 40	-	-	-	- -	GU61934800	2	
25	Starter jet 60	-	-	-	- -	GU19936000	2	
27	Needle valve 260AH	-	-	-	- -	GU19935500	2	
28	Idle jet 40	-	-	-	- -	GU19935900	2	
30	Needle valve	-	-	-	- -	GU19934600	2	
31	Fuel filter	-	-	-	- -	GU43934000	2	
32	Fuel pipe union cap	-	-	-	- -	GU13934600	2	
34	Cap fixing screw	-	-	-	- -	GU10934900	2	
35	Float	-	-	-	- -	GU61934300	2	
36	Float pin	-	-	-	- -	GU13933100	2	
38	Float chamber	-	-	-	- -	GU10934400	2	
40	Main jet 108	-	-	-	- -	GU19935701	2	
41	Plug with OR	-	-	-	- -	GU10933700	2	

V 35 C - V 50 C 350 1982-1986	GU067	00	TAB N.	20
CARBURETTORS V50C				

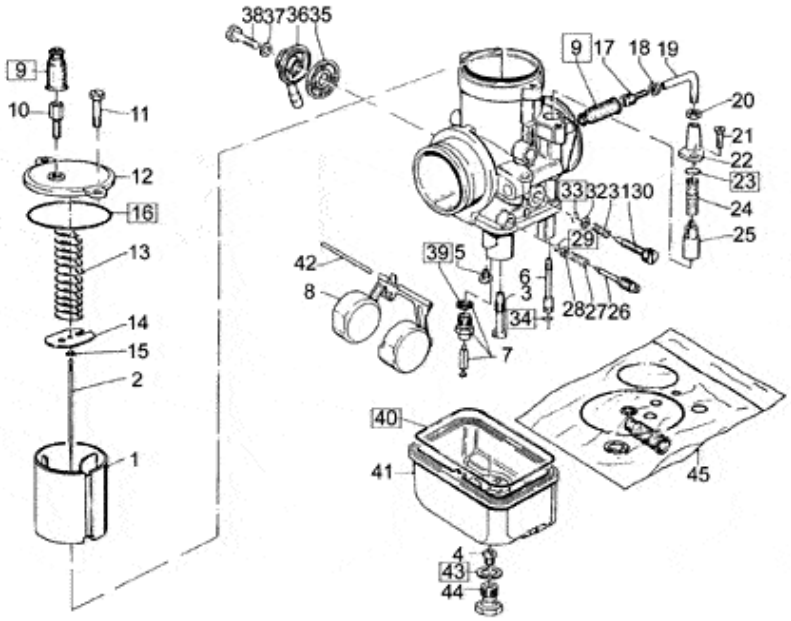

Pos.	Description	Year	I_M_	Country	Version	Code	Q.ty	P.Cod.
1	Gas valve 50	-	-	-	- -	GU19934880	2	
2	Conical pin 6	-	-	-	- -	GU19934980	2	
3	Needle valve 268T	-	-	-	- -	GU19935580	2	
4	Main jet 118	-	-	-	- -	GU19935780	2	
5	Idle jet 50	-	-	-	- -	GU66935910	2	
6	Starter jet 60	-	-	-	- -	GU19936000	2	
7	Needle valve	-	-	-	- -	GU19934600	2	
8	Float gr.9,5	-	-	-	- -	GU27934315	2	
10	Wire tensioner screw	-	-	-	- -	GU12937200	2	
11	Screw	-	-	-	- -	GU14934650	2	
12	Cover	-	-	-	- -	GU19935080	2	
13	Gas valve return spring	-	-	-	- -	GU19937180	2	
14	Plate	-	-	-	- -	GU19938580	2	
15	Conical pin clip	-	-	-	- -	GU65933600	2	
17	Wire tensioner screw	-	-	-	- -	GU53937200	2	
18	Nut	-	-	-	- -	GU19938880	2	
19	Pipe	-	-	-	- -	GU49938900	2	
20	Nut	-	-	-	- -	GU12937300	4	
21	Screw	-	-	-	- -	GU13937900	2	
22	Starter device cover	-	-	-	- -	GU17937450	2	
24	Valve spring	-	-	-	- -	GU39937600	2	
25	Starter valve	-	-	-	- -	GU13937800	2	
26	Adj.min.eng.speed screw	-	-	-	- -	GU13936200	2	
27	Spring	-	-	-	- -	GU13936300	2	
28	Flat washer	-	-	-	- -	GU65933700	2	
30	Gas valve adjuster screw	-	-	-	- -	GU13936600	2	
31	Spring	-	-	-	- -	GU13936700	2	
32	Flat washer	-	-	-	- -	GU14931650	2	
35	Fuel filter	-	-	-	- -	GU43934000	2	
36	Fuel pipe union cap	-	-	-	- -	GU13934600	2	
37	Gasket	-	-	-	- -	GU13934700	2	
38	Cap fixing screw	-	-	-	- -	GU10934900	2	
41	Aluminium float chamber	-	-	-	- -	GU19934480	2	
42	Float pin	-	-	-	- -	GU13933100	2	
44	Plug with OR	-	-	-	- -	GU10933700	2	
45	Gaskets set	-	-	-	- -	GU19939980	1	

V 35 C - V 50 C 350 1982-1986	GU067	00	TAB N.	21

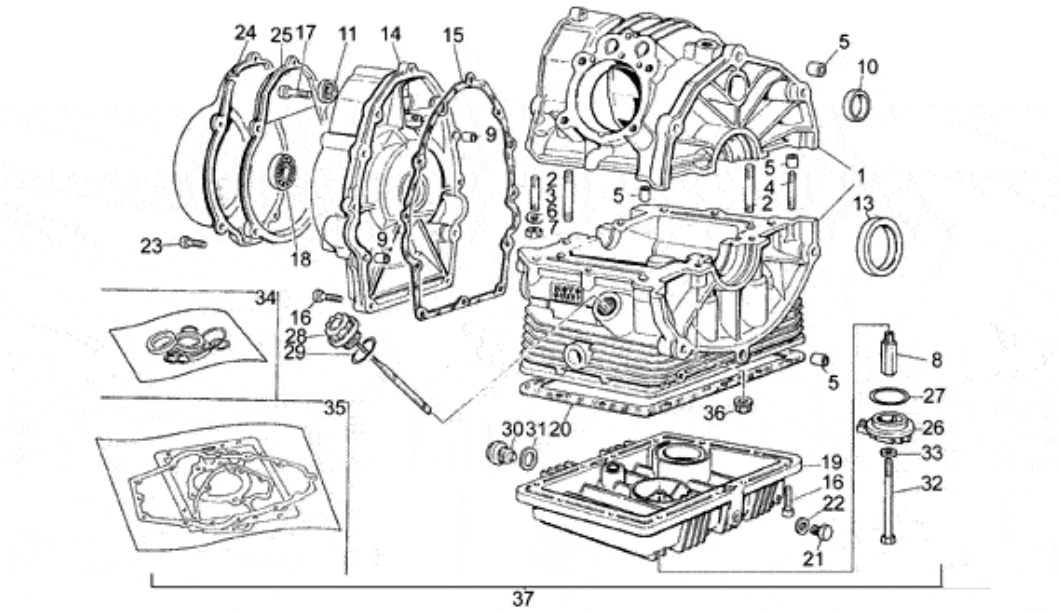

Pos.	Description	Year	I_M_	Country	Version		Code	Q.ty	P.Cod.
1	Crankcase, blank	-	-	-	-	-	GU19000120	1	
2	Stud bolt	-	-	-	-	-	GU96451560	4	
3	Stud bolt	-	-	-	-	-	GU96451430	4	
4	Stud bolt	-	-	-	-	-	GU96508055	2	
5	Bush	-	-	-	-	-	GU19015020	2	
6	Spring washer 8x15x0,3	-	-	-	-	-	GU61270300	6	
7	Nut M8X1,25	-	-	-	-	-	GU92602208	6	
8	Union	-	-	-	-	-	GU19003800	1	
9	Bush 6,6x9x13	-	-	-	-	-	GU19002020	2	
10	Plug	-	-	-	-	-	GU19016320	1	
11	Gasket ring	-	-	-	-	-	GU90401530	1	
13	Gasket ring	-	-	-	-	-	GU90405367	1	
14	Timing system cover, blank	-	-	-	-	-	GU19001420	1	
15	Gasket	-	-	-	-	-	GU19001200	1	
16	Hex socket screw M6X25	-	-	-	-	-	GU98622325	22	
17	Screw M6X30	-	-	-	-	-	GU98620330	2	
18	Gasket ring 28x38x7	-	-	-	-	-	GU90402840	1	
19	Motor oil cup	-	-	-	-	-	GU19003502	1	
20	Gasket	-	-	-	-	-	GU19003602	1	
21	Oil level plug	-	-	-	-	-	GU95980214	1	
22	Gasket	-	-	-	-	-	GU10528900	1	
23	Screw M6X35	-	-	-	-	-	GU98620335	5	
24	Cover	-	-	-	-	-	GU27001636	1	
25	Flange	-	-	-	-	-	GU27001136	1	
26	Cover, blank	-	-	-	-	-	GU19003400	1	
27	O-ring	-	-	-	-	-	GU90706444	1	
28	Oil filler plug	-	-	-	-	-	GU19004920	1	
29	Gasket ring	-	-	-	-	-	GU90706282	1	
30	Oil unload plug	-	-	-	-	-	GU12003702	1	
31	Gasket 20,1x28x2	-	-	-	-	-	GU95100709	1	
32	Screw m8x90	-	-	-	-	-	GU98052490	1	
33	Gasket 8,25x15x1	-	-	-	-	-	GU12154200	1	
34	Oil seals - set	-	-	-	-	-	GU31999565	1	
35	Engine set gasket	-	-	-	V35C	-	GU19999020	1	
	Engine set gasket	-	-	-	V50C	-	GU19999080	1	
36	Column nut	-	-	-	-	-	GU92660010	4	
37	Engine	-	-	-	V50C	-	GU19991080	1	

V 35 C - V 50 C 350 1982-1986	GU067	00	TAB N.	22
CYLINDER HEAD				

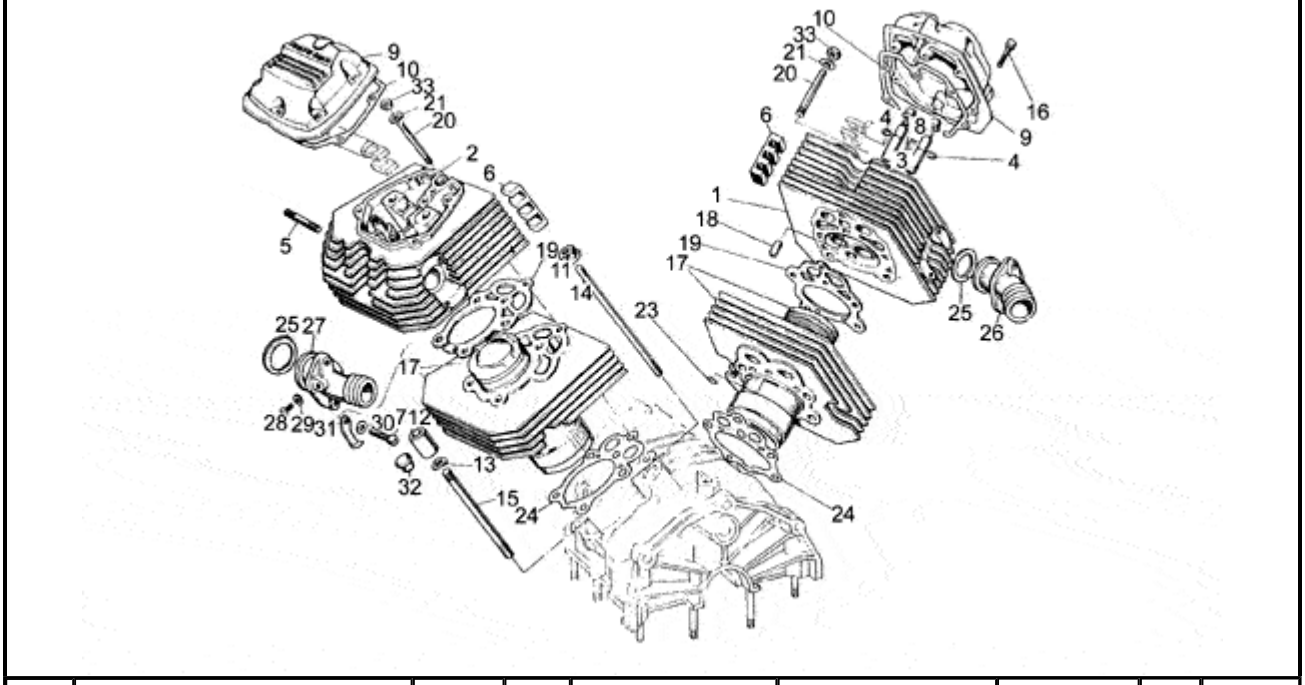

Pos.	Description	Year	I_M_	Country	Version	Code	Q.ty	P.Cod.
1	RH head	-	-	-	V50C -	GU19022180	1	
	RH head	-	-	-	V35C -	GU19022120	1	
2	LH head	-	-	-	V35C -	GU19022220	1	
	LH head	-	-	-	V50C -	GU19022280	1	
3	Valve guide	-	-	-	- -	GU61036801	4	
4	Snap ring	-	-	-	- -	GU90353009	4	
5	Stud bolt	-	-	-	- -	GU96506042	4	
6	Anti-vibration plate	-	-	-	- -	GU19025300	4	
7	Screw	-	-	-	- -	GU98822325	4	
8	Oil seal	-	-	-	- -	GU19037820	4	
9	Valves cover	-	-	-	- -	GU19023520	2	
10	Gasket	-	-	-	- -	GU19023700	2	
11	Column nut	-	-	-	- -	GU92660010	4	
12	Column nut	-	-	-	- -	GU13021900	4	
13	Washer 10,5X18X0,8	-	-	-	- -	GU95129180	4	
14	Stud bolt	-	-	-	- -	GU96510182	4	
15	Stud bolt 125 mm	-	-	-	- -	GU96510125	4	
16	Hex socket screw M6X25	-	-	-	- -	GU98622325	12	
17	Cylinder with piston, blank	-	-	-	V50C -	GU19060181	2	
	Cylinder with piston	-	-	-	V35C -	GU19060121	2	
18	Bush	-	-	-	- -	GU19021320	2	
19	Gasket	-	-	-	V50C -	GU19022082	2	
	Cylinder head gasket	-	-	-	V35C -	GU27022020	2	
20	Stud bolt	-	-	-	- -	GU96508107	2	
21	Spring washer 8x15x0,3	-	-	-	- -	GU61270300	2	
23	O-ring	-	-	-	- -	GU61027200	2	
24	Gasket	-	-	-	- -	GU19020820	2	
25	Gasket	-	-	-	V50C -	GU19115580	2	
	Gasket	-	-	-	V35C -	GU19115520	2	
26	RH manifold	-	-	-	V35C -	GU19115035	1	
	RH manifold, blank MOTOPLAT	-	-	-	V50C -	GU19115080	1	
27	LH manifold	-	-	-	V35C -	GU19115036	1	
	LH manifold, blank MOTOPLAT	-	-	-	V50C -	GU19115081	1	

28	Screw	-	-	-	-	-	GU98310610	2
29	Washer 6,25x10x1,5	-	-	-	-	-	GU95100116	2
30	Special washer	-	-	-	-	-	GU61013800	2
31	Hose clamp	-	-	-	-	-	GU19718000	2
32	Plug	-	-	-	-	-	GU93180245	4
33	Nut	-	-	-	-	-	GU19021920	2

V 35 C - V 50 C 350 1982-1986	GU067	00	TAB N.	23

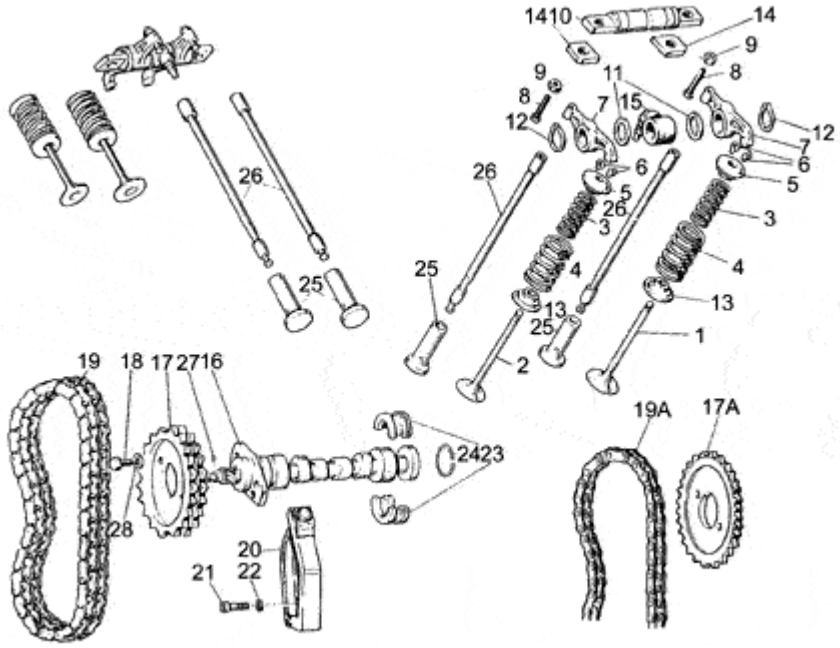

Pos.	Description	Year	I_M_	Country	Version	Code	Q.ty	P.Cod.
1	Intake valve	-	-	-	V50C -	GU19036082	2	
	Intake valve	-	-	-	V35C -	GU19036021	2	
2	Exhaust valve	-	-	-	V50C -	GU19036183	2	
	Exhaust valve	-	-	-	V35C -	GU23036100	2	
3	Spring	-	-	-	- -	GU61037600	4	
4	Spring	-	-	-	- -	GU61037500	4	
5	Upper cup	-	-	-	- -	GU61038000	4	
6	Half-cone	-	-	-	- -	GU61038100	8	
7	Rocker arm assy.	-	-	-	- -	GU19030500	4	
8	Screw	-	-	-	- -	GU19034000	4	
9	Nut M6x1	-	-	-	- -	GU92602406	4	
10	Rocker shaft	-	-	-	V35C -	GU19032000	2	
	Rocker shaft	-	-	-	V50C -	GU19032080	2	
11	Clearance washer	-	-	-	V35C -	GU19032300	4	
	Thrust washer	-	-	-	V50C -	GU19032380	4	
12	Circlip	-	-	-	- -	GU90271018	4	
13	Lower cup	-	-	-	- -	GU61037000	4	
14	Spacer	-	-	-	V50C -	GU19032980	4	
	Spacer	-	-	-	V35C -	GU19032900	4	
15	Hose	-	-	-	- -	GU19027500	2	
16	Camshaft	-	-	-	- -	GU27053362	1	
17	Timing system gear	-	-	-	M2-V35C -	GU19054520	1	
	Timing system gear	-	-	-	M4-V50C -	GU19054520	1	
	Timing system gear	-	-	-	M1-V35C -	GU19054521	1	
	Timing system gear	-	-	-	M3-V35C -	GU19054521	1	
18	Bolt	-	-	-	- -	GU61054900	2	
19	Camshaft chain	-	-	-	M1-V35C -	GU19058021	1	
	Camshaft chain	-	-	-	M3-V35C -	GU19058021	1	
	Camshaft chain	-	-	-	M4-V50C -	GU19058020	1	
	Camshaft chain	-	-	-	M2-V35C -	GU19058020	1	
20	Chain stretching drive	-	-	-	- -	GU19058220	1	
21	Screw	-	-	-	- -	GU98822316	1	
22	Washer	-	-	-	- -	GU95129115	1	

23	Sector	-	-	-	-	-	GU19055700	2
24	Snap ring	-	-	-	-	-	GU90353029	1
25	Tappet	-	-	-	-	-	GU19045861	4
26	Rocker arm rod	-	-	-	-	-	GU19045020	4
27	Roller	-	-	-	-	-	GU95512035	1
28	Safety washer	-	-	-	-	-	GU23217800	2

V 35 C - V 50 C 350 1982-1986	GU067	00	TAB N.	24
CLUTCH				

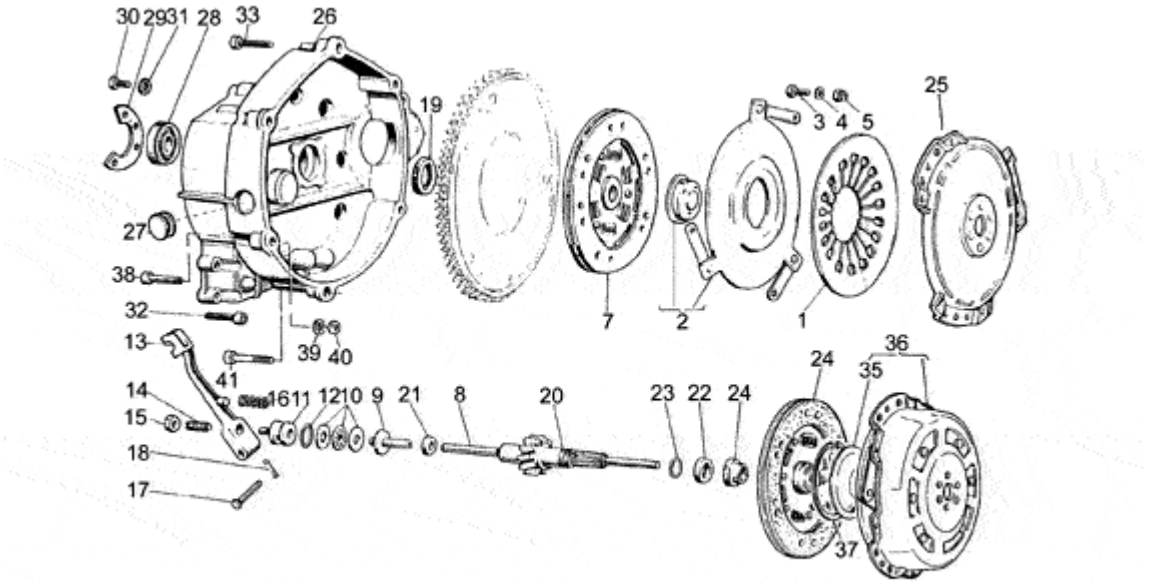

Pos.	Description	Year	I_M_	Country	Version	Code	Q.ty	P.Cod.
1	Belleville spring	-	-	-	V35C -	GU19084100	1	
	Belleville spring	-	-	-	V50C -	GU19084100	1	
2	Pressure plate	-	-	-	- -	GU19082501	1	
3	Screw	-	-	-	- -	GU98054214	3	
4	Washer	-	-	-	- -	GU95004205	3	
5	Nut	-	-	-	- -	GU92630105	3	
7	Driven clutch disc	-	-	-	- -	GU27084420	1	
8	Rod	-	-	-	- -	GU20085720	1	
9	Inner body	-	-	-	- -	GU14086000	1	
10	Thrust bearing	-	-	-	- -	GU12087001	1	
11	Outer body	-	-	-	- -	GU14086100	1	
12	O-ring 17,13x2,62	-	-	-	- -	GU90706170	1	
13	Clutch relese shaft	-	-	-	- -	GU14090201	1	
14	Adjuster screw	-	-	-	- -	GU14090400	1	
15	Nut M8X1	-	-	-	- -	GU92602508	1	
16	Lever return spring	-	-	-	- -	GU94321105	1	
17	Pin 7x39	-	-	-	- -	GU95780271	1	
18	Split pin	-	-	-	- -	GU95500222	1	
19	Gasket ring 28x40x7	-	-	-	- -	GU90402841	1	
20	Transmission shaft Z=13	-	-	-	V35C -	GU19210720	1	
	Transmission shaft Z=14	-	-	-	V50C -	GU19210740	1	
21	Gasket ring 6x16x7	-	-	-	- -	GU90400616	1	
22	Spacer	-	-	-	- -	GU19213720	1	
23	Gasket ring 18,77X1,78	-	-	-	- -	GU90706188	1	
24	Nut	-	-	-	- -	GU19356700	1	
25	Clutch drum	-	-	-	- -	GU19080300	1	
26	Clutch drum	-	-	-	- -	GU19200422	1	
27	Plug	-	-	-	- -	GU93180220	1	
28	Bearing 20X47X14	-	-	-	- -	GU92201220	1	
29	Bearing fixing plate	-	-	-	- -	GU19203420	1	
30	Screw	-	-	-	- -	GU98054314	3	
31	Washer 6,4x10x0,7	-	-	-	- -	GU14217901	3	
32	Screw M6X30	-	-	-	- -	GU98620330	11	

33	Screw M8X35	-	-	-	-	-	GU98620435	3
34	Driven clutch disc	-	-	-	-	-	GU27084420	1
35	New cup type	-	-	-	-	-	GU19083462	1
36	Clutch control	-	-	-	-	-	GU19080161	1
37	Snap ring	-	-	-	-	-	GU90272075	1
38	Screw	-	-	-	-	-	GU98620450	1
39	Spring washer 8x15x0,3	-	-	-	-	-	GU61270300	6
40	Nut M8X1,25	-	-	-	-	-	GU92602208	1
41	Screw M8X40	-	-	-	-	-	GU98620440	2

V 35 C - V 50 C 350 1982-1986	GU067	00	TAB N.	25
OIL PUMP-FILTER				

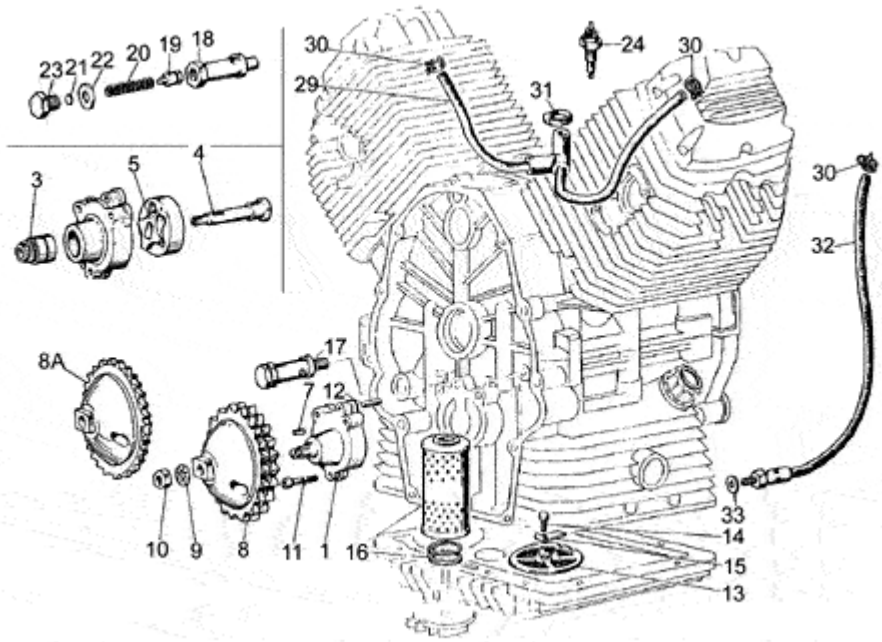

Pos.	Description	Year	I_M_	Country	Version		Code	Q.ty	P.Cod.
1	Oil pump	-	-	-	-	-	GU19146422	1	
3	Roller bearing 10x22x20	-	-	-	-	-	GU92252210	1	
4	Oil pump shaft assy.	-	-	-	-	-	GU19147820	1	
5	Inner rotor	-	-	-	-	-	GU19148420	1	
7	Guide roller	-	-	-	-	-	GU92296726	1	
8	Drive gear	-	-	-	M2-V35C	-	GU19147720	1	
	Drive gear	-	-	-	M4-V50C	-	GU19147720	1	
	Oil pump gear	-	-	-	M1-V35C	-	GU19147721	1	
	Oil pump gear	-	-	-	M3-V35C	-	GU19147721	1	
9	Washer 10,5x16x1	-	-	-	-	-	GU19149800	1	
10	Nut M10x1,25	-	-	-	-	-	GU92602510	1	
11	Screw M6X35	-	-	-	-	-	GU98620335	3	
12	Pin	-	-	-	-	-	GU19018920	2	
13	Oil filter	-	-	-	-	-	GU19152200	1	
14	Screw	-	-	-	-	-	GU98054314	1	
15	Plate	-	-	-	-	-	GU95187006	1	
16	Oil filter	-	-	-	-	-	GU19153000	1	
17	Oil valve cpl.	-	-	-	-	-	GU10158201	1	
18	Valve body	-	-	-	-	-	GU10158701	1	
19	Piston	-	-	-	-	-	GU12150900	1	
20	Valve spring	-	-	-	-	-	GU94321072	1	
21	Bottom	-	-	-	-	-	GU12150700	1	
22	Washer 14,5X20X1	-	-	-	-	-	GU95100523	3	
23	Plug	-	-	-	-	-	GU12159000	1	
24	Pressure sensor	-	-	-	02201N	-	GU31999581	1	
29	Breather pipe	-	-	-	-	-	GU19159600	1	
30	Hose clamp	-	-	-	-	-	GU61108400	3	
31	Hose clamp	-	-	-	-	-	GU28157850	1	
32	Breather	-	-	-	-	-	GU19159300	1	
	Breather	-	-	-	-	-	GU19159320	1	
33	Gasket 8,25x15x1	-	-	-	-	-	GU12154200	1	

Revente Interdite - Revendita Vietata - Resaling Forbiden - Wiederverkauf Verboten

V 35 C - V 50 C 350 1982-1986	GU067	00	TAB N.	26
TRANSMISSION CAGE				

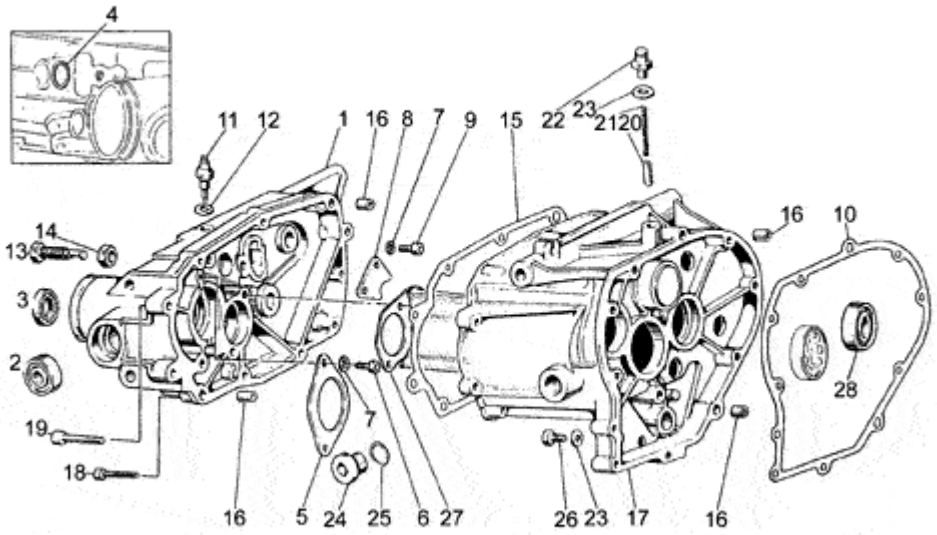

Pos.	Description	Year	I_M_	Country	Version	Code	Q.ty	P.Cod.
1	Box cover	-	-	-	- -	GU19200821	1	
2	Bearing 15x35x11	-	-	-	- -	GU92204215	2	
3	Gasket ring 28x40x7	-	-	-	- -	GU90402841	1	
4	O-ring 13,95x2,92	-	-	-	- -	GU90706140	1	
5	Plate	-	-	-	- -	GU19213820	1	
6	Screw	-	-	-	- -	GU98622314	4	
7	Washer 6,4x10x0,7	-	-	-	- -	GU14217901	6	
8	Plate	-	-	-	- -	GU19235800	1	
9	Screw	-	-	-	- -	GU98622314	2	
10	Gasket	-	-	-	- -	GU19200320	1	
11	Sensor	-	-	-	- -	GU19207220	1	
12	Gasket 8,25x15x1	-	-	-	- -	GU12154200	1	
13	Screw M12x1,25	-	-	-	- -	GU19237800	1	
14	Low nut M12x1,25	-	-	-	- -	GU92602512	1	
15	Gasket	-	-	-	- -	GU19201120	1	
16	Bush 6,6x9x13	-	-	-	- -	GU19002020	4	
17	Transmission cage	-	-	-	- -	GU19200222	1	
18	Screw M6X30	-	-	-	- -	GU98620330	7	
19	Screw M8X35	-	-	-	- -	GU98620435	4	
20	Pawl	-	-	-	- -	GU55234700	1	
21	Lever return spring	-	-	-	- -	GU94321067	1	
22	Breather plug	-	-	-	- -	GU19206501	1	
23	Gasket	-	-	-	- -	GU10528900	2	
24	Oil plug	-	-	-	- -	GU12022600	1	
25	O-ring 20,24X2,62	-	-	-	- -	GU90706203	1	
26	Oil level plug	-	-	-	- -	GU95980214	1	
27	Oil bulhead	-	-	-	- -	GU19208220	1	
28	Ball bearing 20x42x12	-	-	-	- -	GU92201120	1	



V 35 FLORIDA 350 1986-1990	GU059	00	TAB N.	01
ACCESSORIES				

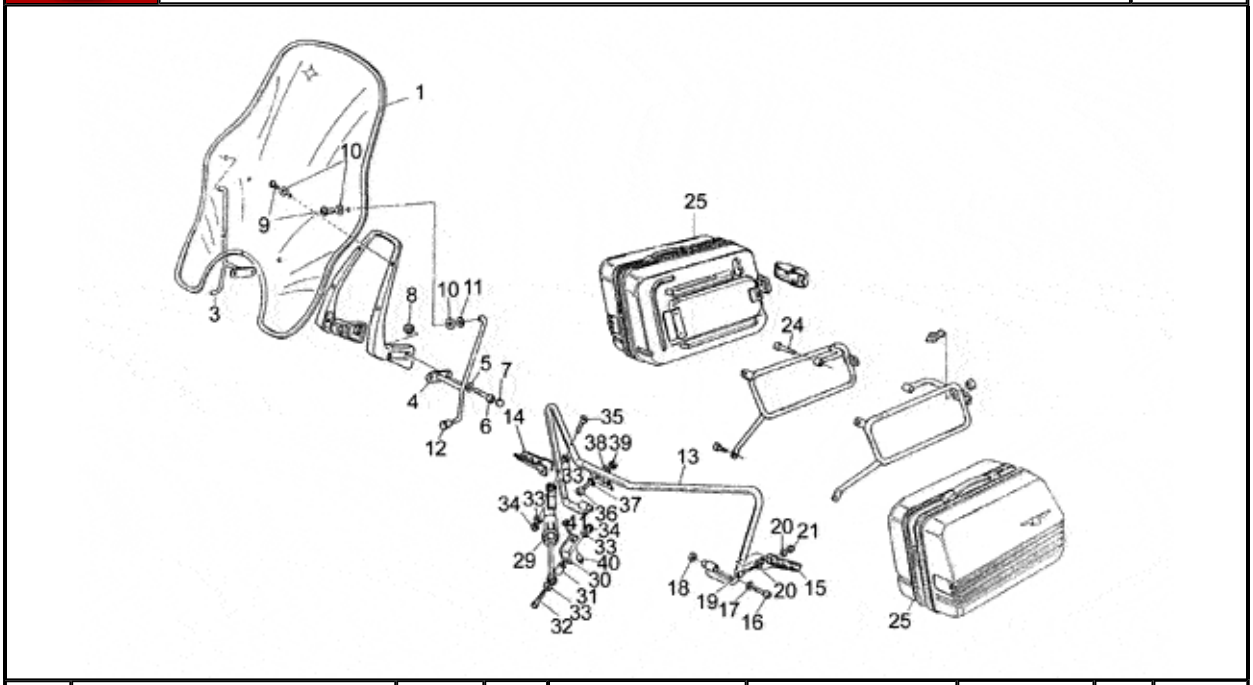

Pos.	Description	Year	I_M_	Country	Version	Code	Q.ty	P.Cod.
1	Windscreen	-	-	-	-	GU23577270	1	
3	RH clamp	-	-	-	-	GU23506810	1	
4	LH clamp	-	-	-	-	GU23506910	1	
5	Washer 10,2x18x2	-	-	-	-	GU95004210	2	
6	Screw	-	-	-	-	GU98622530	2	
7	Plug	-	-	-	-	GU23943510	2	
8	Nut M10x1,5	-	-	-	-	GU92630510	2	
9	Screw	-	-	-	-	GU98326016	6	
10	Rubber spacer	-	-	-	-	GU93110060	12	
11	Washer 6,25X11X1	-	-	-	-	GU95100119	2	
12	Rubber spacer	-	-	-	-	GU23576910	2	
13	Front bumper	-	-	-	-	GU23450210	1	
14	RH footrest	-	-	-	-	GU23447610	1	
15	LH footrest	-	-	-	-	GU23447710	1	
16	Screw	-	-	-	-	GU98622545	2	
17	Washer	-	-	-	-	GU95120105	2	
18	Nut	-	-	-	-	GU92602210	2	
19	Hex socket screw M6X50	-	-	-	-	GU98620350	2	
20	Washer 6,15x11x0,8	-	-	-	-	GU95004206	4	
21	Nut M6x1	-	-	-	-	GU92630106	2	
24	Screw	-	-	-	-	GU98820445	2	
25	Cases kit GIVI	-	-	-	-	GU23999272	1	
29	Steering shock absorber	-	-	-	-	GU17530260	1	
30	Clamp	-	-	-	-	GU23531860	1	
31	Spacer	-	-	-	-	GU23451170	1	
32	Screw	-	-	-	-	GU98620340	1	
33	Washer	-	-	-	-	GU95000206	4	
34	Nut M6x1	-	-	-	-	GU92630106	2	
35	Screw M6X45	-	-	-	-	GU98620345	1	
36	Hex socket screw M8X25	-	-	-	-	GU98622425	2	
37	Spring washer	-	-	-	-	GU95021108	2	
38	Washer	-	-	-	-	GU95000208	2	
39	Nut M8X1,25	-	-	-	-	GU92602208	2	
40	Spacer	-	-	-	-	GU91181016	1	
41	Screw	-	-	-	-	GU98072570	1	

V 35 FLORIDA 350 1986-1990	GU059	00	TAB N.	02
BODY				

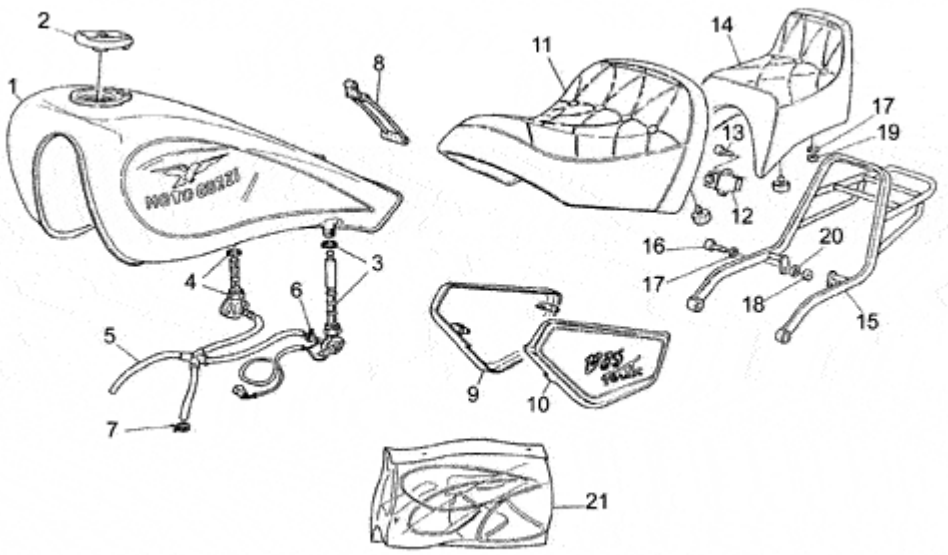

Pos.	Description	Year	I_M_	Country	Version	Code	Q.ty	P.Cod.
1	Fuel tank	-	-	-	- gr	GU311002601	1	
2	Fuel filler cap	-	-	-	- -	GU30103960	1	
3	LH fuel cock	-	-	-	- -	GU23105370	1	
4	RH fuel cock	-	-	-	- -	GU23105470	1	
5	Fuel pipe union cap	-	-	-	- -	GU13934600	1	
6	Hose clamp	-	-	-	- -	GU61108400	2	
7	Hose clamp D9	-	-	-	- -	GU61108500	2	
8	Tie rod	-	-	-	- -	GU19102750	1	
9	RH side cover blank	-	-	-	- gr	GU234762101	1	
10	LH side cover blank	-	-	-	- gr	GU314763621	1	
11	Driver saddle	-	-	-	- -	GU23460510	1	
12	Lock	-	-	-	- -	GU27468720	1	
13	Screw	-	-	-	- -	GU98622214	2	
14	Rear saddle	-	-	-	- -	GU23464010	1	
15	Luggage rack	-	-	-	- -	GU23466611	1	
16	Screw	-	-	-	- -	GU98822422	2	
17	Spring washer 8x15x0,3	-	-	-	- -	GU61270300	4	
18	Nut	-	-	-	- -	GU92630508	2	
19	Nut M8X1,25	-	-	-	- -	GU92602208	2	
20	Washer	-	-	-	- -	GU95000208	2	
21	Decal set	-	-	-	- -	GU23923310	1	

V 35 FLORIDA 350 1986-1990	GU059	00	TAB N.	03
BEVEL GEAR				

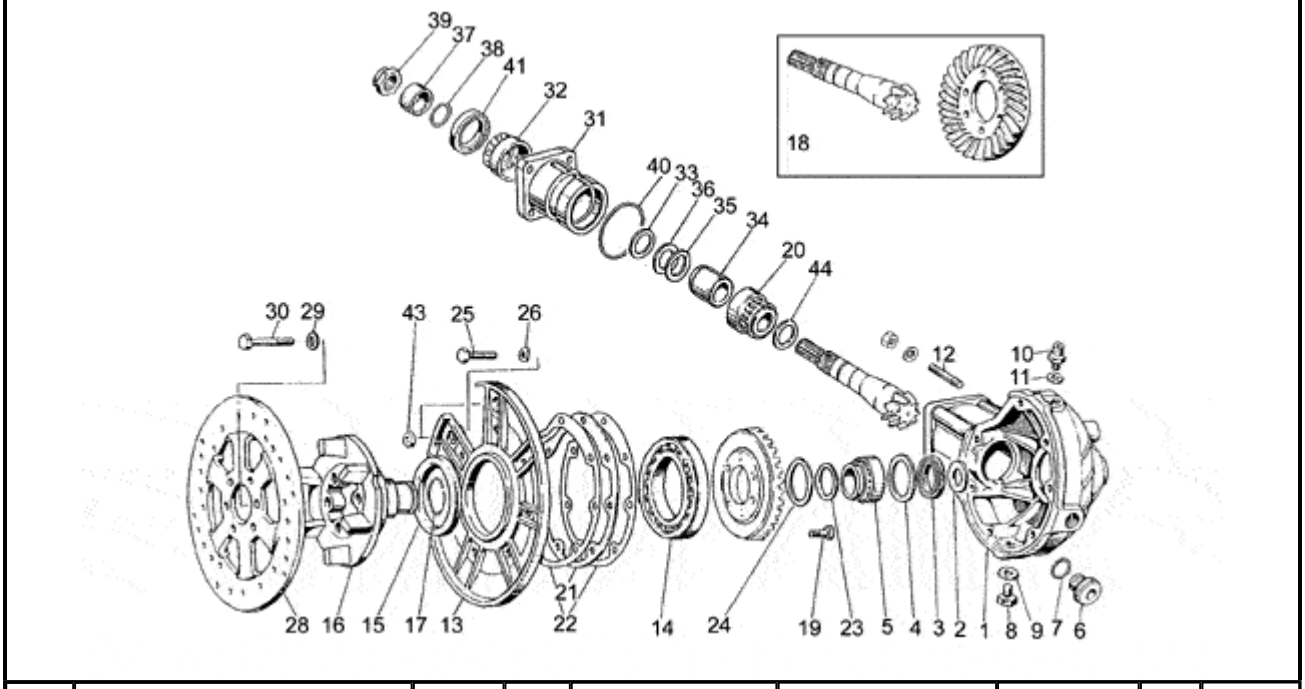

Pos.	Description	Year	I_M_	Country	Version	Code	Q.ty	P.Cod.
1	Transmission cover	-	-	-	- -	GU31350331	1	
2	Clearance washer	-	-	-	- -	GU19351900	1	
3	Gasket ring 35x47x7	-	-	-	- -	GU90403547	1	
4	Clearance washer	-	-	-	- -	GU19351100	1	
5	Roller bearing 35x50x17	-	-	-	- -	GU92252235	1	
6	Oil filler plug	-	-	-	- -	GU31351200	1	
7	O-ring 20,24X2,62	-	-	-	- -	GU90706203	1	
8	Plug	-	-	-	- -	GU95980611	1	
9	Gasket	-	-	-	- -	GU10528900	1	
10	Breather plug	-	-	-	- -	GU31206500	1	
11	Gasket	-	-	-	- -	GU10528900	1	
12	Stud bolt	-	-	-	- -	GU96508055	4	
13	Cover	-	-	-	- -	GU19350421	1	
14	Ball bearing 70x110x13	-	-	-	- -	GU92201070	1	
15	Gasket ring 75x90x8	-	-	-	- -	GU90407590	1	
16	Pin	-	-	-	- -	GU19351401	1	
17	Stop ring	-	-	-	- -	GU90353030	1	
18	Bevel gear Z=8/31	-	-	-	- -	GU20354621	1	
19	Screw	-	-	-	- -	GU19356320	6	
20	Tap.roller bearing	-	-	-	- -	GU92249223	1	
21	Spacer 1,2 mm	-	-	-	- -	GU19355408	1	
	Spacer 1,6 mm	-	-	-	- -	GU19355413	1	
	Spacer 1,5 mm	-	-	-	- -	GU19355412	1	
	Spacer 1,3 mm	-	-	-	- -	GU19355410	1	
	Spacer 1,1 mm	-	-	-	- -	GU19355406	1	
	Spacer 1 mm	-	-	-	- -	GU19355404	1	
	Spacer 0,9 mm	-	-	-	- -	GU19355402	1	
	Spacer 0,8 mm	-	-	-	- -	GU19355400	1	
	Spacer 1,4 mm	-	-	-	- -	GU19355411	1	
22	Thrust washer	-	-	-	- -	GU19352300	2	
23	Thrust washer	-	-	-	- -	GU19352300	1	
24	Thrust washer	-	-	-	- -	GU19353500	1	
25	Screw M8X25	-	-	-	- -	GU19357660	7	

26	Spring washer 8x15x0,3	-	-	-	-	-	GU61270300	7
28	Rear brake disc	-	-	-	-	-	GU19635736	1
29	Washer 8,4X13X0,8	-	-	-	-	-	GU14615901	6
30	Screw	-	-	-	-	-	GU98054418	6
31	Bearing casing	-	-	-	-	-	GU19352401	1
32	Roller bearing 20x47x14	-	-	-	-	-	GU92249220	1
33	Spacer 1,2 mm	-	-	-	-	-	GU19355302	4
	Spacer 1,9 mm	-	-	-	-	-	GU19355309	4
	Spacer 1,8 mm	-	-	-	-	-	GU19355308	4
	Spacer 1,7 mm	-	-	-	-	-	GU19355307	4
	Spacer 1,6 mm	-	-	-	-	-	GU19355306	4
	Spacer 1,5 mm	-	-	-	-	-	GU19355305	4
	Spacer 1,3 mm	-	-	-	-	-	GU19355303	4
	Spacer 1,1 mm	-	-	-	-	-	GU19355301	4
	Spacer 1 mm	-	-	-	-	-	GU19355300	4
	Spacer 1,4 mm	-	-	-	-	-	GU19355304	4
34	Spacer	-	-	-	-	-	GU19355121	1
35	Shim 0,1 mm	-	-	-	-	-	GU19355200	2
36	Shim 0,15 mm	-	-	-	-	-	GU19355202	11
37	Spacer	-	-	-	-	-	GU19356801	1
38	Gasket ring 18,77X1,78	-	-	-	-	-	GU90706188	1
39	Nut	-	-	-	-	-	GU19356700	1
40	Gasket ring	-	-	-	-	-	GU90706552	1
41	Gasket ring	-	-	-	-	-	GU90403247	1
43	Nut M8X1,25	-	-	-	-	-	GU92602208	2
44	Spacer 1 mm	-	-	-	-	-	GU19355320	2
	Spacer 1,8 mm	-	-	-	-	-	GU19355328	2
	Spacer 1,7 mm	-	-	-	-	-	GU19355327	2
	Spacer 1,6 mm	-	-	-	-	-	GU19355326	2
	Spacer 1,5 mm	-	-	-	-	-	GU19355325	2
	Spacer 1,4 mm	-	-	-	-	-	GU19355324	2
	Spacer 1,3 mm	-	-	-	-	-	GU19355323	2
	Spacer 1,1 mm	-	-	-	-	-	GU19355321	2
	Spacer 1,9 mm	-	-	-	-	-	GU19355329	2
	Spacer 1,2 mm	-	-	-	-	-	GU19355322	2

V 35 FLORIDA 350 1986-1990	GU059	00	TAB N.	04
ELECTRICAL SYSTEMS				

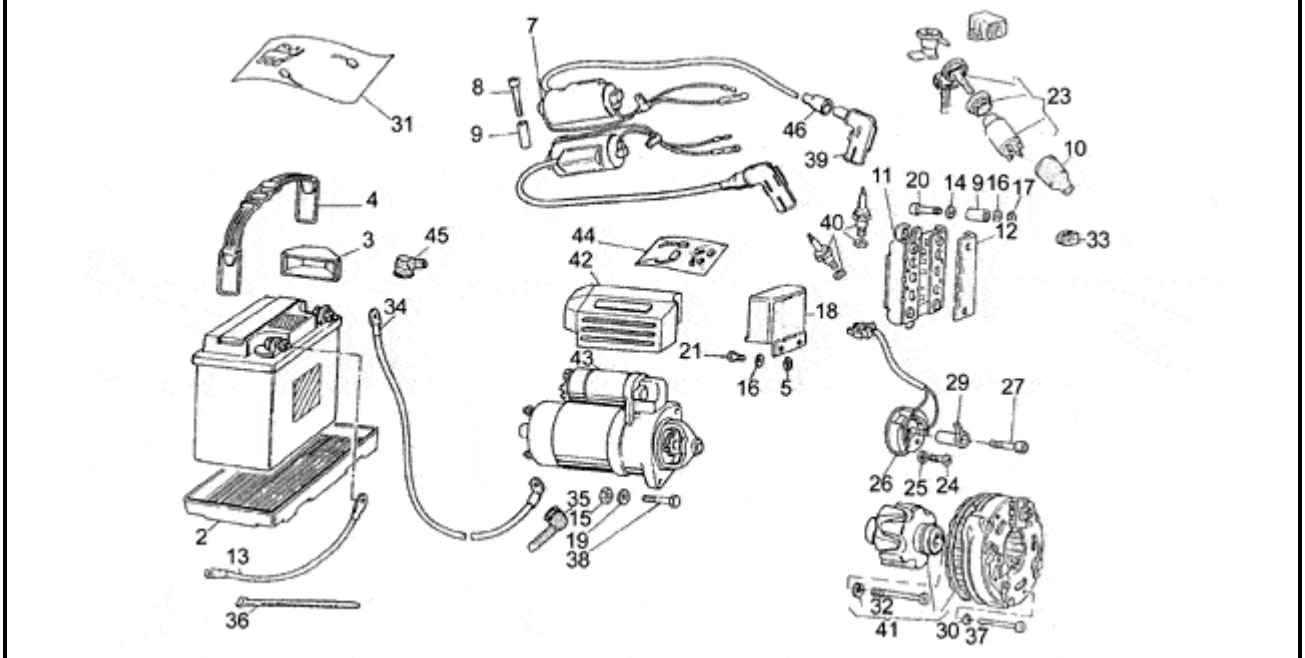

Pos.	Description	Year	I_M_	Country	Version	Code	Q.ty	P.Cod.
2	Float chamber	-	-	-	-	GU14707000	1	
3	Accumulator fixing wedge	-	-	-	-	GU14705350	1	
4	Clamp	-	-	-	-	GU19704800	1	
5	Spacer	-	-	-	-	GU91180605	2	
7	HT coil	-	-	-	-	GU31716560	2	
8	Hex socket screw M5X45	-	-	-	-	GU98620245	4	
9	Spacer	-	-	-	-	GU91180627	8	
10	Ring nut	-	-	-	-	GU19741336	1	
11	Bosch rectifier	-	-	-	-	GU17704300	1	
12	Cover	-	-	-	-	GU61704200	1	
13	Ground-battery lead	-	-	-	-	GU19748400	1	
14	Washer 6,4x12x1,2	-	-	-	-	GU95100141	2	
15	Nut M8X1,25	-	-	-	-	GU92602208	1	
16	Spring washer 5,3X10X0,5	-	-	-	-	GU95129100	6	
17	Nut	-	-	-	-	GU92602205	4	
18	Voltage regulator BOSCH	-	-	-	-	GU29703800	1	
19	Washer	-	-	-	-	GU95004208	2	
20	Screw	-	-	-	-	GU98052245	4	
21	Screw	-	-	-	-	GU98054214	2	
23	Main switch	-	-	-	-	GU31735360	1	
24	Screw	-	-	-	-	GU98290512	2	
25	Washer	-	-	-	-	GU95000205	2	
26	Phase/revolution sensor	-	-	-	-	GU29722270	1	
27	Hex socket screw M6X18	-	-	-	-	GU98622318	1	
29	Rotor	-	-	-	-	GU27721037	1	
30	Notched washer	-	-	-	-	GU95021105	3	
31	Repairing kit	-	-	-	-	GU17712454	1	
32	Screw	-	-	-	-	GU14712459	1	
33	Rubber spacer	-	-	-	-	GU19007700	1	
34	Wire	-	-	-	-	GU19748000	1	
35	Cap	-	-	-	-	GU19707100	2	
36	Hose clamp 3,6x20,6	-	-	-	-	GU14609650	20	
37	Hex socket screw M5X45	-	-	-	-	GU98620245	3	

Revente Interdite - Revendita Vietata - Resaling Forbiden - Wiederverkauf Verboten

38	Hex screw M8X35	-	-	-	-	-	GU98052435	2
39	Sparkplug cap	-	-	-	-	-	GU14717400	2
40	Spark plug NGK B8ES	-	-	-	-	-	GU31717060	2
41	Bosch alternator	-	-	-	-	-	GU17712400	1
42	Protection	-	-	-	-	-	GU19733350	1
43	Starter motor Valeo	-	-	-	-	-	GU30730711	1
44	Starter motor revision kit	-	-	-	-	-	GU14730570	1
45	Cap	-	-	-	-	-	GU23707100	1
46	Cap	-	-	-	-	-	GU14717600	2

Revente Interdite - Revendita Vietata - Resaling Forbiden - Wiederverkauf Verboten

V 35 FLORIDA 350 1986-1990	GU059	00	TAB N.	05
HEADLIGHT				

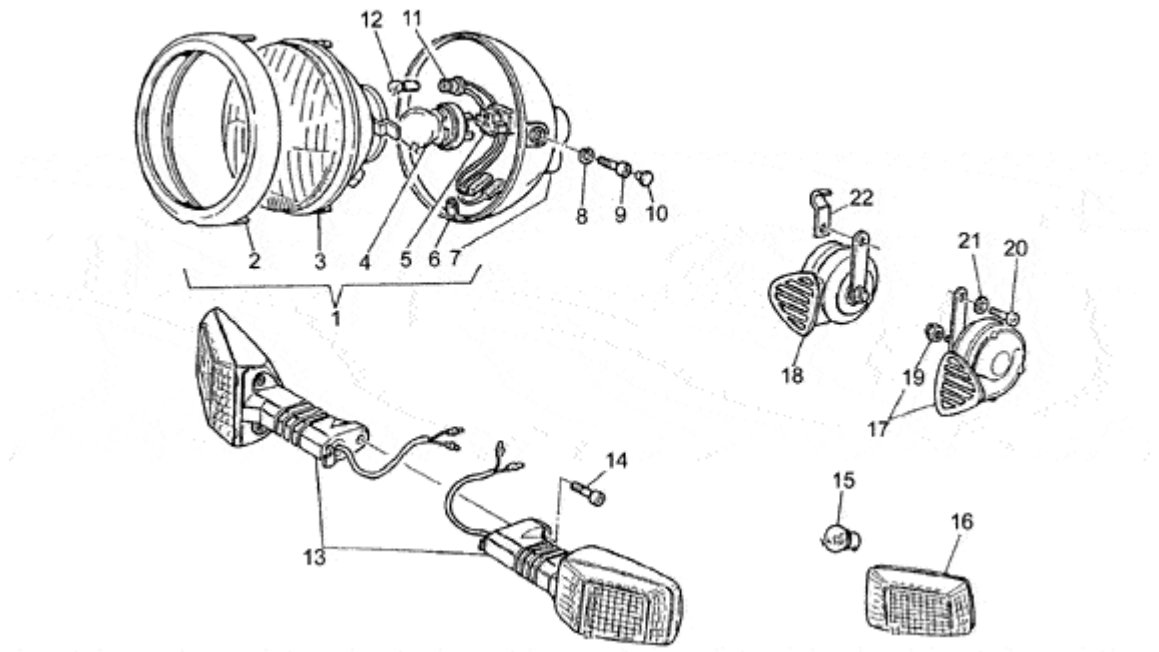

Pos.	Description	Year	I_M_	Country	Version	Code	Q.ty	P.Cod.
1	Headlight	-	-	-	- -	GU28740533	1	
2	Light frame	-	-	-	- -	GU19740454	1	
3	Optical group	-	-	-	- -	GU18740435	1	
4	Lamp 12V 45/40W	-	-	-	- -	GU93450231	1	
5	Lampholder	-	-	-	- -	GU14756255	1	
6	Headlight body	-	-	-	- -	GU23740418	1	
7	Rear cap plug	-	-	-	- -	GU19740404	1	
8	Washer 10,2x18x2	-	-	-	- -	GU95004210	2	
9	Screw	-	-	-	- -	GU98622530	2	
10	Plug	-	-	-	- -	GU23943510	2	
11	Lampholder	-	-	-	- -	GU17740405	1	
12	Lamp 12V-4W	-	-	-	- -	GU93450119	1	
13	Turn indicator	-	-	-	- -	GU23750670	2	
14	Screw	-	-	-	- -	GU98832320	2	
15	Lamp 12V-10W	-	-	-	- -	GU93450127	2	
16	Turn indicator lens	-	-	-	- -	GU23753710	2	
17	Horn	-	-	-	- -	GU29743752	1	
18	Horn	-	-	-	- -	GU29743753	1	
19	Nut	-	-	-	- -	GU92602206	2	
20	Screw	-	-	-	- -	GU98822314	2	
21	Washer	-	-	-	- -	GU95000206	2	
22	U-bolt	-	-	-	- -	GU93301313	1	

V 35 FLORIDA 350 1986-1990	GU059	00	TAB N.	06

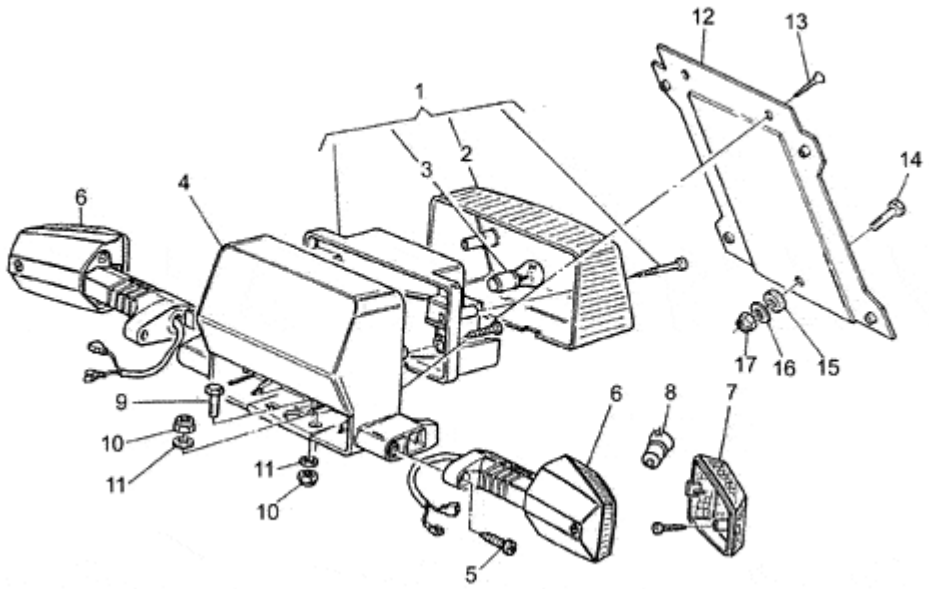

Pos.	Description	Year	I_M_	Country	Version	Code	Q.ty	P.Cod.
1	Taillight	-	-	-	- -	GU23740910	1	
2	Taillight lens	-	-	-	- -	GU23741710	1	
3	Lamp 12V/5-21W	-	-	-	- -	GU93450224	1	
4	Support	-	-	-	- -	GU23758510	1	
5	Self-tap screw	-	-	-	- -	GU99210520	2	
6	Turn indicator	-	-	-	- -	GU23750670	2	
7	Turn indicator lens	-	-	-	- -	GU23753710	2	
8	Lamp 12V-10W	-	-	-	- -	GU93450127	2	
9	Screw	-	-	-	- -	GU98054314	1	
10	Nut M6x1	-	-	-	- -	GU92630106	3	
11	Washer	-	-	-	- -	GU95000206	3	
12	Plate holder support	-	-	-	- -	GU23474610	1	
13	Self-tap screw	-	-	-	- -	GU99210320	2	
14	Hex screw M6X16	-	-	-	- -	GU98054316	1	
15	Rubber spacer	-	-	-	- -	GU93110060	1	
16	Washer 6,2X18X1	-	-	-	- -	GU95100118	1	
17	Nut M6x1	-	-	-	- -	GU92630106	1	

V 35 FLORIDA 350 1986-1990	GU059	00	TAB N.	07
FRONT FORK				

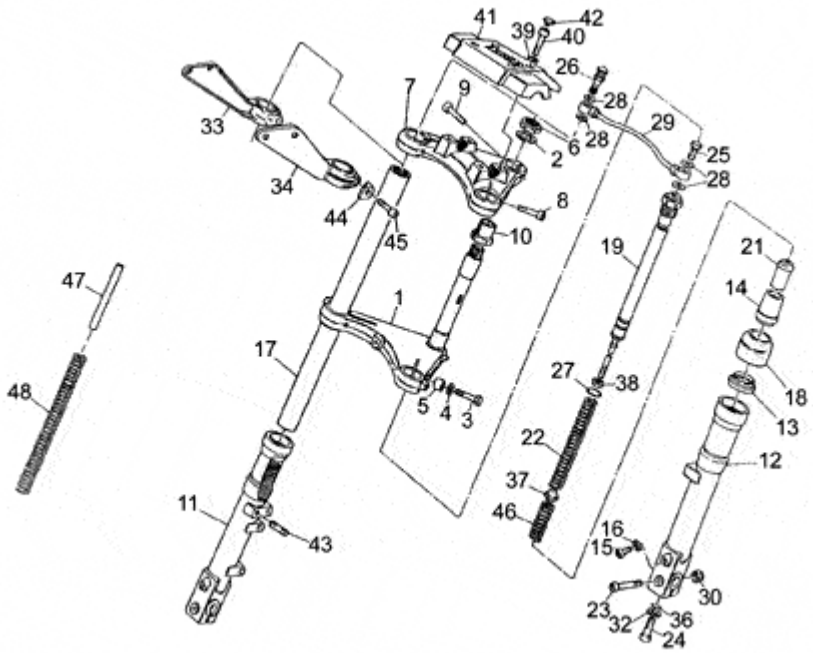

Pos.	Description	Year	I_M_	Country	Version	Code	Q.ty	P.Cod.
1	Lower plate	-	-	-	- -	GU23494010	1	
2	Stem plug washer	-	-	-	- -	GU18513560	1	
3	Hex screw M10X55	-	-	-	- -	GU98072555	2	
4	Washer	-	-	-	- -	GU95007210	2	
5	Spacer	-	-	-	- -	GU91181016	2	
6	Plug	-	-	-	- -	GU18513460	1	
7	Upper plate	-	-	-	- -	GU27493135	1	
8	Screw	-	-	-	- -	GU98610540	5	
9	Screw	-	-	-	- -	GU98612535	1	
10	Steering lock bush	-	-	-	- -	GU18516660	1	
11	RH sleeve	-	-	-	- -	GU23522510	1	
12	LH sleeve	-	-	-	- -	GU23522610	1	
13	Oil seal	-	-	-	- -	GU90403449	2	
14	Bush	-	-	-	- -	GU27527620	2	
15	Hex socket screw M6X25	-	-	-	- -	GU98622325	2	
16	Washer 6,25x10x1,5	-	-	-	- -	GU95100116	4	
17	Sleeve	-	-	-	- -	GU23525410	2	
18	Dust cover	-	-	-	- -	GU14524500	2	
19	Shock absorber	-	-	-	- -	GU23526410	2	
21	End stop	-	-	-	- -	GU27527520	2	
22	Spring	-	-	-	- -	GU23526910	2	
23	Screw M10X40	-	-	-	- -	GU98620540	2	
24	Screw 25 mm	-	-	-	- -	GU98622525	2	
25	Bored screw	-	-	-	- -	GU28556450	1	
26	Air valve	-	-	-	- -	GU28556250	1	
27	Gasket ring	-	-	-	- -	GU90706266	2	
28	Copper washer	-	-	-	- -	GU28556350	4	
29	Front shock absorber tube	-	-	-	- -	GU19529660	1	
30	Nut	-	-	-	- -	GU92781100	2	
32	Flat washer	-	-	-	- -	GU27499120	2	
33	RH support	-	-	-	- -	GU23496110	1	
34	LH support	-	-	-	- -	GU23496210	1	
36	O-ring 9x2	-	-	-	- -	GU90706094	2	

Revente Interdite - Revendita Vietata - Resaling Forbiden - Wiederverkauf Verboten

37	Spacer	-	-	-	-	-	GU23527910	2
38	Nut	-	-	-	-	-	GU92602308	2
39	Washer 8,4X13X0,8	-	-	-	-	-	GU14615901	4
40	Screw M8X35	-	-	-	-	-	GU98620435	4
41	Handlebar fixing plate	-	-	-	-	-	GU23500210	1
42	Plug	-	-	-	-	-	GU23943410	6
43	Stud bolt	-	-	-	-	-	GU96508021	4
44	Spacer	-	-	-	-	-	GU23497910	2
45	Hex socket screw M8X25	-	-	-	-	-	GU98622425	2
46	Return spring	-	-	-	-	-	GU23526610	2
47	Anti-rubbing pipe	-	-	-	-	-	GU27526320	2
48	Spring	-	-	-	-	-	GU27526685	2

Revente Interdite - Revendita Vietata - Resaling Forbiden - Wiederverkauf Verboten

V 35 FLORIDA 350 1986-1990	GU059	00	TAB N.	08
SWING ARM				

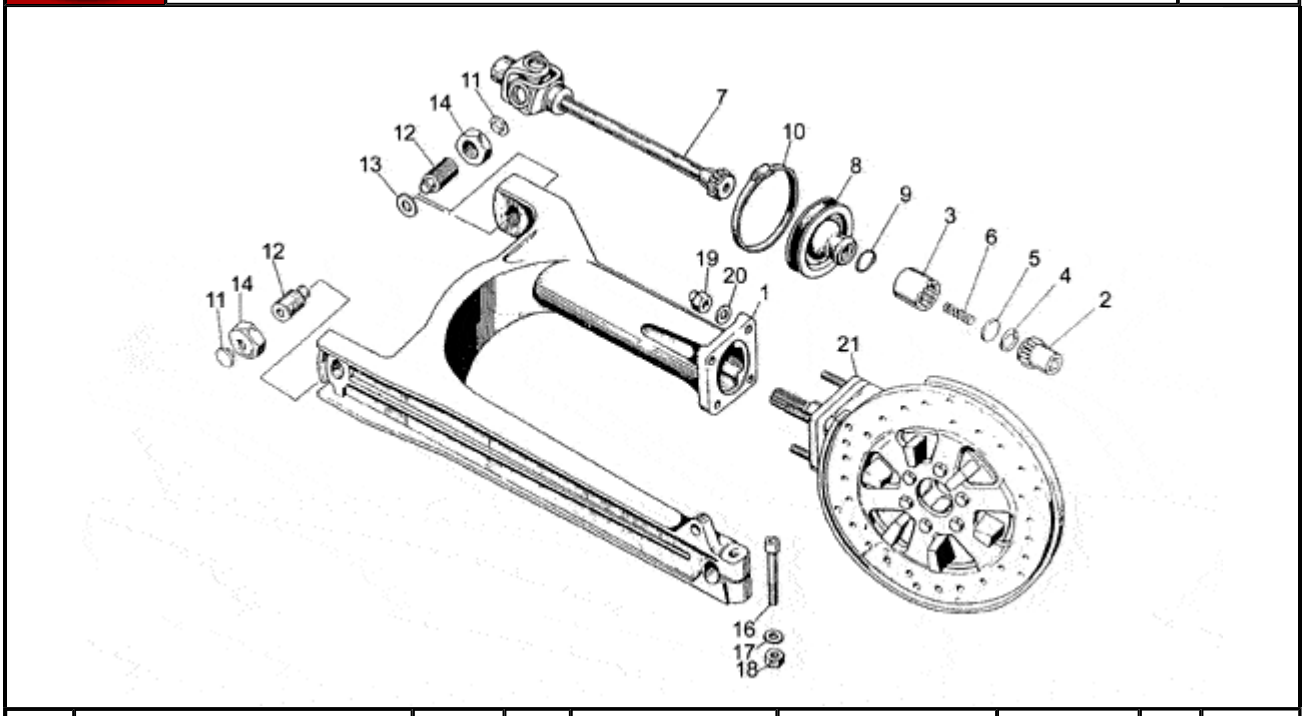

Pos.	Description	Year	I_M_	Country	Version	Code	Q.ty	P.Cod.
1	Swing arm	-	-	-	- -	GU23540210	1	
2	Hose	-	-	-	- -	GU19327701	1	
3	Hose	-	-	-	- -	GU19328801	1	
4	Circlip	-	-	-	- -	GU90272023	1	
5	Disc	-	-	-	- -	GU19327601	1	
6	Spring	-	-	-	- -	GU94321099	1	
7	Coupling	-	-	-	- -	GU23328081	1	
8	Protection collar	-	-	-	- -	GU23548080	1	
9	Spring	-	-	-	- -	GU23548180	1	
10	Hose clamp	-	-	-	- -	GU93305074	1	
11	Plug	-	-	-	- -	GU93180105	2	
12	Pin	-	-	-	- -	GU19547000	2	
13	Spacer	-	-	-	- -	GU35214300	1	
14	Nut	-	-	-	- -	GU14547800	2	
16	Screw	-	-	-	- -	GU98820545	1	
17	Washer 10,2x18x2	-	-	-	- -	GU95004210	1	
18	Nut	-	-	-	- -	GU92602210	1	
19	Nut	-	-	-	- -	GU92781081	4	
20	Washer 8,4X13X0,8	-	-	-	- -	GU14615901	4	
21	Transmission complete	-	-	-	- -	GU31350200	1	

Revente Interdite - Revendita Vietata - Resaling Forbiden - Wiederverkauf Verboten

V 35 FLORIDA 350 1986-1990	GU059	00	TAB N.	09
ELECTRICAL SYSTEM				

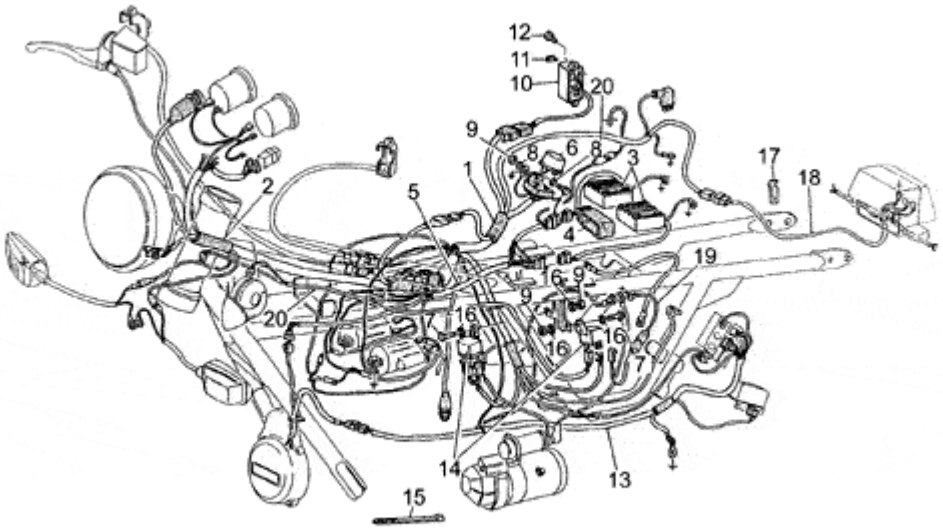

Pos.	Description	Year	I_M_	Country	Version	Code	Q.ty	P.Cod.
1	Electrical system	-	-	-	- -	GU23747170	1	
2	Turn indicator switch	-	-	-	- -	GU28745760	1	
3	Electronic control unit	-	-	-	- -	GU23721494	2	
4	Flexible support	-	-	-	- -	GU27723835	2	
5	H.T. wiring	-	-	-	- -	GU31722140	1	
6	Flasher unit	-	-	-	- -	GU17750520	1	
7	Screw	-	-	-	- -	GU98054212	3	
8	Washer	-	-	-	- -	GU95000205	2	
9	Nut	-	-	-	- -	GU92602205	3	
10	Rubber fuse box	-	-	-	- -	GU23743010	1	
11	Fuse 15A	-	-	-	- -	GU28742560	4	
12	Screw	-	-	-	- -	GU98620212	2	
13	Alternator-regulator wiring	-	-	-	- -	GU19725820	1	
14	Starter relay	-	-	-	- -	GU19732500	2	
15	Hose clamp 3,6x20,6	-	-	-	- -	GU14609650	1	
	Hose clamp	-	-	-	- -	GU61609630	1	
16	Washer 5,25x14x1,5	-	-	-	- -	GU95100059	4	
17	U-bolt	-	-	-	- -	GU93301315	1	
18	Taillight wiring harn.	-	-	-	- -	GU23747310	1	
19	Wire	-	-	-	- -	GU23748210	1	
20	Capacitor	-	-	-	- -	GU27710435	1	
	Wire	-	-	-	- -	GU23748310	1	

Revente Interdite - Revendita Vietata - Resaling Forbiden - Wiederverkauf Verboten

V 35 FLORIDA 350 1986-1990	GU059	00	TAB N.	10
RH FRONT BRAKE SYSTEM				

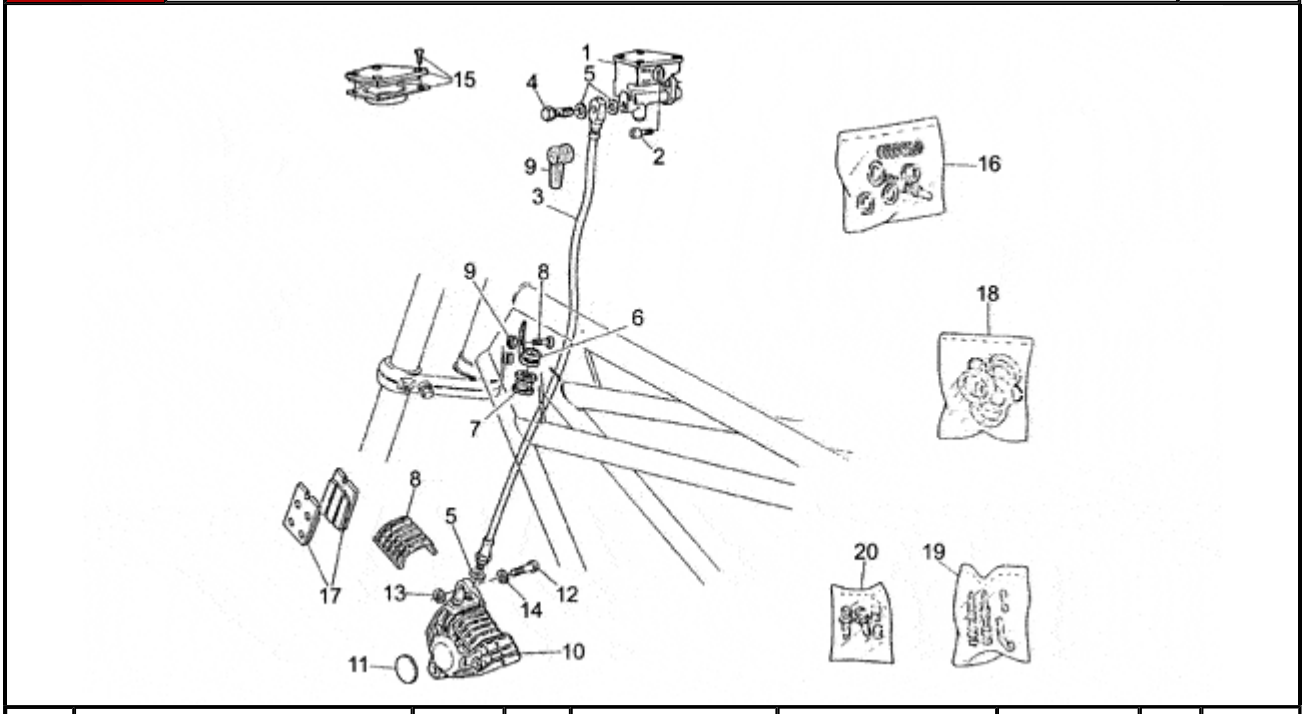

Pos.	Description	Year	I_M_	Country	Version		Code	Q.ty	P.Cod.
1	Front master cilinder	-	-	-	-	-	GU29660250	1	
2	Screw	-	-	-	-	-	GU98812216	2	
3	Front brake line	-	-	-	-	-	GU23657110	1	
4	Oil pipe screw *	-	-	-	-	-	GU95990028	1	
5	Gasket	-	-	-	-	-	GU25656100	3	
6	Hose clamp	-	-	-	-	-	GU17658360	1	
7	Ring	-	-	-	-	-	GU17658260	1	
8	Brake caliper cover GRIMECA	-	-	-	29895C	-	GU31654765	1	
	Brake caliper cover BREMBO	-	-	-	-	-	GU39654700	1	
9	Cap	-	-	-	-	-	GU39663801	1	
10	RH front brake caliper Grimeca	-	-	-	29895C	-	GU31652365	1	
11	Brake caliper decal	-	-	-	-	-	GU19652700	1	
12	Screw	-	-	-	-	-	GU98622422	2	
13	Washer 8,5X18X0,8	-	-	-	-	-	GU95100251	4	
	Washer 8,5X18X0,5	-	-	-	-	-	GU95100250	4	
14	Spring washer 8x15x0,3	-	-	-	-	-	GU61270300	2	
15	Cover	-	-	-	-	-	GU23661110	1	
16	Brake mast.cyl rev. kit	-	-	-	-	-	GU23659310	1	
17	Pads pair GRIMECA	-	-	-	29895C	-	GU31654665	2	
	Pads pair BREMBO	-	-	-	-	-	GU27654610	1	
18	Brake caliper rev. kit GRIMECA	-	-	-	29895C	-	GU66659031	1	
	Brake caliper rev. kit BREMBO	-	-	-	-	-	GU39659000	1	
19	Pins+spring GRIMECA	-	-	-	29895C	-	GU31659165	2	
	Pins+spring BREMBO	-	-	-	-	-	GU39659100	1	
20	Bleeder+cap BREMBO D.6	-	-	-	-	-	GU65659200	1	
	Bleeder+cap GRIMECA	-	-	-	29895C	-	GU31659265	1	

V 35 FLORIDA 350 1986-1990	GU059	00	TAB N.	11
FRONT LH/REAR BRAKE SYSTEM				

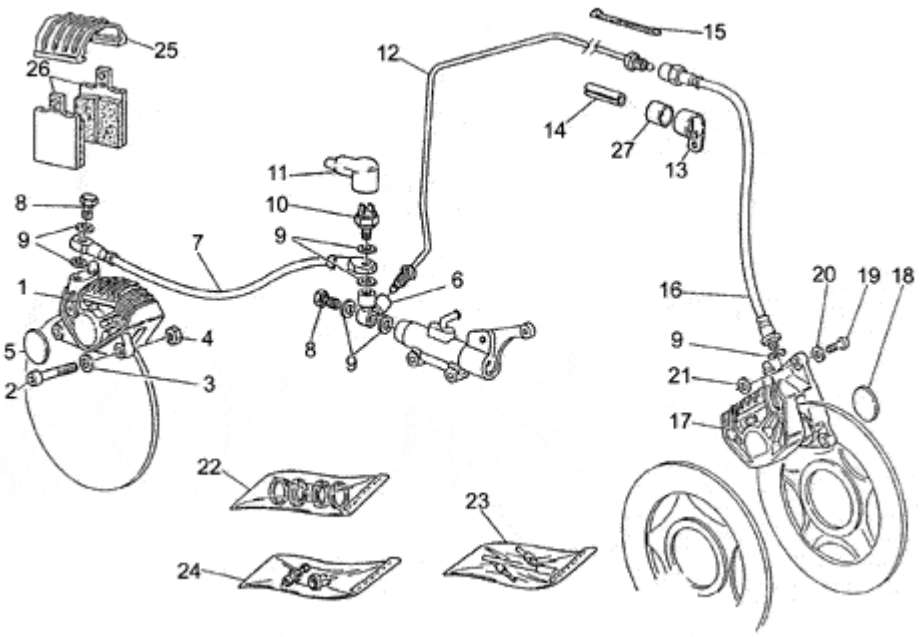

Pos.	Description	Year	I_M_	Country	Version		Code	Q.ty	P.Cod.
1	Rear brake caliper	-	-	-	-	-	GU23653011	1	
2	Screw	-	-	-	-	-	GU98622422	2	
3	Spring washer 8x15x0,3	-	-	-	-	-	GU61270300	2	
4	Nut M8X1,25	-	-	-	-	-	GU92602208	2	
5	Rear brake cal. decal	-	-	-	-	-	GU19654900	1	
6	Connection	-	-	-	-	-	GU19668000	1	
7	Pipe	-	-	-	-	-	GU17658550	1	
8	Oil pipe screw *	-	-	-	-	-	GU95990028	2	
9	Gasket	-	-	-	-	-	GU25656100	7	
10	Brake light switch	-	-	-	-	-	GU14657050	1	
11	Cap	-	-	-	-	-	GU12735100	1	
12	Pipe	-	-	-	-	-	GU19658735	1	
13	Hose clamp	-	-	-	-	-	GU62436500	1	
14	Piston ring	-	-	-	-	-	GU17659650	3	
15	Hose clamp 3,6x20,6	-	-	-	-	-	GU14609650	1	
16	Pipe	-	-	-	-	-	GU23658810	1	
17	LH front brake caliper Grimeca	-	-	-	29895C	-	GU31652265	1	
18	Brake caliper decal	-	-	-	-	-	GU19652700	1	
19	Screw	-	-	-	-	-	GU98622422	2	
20	Spring washer 8x15x0,3	-	-	-	-	-	GU61270300	2	
21	Washer 8,5X18X0,5	-	-	-	-	-	GU95100250	4	
	Washer 8,5X18X0,8	-	-	-	-	-	GU95100251	4	
22	Brake caliper rev. kit BREMBO	-	-	-	-	-	GU39659000	2	
	Brake caliper rev. kit GRIMECA	-	-	-	29895C	-	GU66659031	1	
23	Pins+spring GRIMECA	-	-	-	29895C	-	GU31659165	2	
	Pins+spring BREMBO	-	-	-	-	-	GU39659100	2	
24	Bleeder+cap GRIMECA	-	-	-	29895C	-	GU31659265	1	
	Bleeder+cap BREMBO D.6	-	-	-	-	-	GU65659200	2	
25	Brake caliper cover GRIMECA	-	-	-	29895C	-	GU31654765	1	
	Brake caliper cover BREMBO	-	-	-	-	-	GU39654700	2	
26	Pads pair GRIMECA	-	-	-	29895C	-	GU31654665	2	
	Pads pair BREMBO	-	-	-	-	-	GU27654610	1	
27	Snap ring	-	-	-	-	-	GU90716142	1	

V 35 FLORIDA 350 1986-1990	GU059	00	TAB N.	12
HANDLEBAR				

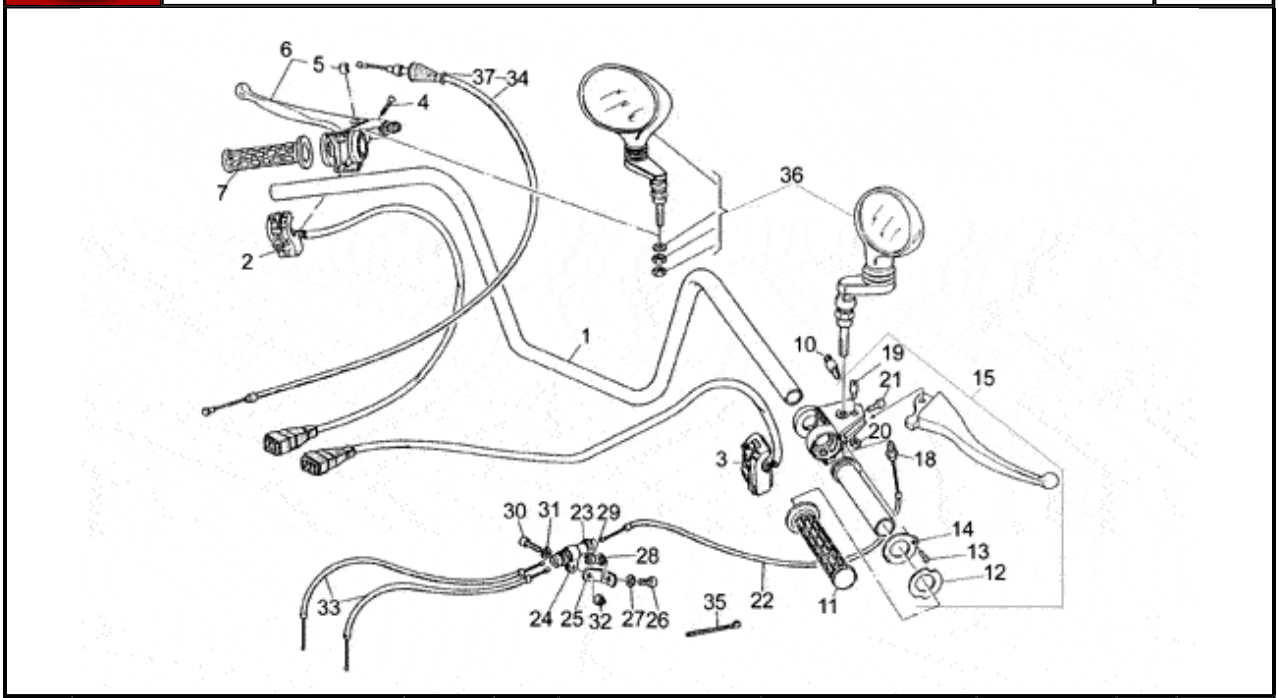

Pos.	Description	Year	I_M_	Country	Version	Code	Q.ty	P.Cod.
1	Handlebar	-	-	-	-	GU29600351	1	
2	LH lights selector	-	-	-	-	GU23738070	1	
3	RH lights selector	-	-	-	-	GU23750370	1	
4	Screw	-	-	-	-	GU98260425	2	
5	Bush	-	-	-	-	GU29608750	1	
6	Clutch lever	-	-	-	-	GU29605550	1	
7	LH hand grip	-	-	-	-	GU29603050	1	
10	Brake light switch	-	-	-	-	GU39741101	1	
11	RH hand grip	-	-	-	-	GU29603550	1	
12	Nylon washer	-	-	-	-	GU29604650	1	
13	Screw	-	-	-	-	GU98280410	1	
14	Side cover	-	-	-	-	GU29603650	1	
15	Throttle cable assy	-	-	-	-	GU29999250	1	
18	Cable-guide	-	-	-	-	GU29603750	1	
19	Screw	-	-	-	-	GU29604850	1	
20	Nut	-	-	-	-	GU92601206	1	
21	Hex socket screw M6x16	-	-	-	-	GU98612316	1	
22	Throttle cable	-	-	-	-	GU23117570	1	
23	Splitter	-	-	-	-	GU30607910	1	
24	Hose clamp	-	-	-	-	GU19133400	1	
25	Clamp	-	-	-	-	GU23117970	1	
26	Screw	-	-	-	-	GU98822416	1	
27	Washer	-	-	-	-	GU95000208	1	
28	Spring washer 8x15x0,3	-	-	-	-	GU61270300	1	
29	Nut M8X1,25	-	-	-	-	GU92602208	1	
30	Screw	-	-	-	-	GU98822312	1	
31	Washer	-	-	-	-	GU95000206	1	
32	Nut M6x1	-	-	-	-	GU92630106	1	
33	Throttle cable	-	-	-	-	GU23117770	2	
34	Clutch cable	-	-	-	-	GU23093070	1	
35	Hose clamp 3,6x20,6	-	-	-	-	GU14609650	1	
	Hose clamp	-	-	-	-	GU61609630	1	
36	Mirrors-pair	-	-	-	-	GU23999570	1	
37	Bellows	-	-	-	-	GU23093870	1	

Revente Interdite - Revendita Vietata - Resaling Forbiden - Wiederverkauf Verboten

V 35 FLORIDA 350 1986-1990	GU059	00	TAB N.	13
MUDGUARDS				

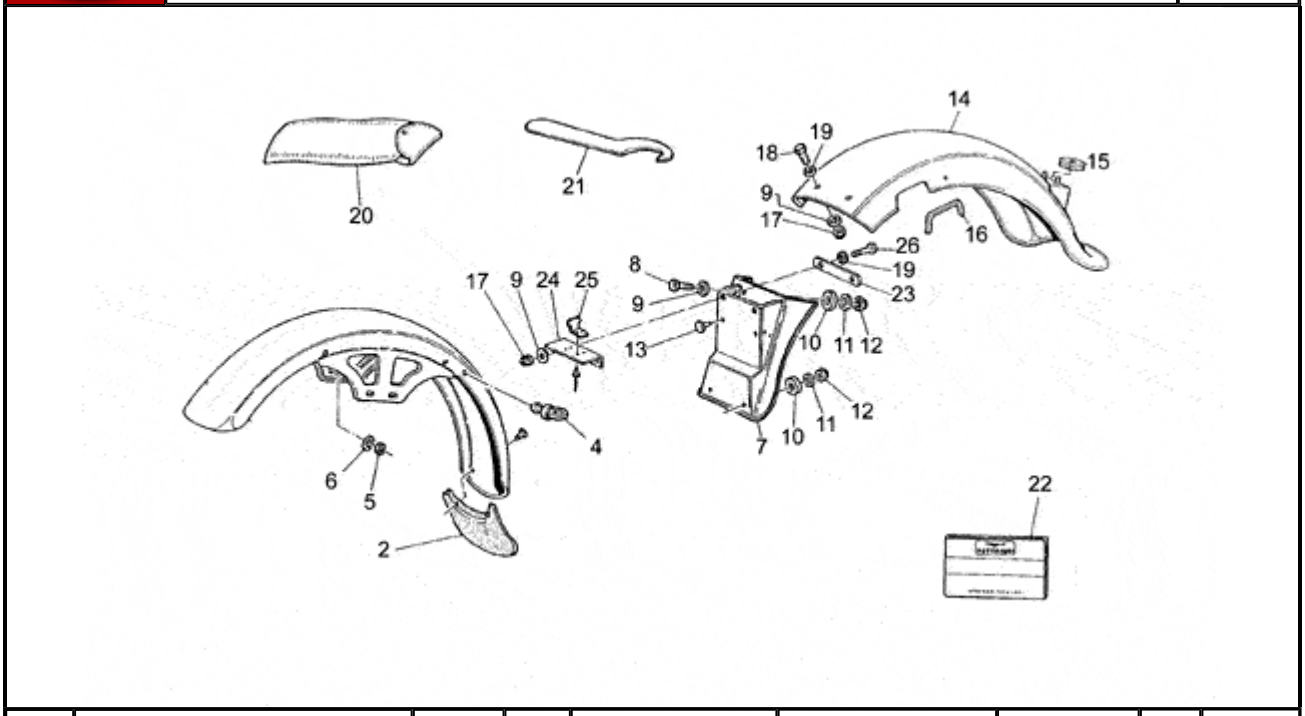

Pos.	Description	Year	I_M_	Country	Version	Code	Q.ty	P.Cod.
2	Splash guard	-	-	-	- -	GU27436920	1	
4	Eyelet	-	-	-	- -	GU19436500	2	
5	Nut M8X1,25	-	-	-	- -	GU92602208	4	
6	Spring washer 8x15x0,3	-	-	-	- -	GU61270300	4	
7	Splash guard	-	-	-	- -	GU19438770	1	
8	Screw	-	-	-	- -	GU98054325	2	
9	Washer 6,2X18X1	-	-	-	- -	GU95100118	4	
10	Rubber spacer	-	-	-	- -	GU93110060	10	
11	Washer 6,4x12x1,2	-	-	-	- -	GU95100141	4	
12	Nut M6x1	-	-	-	- -	GU92630106	4	
13	Drift	-	-	-	- -	GU19705900	4	
14	Rear mudguard	-	-	-	- -	GU23437010	1	
15	Rubber spacer	-	-	-	- -	GU91551099	1	
16	Gasket	-	-	-	- -	GU23438980	2	
17	Nut M6x1	-	-	-	- -	GU92630106	4	
18	Hex screw M6X20	-	-	-	- -	GU98054320	2	
19	Washer	-	-	-	- -	GU95000206	6	
20	Toolkit	-	-	-	- -	GU28929940	1	
21	Shock abs. adj. Wrench	-	-	-	- -	GU14912755	1	
22	Operator's handbook	-	-	I	- -	GU23900010	1	
	Operator's handbook	-	-	D	- -	GU23900013	1	
23	Plate	-	-	-	- -	GU23439210	1	
24	Control unit fixing plate	-	-	-	- -	GU23439010	1	
25	Holder	-	-	-	- -	GU23438510	2	
26	Screw	-	-	-	- -	GU98054312	2	

V 35 FLORIDA 350 1986-1990	GU059	00	TAB N.	14
FOOT RESTS - LATERAL STAND				

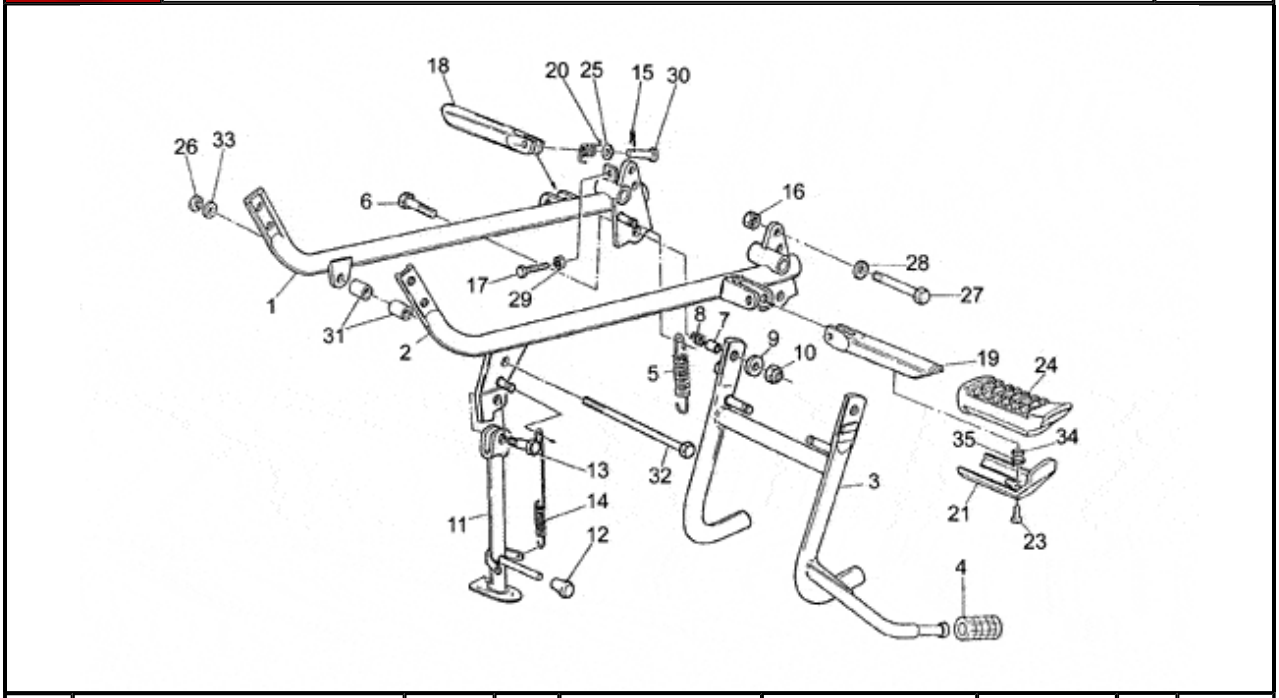

Pos.	Description	Year	I_M_	Country	Version	Code	Q.ty	P.Cod.
1	RH craddle arm	-	-	-	- -	GU23420310	1	
2	LH craddle arm	-	-	-	- -	GU23422110	1	
3	Central stand	-	-	-	- -	GU23430310	1	
4	Rubber pedal	-	-	-	- -	GU13432640	1	
5	Lateral stand spring	-	-	-	- -	GU12434001	2	
6	Screw	-	-	-	- -	GU98054530	2	
7	Spacer	-	-	-	- -	GU91181114	2	
8	Spring	-	-	-	- -	GU94322215	2	
9	Washer	-	-	-	- -	GU95000210	2	
10	Nut M10x1,5	-	-	-	- -	GU92630510	2	
11	Lateral stand	-	-	-	- -	GU23432011	1	
12	Lockup rubber	-	-	-	- -	GU19433000	1	
13	Pin	-	-	-	- -	GU99105129	1	
14	Spring	-	-	-	- -	GU23434010	2	
15	Split pin	-	-	-	- -	GU95401215	2	
16	Nut	-	-	-	- -	GU92602210	2	
17	Hex screw M6X22	-	-	-	- -	GU98054322	1	
18	RH front foot rest pipe	-	-	-	- -	GU23440710	1	
19	LH front foot rest pipe	-	-	-	- -	GU23441810	1	
20	Spring	-	-	-	- -	GU03441130	2	
21	Plate	-	-	-	- -	GU23441210	2	
23	Screw	-	-	-	- -	GU98054314	2	
24	Rubber pedal	-	-	-	- -	GU23443210	2	
25	Washer	-	-	-	- -	GU95000208	2	
26	Nut	-	-	-	- -	GU92602210	1	
27	Screw	-	-	-	- -	GU98052565	2	
28	Washer 10,2x18x2	-	-	-	- -	GU95004210	2	
29	Nut	-	-	-	- -	GU92602206	1	
30	Pin	-	-	-	- -	GU23442210	2	
31	Bush	-	-	-	- -	GU19017000	2	
32	Pin M10x250	-	-	-	- -	GU53429500	1	
33	Washer 10,2x18x2	-	-	-	- -	GU95004210	1	
34	Spacer	-	-	-	- -	GU91180602	2	
35	Spring washer	-	-	-	- -	GU95129130	2	

V 35 FLORIDA 350 1986-1990	GU059	00	TAB N.	15
REAR MASTER CYLINDER				

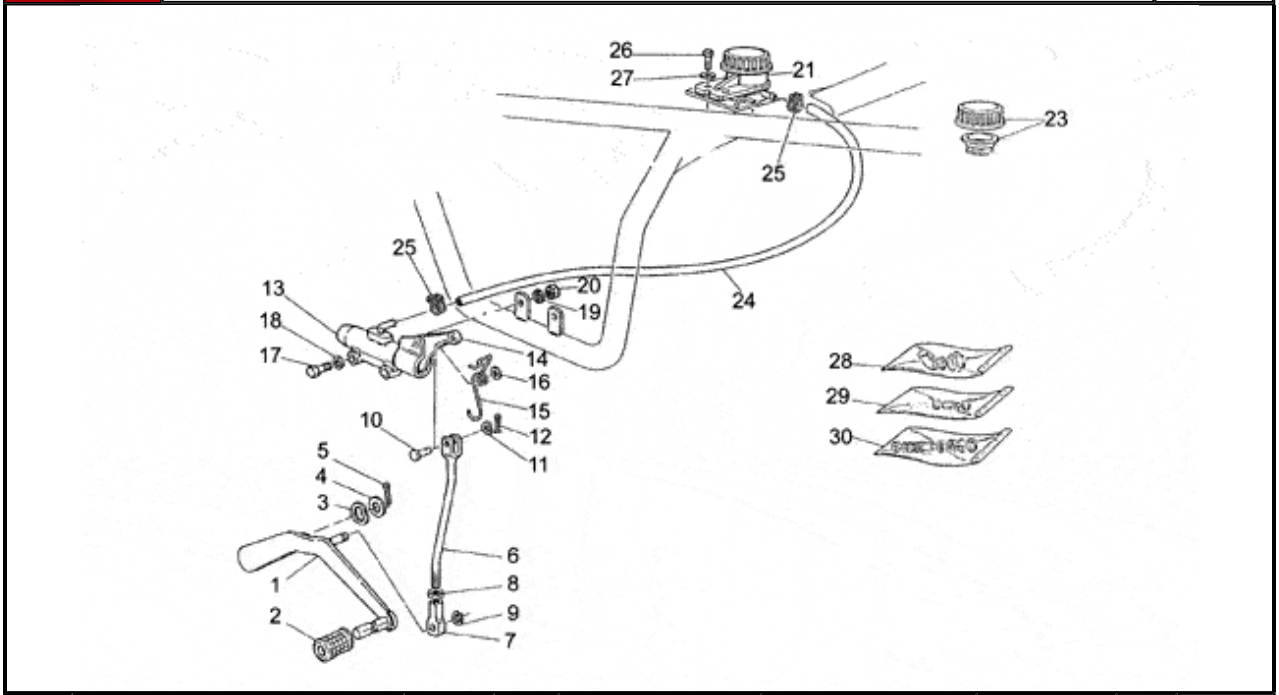

Pos.	Description	Year	I_M_	Country	Version	Code	Q.ty	P.Cod.
1	Rear brake lever	-	-	-	-	GU19677000	1	
2	Rubber spacer	-	-	-	-	GU14251001	1	
3	Spring washer	-	-	-	-	GU95129260	1	
4	Flat washer	-	-	-	-	GU95004215	1	
5	Split pin	-	-	-	-	GU95500227	1	
6	Change gear tie rod compl.	-	-	-	-	GU19675000	1	
7	Block	-	-	-	-	GU18257551	1	
8	Nut	-	-	-	-	GU92690073	1	
9	Circlip	-	-	-	-	GU90271008	1	
10	Pin	-	-	-	-	GU95770265	1	
11	Washer	-	-	-	-	GU95129110	1	
12	Split pin	-	-	-	-	GU95500222	1	
13	Rear master cylinder	-	-	-	-	GU31666990	1	
14	Rear brake lever	-	-	-	-	GU19667500	1	
15	Rear brake lever spring	-	-	-	-	GU19667600	1	
16	Washer 6,15x11x0,8	-	-	-	-	GU95004206	1	
17	Screw	-	-	-	-	GU98052326	2	
18	Washer	-	-	-	-	GU95000206	2	
19	Notched washer	-	-	-	-	GU95021106	2	
20	Nut	-	-	-	-	GU92602206	2	
21	Brake oil tank	-	-	-	-	GU65663500	1	
23	Tank cap	-	-	-	-	GU17661052	1	
24	Rear brake hose	-	-	-	-	GU00823950050	1	
25	Hose clamp	-	-	-	-	GU19157800	2	
26	Screw	-	-	-	-	GU98054216	2	
27	Washer 5,25x14x1,5	-	-	-	-	GU95100059	2	
28	Pump connection overhaul unit	-	-	-	-	GU19659500	1	
29	Lever overhaul kit	-	-	-	-	GU19659600	1	
30	Pump revision kit	-	-	-	-	GU17659350	1	

Revente Interdite - Revendita Vietata - Resaling Forbiden - Wiederverkauf Verboten

V 35 FLORIDA 350 1986-1990	GU059	00	TAB N.	16
FRONT WHEEL				

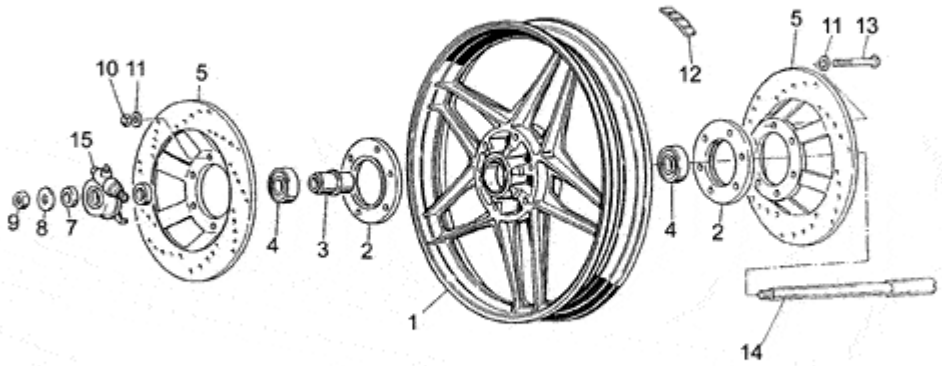

Pos.	Description	Year	I_M_	Country	Version	Code	Q.ty	P.Cod.
1	Front wheel 2,15x18	-	-	-	- -	GU23610380	1	
2	Flange	-	-	-	- -	GU14611255	2	
3	Spacer	-	-	-	- -	GU19615335	1	
4	Bearing	-	-	-	- -	GU92204217	2	
5	Spacer	-	-	-	- -	GU19615335	2	
7	Spacer	-	-	-	- -	GU62616320	1	
8	Washer 17X27X2	-	-	-	- -	GU95004217	1	
9	Nut M16X1,5	-	-	-	- -	GU92602516	1	
10	Cap nut	-	-	-	- -	GU92730082	6	
11	Washer	-	-	-	- -	GU95000208	12	
12	Counterweight	-	-	-	- -	GU14616150	4	
13	Screw m8x90	-	-	-	- -	GU98052490	6	
14	Front wheel spindle	-	-	-	- -	GU62614120	1	
15	Odometer gear	-	-	-	- -	GU39762501	2	

V 35 FLORIDA 350 1986-1990	GU059	00	TAB N.	17
REAR WHEEL				

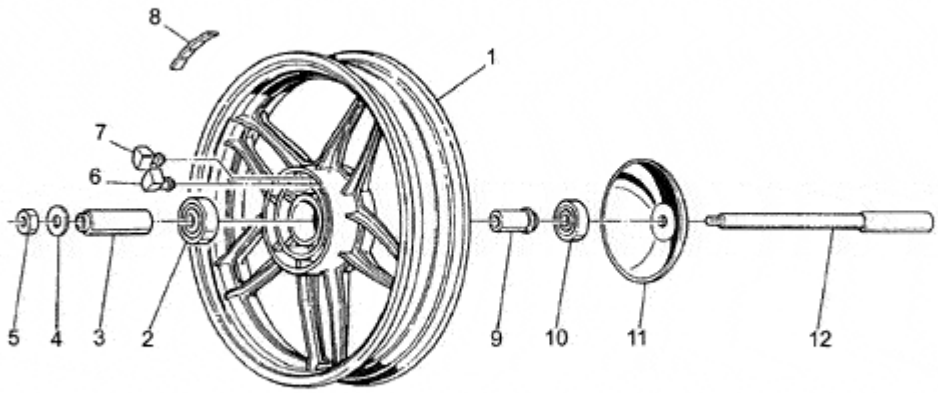

Pos.	Description	Year	I_M_	Country	Version	Code	Q.ty	P.Cod.
1	Rear wheel 2,50x16"	-	-	-	- -	GU23630680	1	
2	Bearing	-	-	-	- -	GU92204218	1	
3	Spacer	-	-	-	- -	GU19634100	1	
4	Washer	-	-	-	- -	GU14634400	1	
5	Nut M6X1,5	-	-	-	- -	GU92602316	1	
6	RH rubber coupling	-	-	-	- -	GU19632501	6	
7	LH rubber coupling	-	-	-	- -	GU19632502	6	
8	Counterweight	-	-	-	- -	GU14616150	4	
9	Bearing internal spacer	-	-	-	- -	GU19633935	1	
10	Bearing	-	-	-	- -	GU92204217	1	
11	Protection	-	-	-	- -	GU19636400	1	
12	Rear wheel spindle	-	-	-	- -	GU23633380	1	

Revente Interdite - Revendita Vietata - Resaling Forbiden - Wiederverkauf Verboten

V 35 FLORIDA 350 1986-1990	GU059	00	TAB N.	18
FRONT/REAR SHOCK ABSORBER				

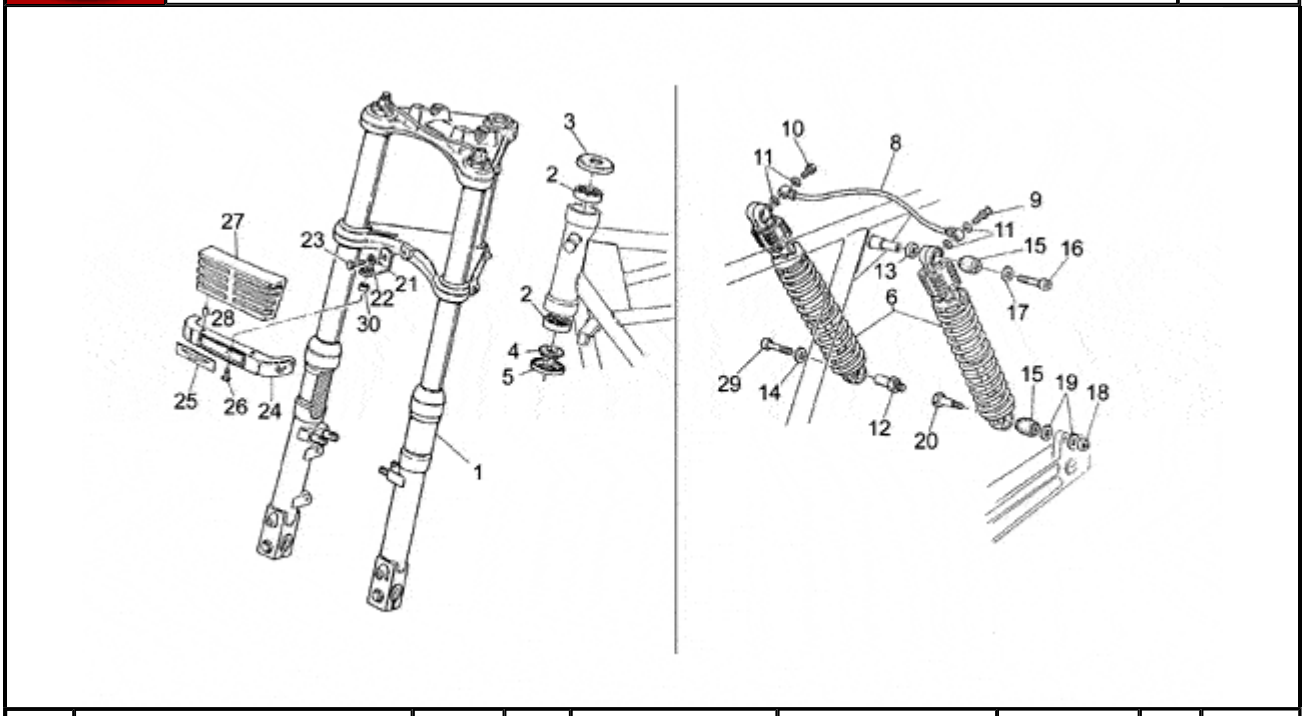

Pos.	Description	Year	I_M_	Country	Version	Code	Q.ty	P.Cod.
1	Front fork	-	-	-	- -	GU23490312	1	
2	Tap.roller bearing	-	-	-	- -	GU92249225	2	
3	Cup	-	-	-	- -	GU14494600	1	
4	Clearance washer	-	-	-	- -	GU14516700	1	
5	Dust cover	-	-	-	- -	GU14517000	1	
6	Shock absorber-pair	-	-	-	K -	GU23999270	2	
8	Pipe	-	-	-	- -	GU19556160	1	
9	Air valve	-	-	-	- -	GU28556250	2	
10	Bored screw	-	-	-	- -	GU28556450	1	
11	Copper washer	-	-	-	- -	GU28556350	4	
12	Pin	-	-	-	- -	GU23555281	1	
13	Spacer	-	-	-	- -	GU91181407	2	
14	Washer	-	-	-	- -	GU95100256	1	
15	Silent-block	-	-	-	- -	GU14551655	4	
16	Screw M8X30	-	-	-	- -	GU98622430	2	
17	Washer	-	-	-	- -	GU95004208	2	
18	Nut	-	-	-	- -	GU92602410	1	
19	Washer 10,2x18x2	-	-	-	- -	GU95004210	2	
20	Pin	-	-	-	- -	GU23555280	1	
21	Plate	-	-	-	- -	GU19498060	1	
22	Special washer	-	-	-	- -	GU61013800	1	
23	Hex screw M6X20	-	-	-	- -	GU98054320	1	
24	Clamp	-	-	-	- -	GU23751310	1	
25	Constructor dataplate	-	-	-	- -	GU23769510	1	
26	Screw	-	-	-	- -	GU98326014	1	
27	Turn indicator support grill	-	-	-	- -	GU23505810	1	
28	Pin	-	-	-	- -	GU23922210	2	
29	Screw	-	-	-	- -	GU98822416	1	
30	Spacer	-	-	-	- -	GU91180706	1	

V 35 FLORIDA 350 1986-1990	GU059	00	TAB N.	19
INSTRUMENTS				

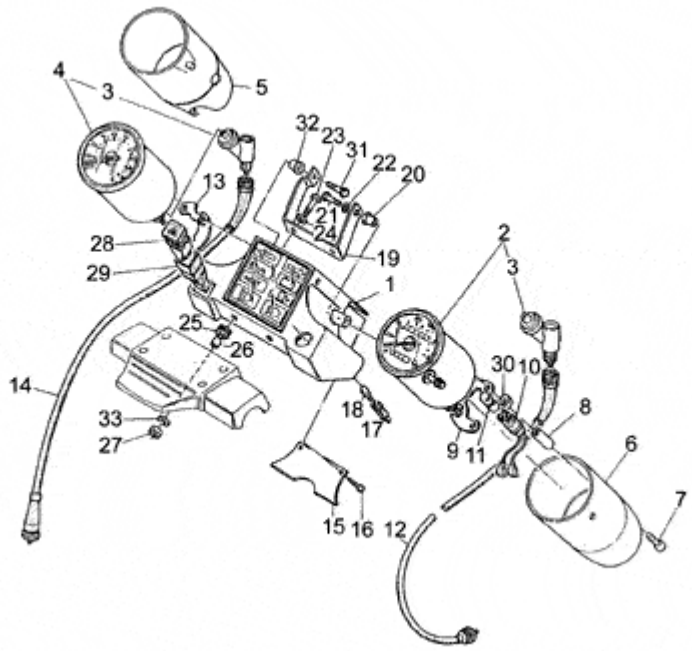

Pos.	Description	Year	I_M_	Country	Version	Code	Q.ty	P.Cod.
1	Dashboard box assy.	-	-	-	- -	GU23760010	1	
2	Speedometer	-	-	-	- -	GU23761510	1	
3	Gear 60°	-	-	-	- -	GU23768310	2	
4	Tachometer	-	-	-	- -	GU23767210	1	
5	Rev counter container	-	-	-	- -	GU23761910	1	
6	Speedometer container	-	-	-	- -	GU23762010	1	
7	Screw	-	-	-	- -	GU98290520	2	
8	Spacer	-	-	-	- -	GU23765110	2	
9	Plate	-	-	-	- -	GU23764910	1	
10	Lampholder	-	-	-	- -	GU14768650	2	
11	Lamp 12v-3w	-	-	-	- -	GU93450120	2	
12	Speedometer transmission	-	-	-	- -	GU27760410	1	
13	Plate	-	-	-	- -	GU23766510	1	
14	Rev counter transmission	-	-	-	- -	GU27768120	1	
15	Lower cover	-	-	-	- -	GU29765250	1	
16	Self-tap screw	-	-	-	- -	GU99210210	2	
17	Lampholder	-	-	-	- -	GU19768680	8	
18	Lamp 12V-1,2W	-	-	-	- -	GU93450140	8	
19	U-bolt	-	-	-	- -	GU23764110	1	
20	Spacer	-	-	-	- -	GU23766911	1	
21	Screw	-	-	-	- -	GU98054225	1	
22	Washer	-	-	-	- -	GU95004205	2	
23	Hex screw M6X20	-	-	-	- -	GU98054320	2	
24	Washer 6,15x11x0,8	-	-	-	- -	GU95004206	2	
25	Rubber spacer	-	-	-	- -	GU91551085	2	
26	Spacer	-	-	-	- -	GU91180607	2	
27	Nut	-	-	-	- -	GU92602206	2	
28	Turn indicator switch	-	-	-	- -	GU28745760	1	
29	Rubber protection	-	-	-	- -	GU35755780	1	
30	Rubber spacer	-	-	-	- -	GU93110060	4	
31	Screw	-	-	-	- -	GU98054230	1	
32	Spacer	-	-	-	- -	GU23766910	1	
33	Washer 6,2X18X1	-	-	-	- -	GU95100118	2	

V 35 FLORIDA 350 1986-1990	GU059	00	TAB N.	20
FRAME				

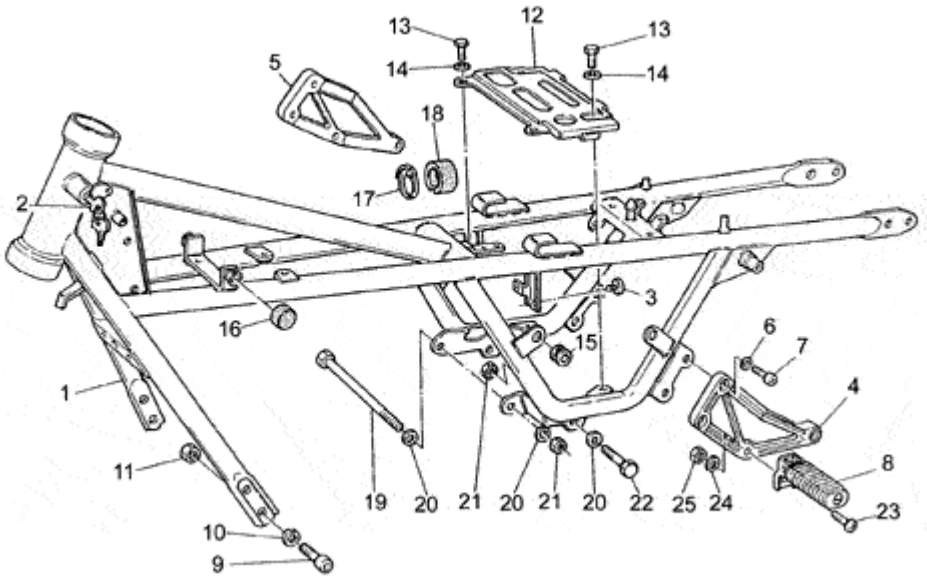

Pos.	Description	Year	I_M_	Country	Version	Code	Q.ty	P.Cod.
1	Frame	-	-	-	- -	GU23400110	1	
2	Lock	-	-	-	- -	GU19782520	1	
3	Drift	-	-	-	- -	GU19705900	4	
4	LH footrest support	-	-	-	- -	GU23446010	1	
5	RH footrest support	-	-	-	- -	GU23443510	1	
6	Washer 8,4X13X0,8	-	-	-	- -	GU14615901	4	
7	Screw	-	-	-	- -	GU98622416	4	
8	Rear footrest	-	-	-	- -	GU23442310	2	
9	Screw 25 mm	-	-	-	- -	GU98622525	4	
10	Washer	-	-	-	- -	GU95120105	4	
11	Nut	-	-	-	- -	GU92602210	4	
12	Plate	-	-	-	- -	GU27418210	1	
13	Screw	-	-	-	- -	GU98054418	4	
14	Washer	-	-	-	- -	GU95004208	4	
15	Rubber spacer	-	-	-	- -	GU91551085	4	
16	Drift	-	-	-	- -	GU39103400	2	
17	Hose clamp 3,6x20,6	-	-	-	- -	GU14609650	2	
18	Drift	-	-	-	- -	GU28109040	2	
19	Pin M10x205	-	-	-	- -	GU98110199	1	
20	Washer 10,2x18x2	-	-	-	- -	GU95004210	4	
21	Nut	-	-	-	- -	GU92602210	3	
22	Screw	-	-	-	- -	GU98052555	2	
23	Screw	-	-	-	- -	GU98231025	2	
24	Washer 10,5X21X1	-	-	-	- -	GU14018400	2	
25	Nut	-	-	-	- -	GU92601210	2	

Revente Interdite - Revendita Vietata - Resaling Forbiden - Wiederverkauf Verboten

V 35 FLORIDA 350 1986-1990	GU059	00	TAB N.	21
DRIVE SHAFT				

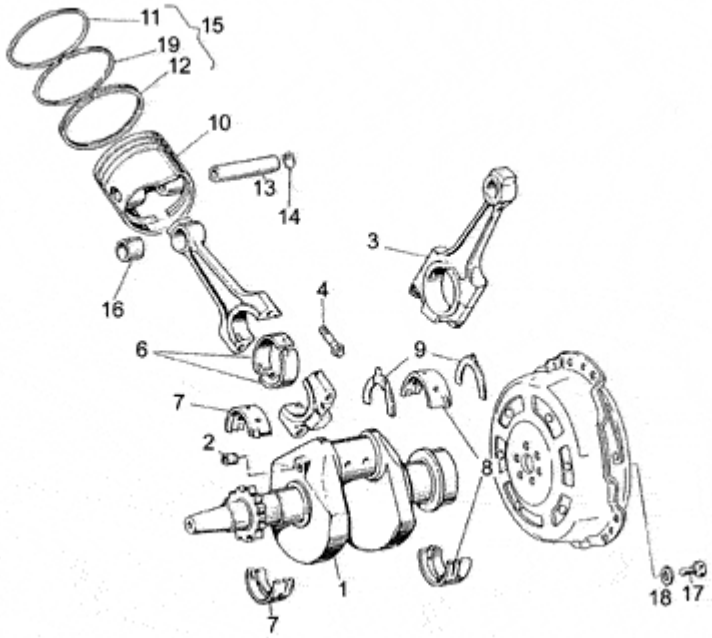

Pos.	Description	Year	I_M_	Country	Version	Code	Q.ty	P.Cod.
1	Drive shaft	-	-	-	- -	GU31064100	1	
2	Plug	-	-	-	- -	GU19065400	1	
3	Connecting rod	-	-	-	- -	GU19061521	2	
4	Screw	-	-	-	- -	GU19062221	4	
6	Bearing half-shell	-	-	-	- -	GU19062022	4	
7	Front main half-bearing	-	-	-	- -	GU19065623	2	
8	Rear main half-bearing	-	-	-	- -	GU19066522	2	
9	Shoulder	-	-	-	- -	GU31066480	2	
10	Piston	-	-	-	- -	GU31060400	2	
11	Ring	-	-	-	- -	GU19060750	2	
12	Scraper ring	-	-	-	- -	GU27061080	2	
13	Piston pin	-	-	-	- -	GU19061280	2	
14	Stop ring	-	-	-	- -	GU19061320	4	
15	Pistonring set	-	-	-	- -	GU27060680	2	
16	Bush	-	-	-	- -	GU19061821	2	
17	Screw	-	-	-	- -	GU19067700	6	
18	Washer 8,4X13X0,8	-	-	-	- -	GU14615901	6	
19	Piston ring	-	-	-	- -	GU27060880	2	

MOTO GUZZI	V 35 FLORIDA 350 1986-1990	GU059	00	TAB N.	22

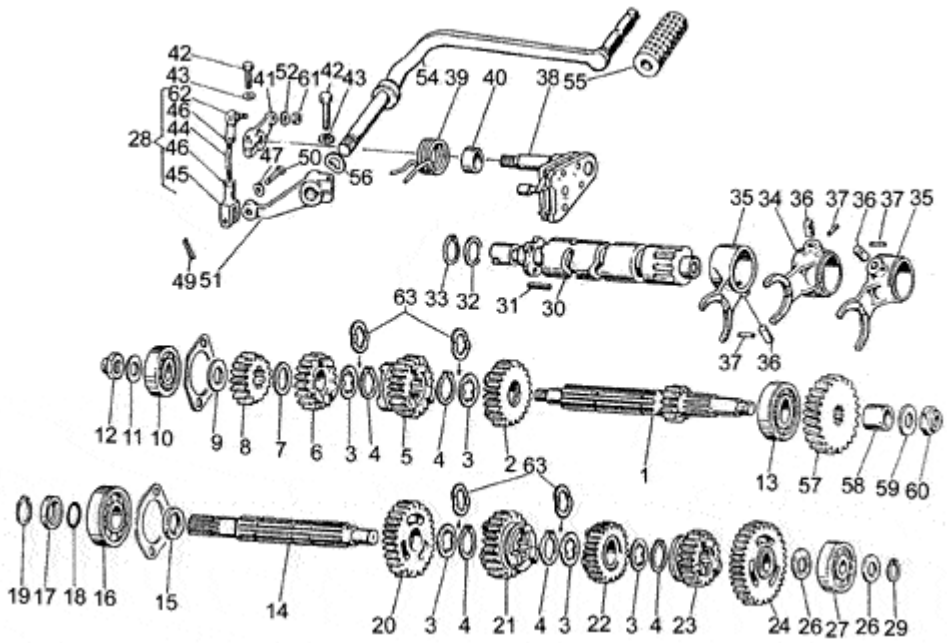

Pos.	Description	Year	I_M_	Country	Version	Code	Q.ty	P.Cod.
1	Primary gear shaft Z=11	-	-	-	- -	GU19210520	1	
2	Gear 5a AS Z=22	-	-	-	- -	GU19212020	1	
3	Thrust washer mm1	-	-	-	- -	GU19215420	5	
4	Circlip	-	-	-	- -	GU90271220	5	
5	Gear 4a AS Z=22	-	-	-	- -	GU19211820	1	
6	Gear 3a AS Z=18	-	-	-	- -	GU19211420	1	
7	Thrust washer	-	-	-	- -	GU19214620	1	
8	Gear	-	-	-	- -	GU19211320	1	
9	Washer	-	-	-	- -	GU19212800	1	
10	Ball bearing	-	-	-	- -	GU92201415	1	
11	Clearance washer	-	-	-	- -	GU39238100	1	
12	Nut	-	-	-	- -	GU10054100	1	
13	Bearing 20X47X14	-	-	-	- -	GU92201220	1	
14	Driven shaft	-	-	-	- -	GU19213620	1	
15	Spacer	-	-	-	- -	GU19212900	1	
16	Bearing 20X47X14	-	-	-	- -	GU92201220	1	
17	Spacer	-	-	-	- -	GU19213720	1	
18	Gasket ring 18,77X1,78	-	-	-	- -	GU90706188	1	
19	Circlip	-	-	-	- -	GU90271121	1	
20	Gear	-	-	-	- -	GU19214501	1	
21	Gear	-	-	-	- -	GU19214820	1	
22	Gear	-	-	-	- -	GU19215121	1	
23	Gear	-	-	-	- -	GU19215220	1	
24	Gear	-	-	-	- -	GU19214001	1	
26	Spacer	-	-	-	- -	GU35214300	2	
27	Ball bearing	-	-	-	- -	GU92201415	1	
28	Change gear tie rod compl.	-	-	-	- -	GU19257701	1	
29	Circlip	-	-	-	- -	GU90271115	1	
30	Shift cam	-	-	-	- -	GU19234420	1	
31	Pin	-	-	-	- -	GU19234600	4	
32	Spacer 1 mm	-	-	-	- -	GU19355300	1	
33	Snap ring	-	-	-	- -	GU90271020	1	
34	Fork AP	-	-	-	- -	GU19231220	1	

35	Fork AS	-	-	-	-	-	GU19231020	2
36	Roller	-	-	-	-	-	GU92297909	3
37	Pin	-	-	-	-	-	GU95520316	3
38	Pre-selector kit	-	-	-	01397N	-	GU20999520	1
39	Spring	-	-	-	01397N	-	GU28238261	1
	Spring	-	-	-	-	-	GU61238200	1
40	Spacer	-	-	-	01397N	-	GU20208520	1
	Bush	-	-	-	-	-	GU91182010	1
41	Shift lever	-	-	-	-	-	GU19258220	1
42	Screw	-	-	-	-	-	GU98052325	2
43	Washer	-	-	-	-	-	GU95000206	2
44	Tie rod	-	-	-	-	-	GU18257950	1
45	Fork	-	-	-	-	-	GU12626800	1
46	Nut	-	-	-	-	-	GU92602206	2
47	Washer	-	-	-	-	-	GU95129110	1
49	Split pin	-	-	-	-	-	GU95500222	1
50	Pin	-	-	-	-	-	GU95770265	1
51	Lever	-	-	-	-	-	GU19256900	1
52	Special washer	-	-	-	-	-	GU61013800	1
54	Complete gearchange lever	-	-	-	-	-	GU19250900	1
55	Rubber spacer	-	-	-	-	-	GU14251001	1
56	Spring washer	-	-	-	-	-	GU95129260	1
57	Gear Z=24	-	-	-	-	-	GU19211120	1
58	Bush	-	-	-	-	-	GU19266720	1
59	Clearance washer	-	-	-	-	-	GU39238100	1
60	Nut	-	-	-	-	-	GU10054100	1
61	Nut M6x1	-	-	-	-	-	GU92630106	1
62	Ball joint	-	-	-	-	-	GU18258101	1
63	Washer	-	-	-	-	-	GU19214320	4

MOTO GUZZI	V 35 FLORIDA 350 1986-1990	GU059	00	TAB N.	23

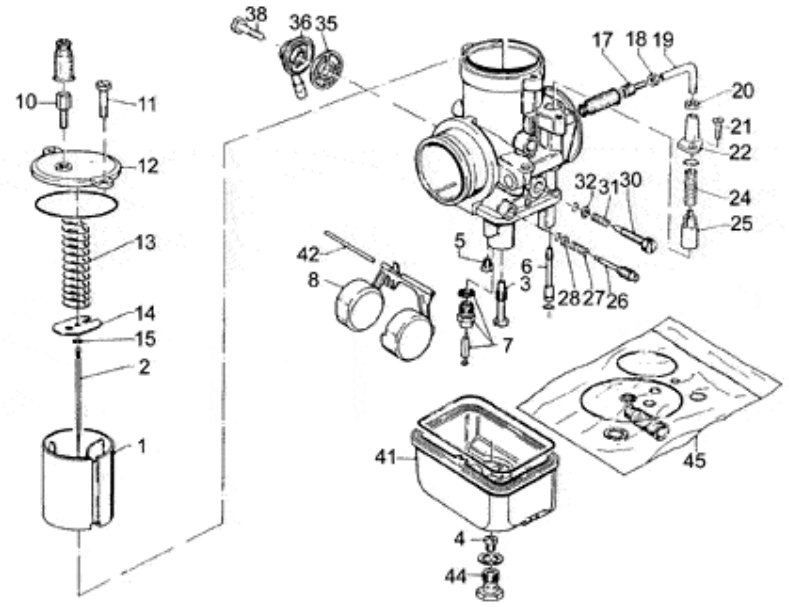

Pos.	Description	Year	I_M_	Country	Version	Code	Q.ty	P.Cod.
1	Gas valve 30	-	-	-	-	GU27934820	2	
2	Conical pin 19-2a	-	-	-	-	GU23937710	2	
3	Needle valve 262H	-	-	-	-	GU27935521	2	
4	Main jet	-	-	-	-	GU17935767	2	
5	Idle jet 42	-	-	-	-	GU23935910	2	
6	Starter jet 60	-	-	-	-	GU19936000	2	
7	Needle valve	-	-	-	-	GU19934600	2	
8	Float gr.9,5	-	-	-	-	GU27934315	2	
10	Wire tensioner screw	-	-	-	-	GU12937200	2	
11	Screw	-	-	-	-	GU14934650	2	
12	Cover	-	-	-	-	GU19935080	2	
13	Gas valve return spring	-	-	-	-	GU19937180	2	
14	Plate	-	-	-	-	GU19938580	2	
15	Conical pin clip	-	-	-	-	GU65933600	2	
17	Wire tensioner screw	-	-	-	-	GU53937200	2	
18	Nut	-	-	-	-	GU12937300	2	
19	Pipe	-	-	-	-	GU49938900	2	
20	Nut	-	-	-	-	GU19938880	4	
21	Screw	-	-	-	-	GU13937900	2	
22	Starter device cover	-	-	-	-	GU17937450	2	
24	Valve spring	-	-	-	-	GU39937600	2	
25	Starter valve	-	-	-	-	GU13937800	2	
26	Adj.min.eng.speed screw	-	-	-	-	GU13936200	2	
27	Spring	-	-	-	-	GU13936300	2	
28	Flat washer	-	-	-	-	GU65933700	2	
30	Gas valve adjuster screw	-	-	-	-	GU13936600	2	
31	Spring	-	-	-	-	GU13936700	2	
32	Flat washer	-	-	-	-	GU14931650	2	
35	Fuel filter	-	-	-	-	GU43934000	2	
36	Fuel pipe union cap	-	-	-	-	GU13934600	2	
38	Cap fixing screw	-	-	-	-	GU10934900	2	
41	Aluminium float chamber	-	-	-	-	GU19934480	2	
	Float chamber plastica	-	-	-	03399N	GU31934460	2	
42	Float pin	-	-	-	-	GU13933100	2	
44	Plug with OR	-	-	-	-	GU10933700	2	
45	Gaskets set	-	-	-	-	GU19939980	1	

Revente Interdite - Revendita Vietata - Resaling Forbiden - Wiederverkauf Verboten

V 35 FLORIDA 350 1986-1990	GU059	00	TAB N.	24
CARBURETTORS				

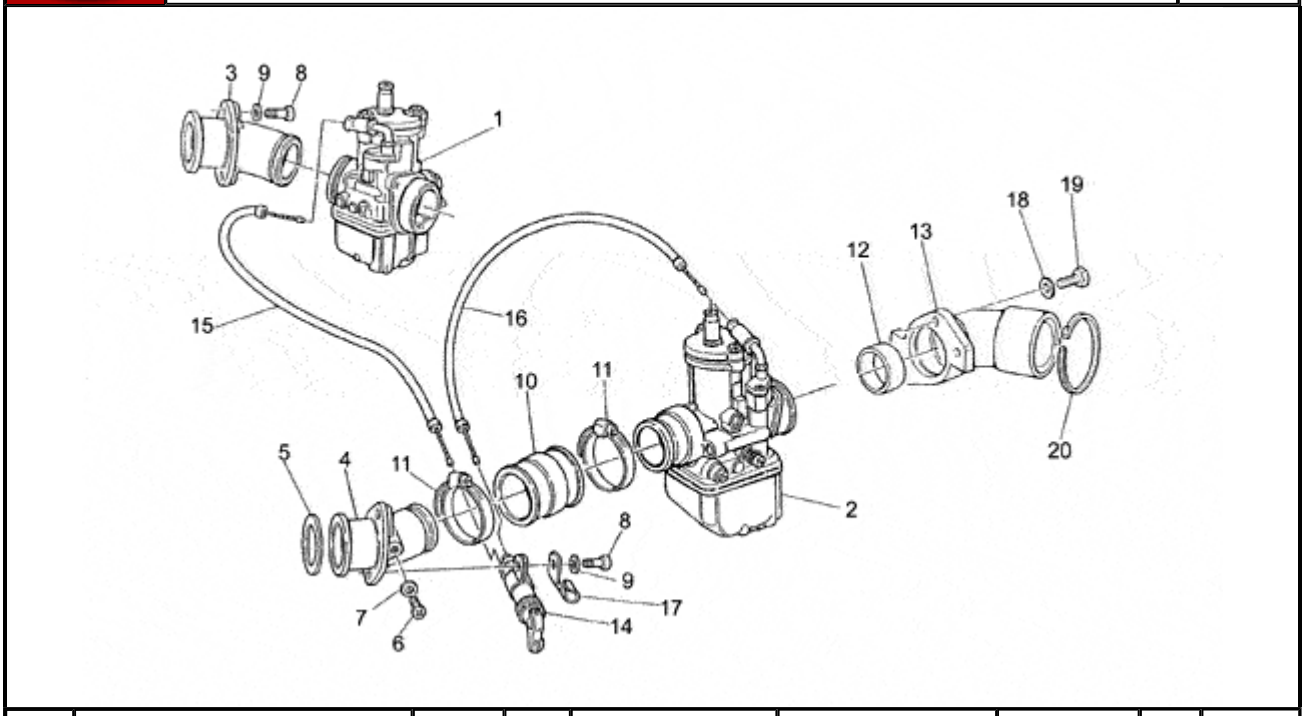

Pos.	Description	Year	I_M_	Country	Version	Code	Q.ty	P.Cod.
1	Carburettor RH PHBH 28	-	-	-	- -	GU27112615	1	
2	Carburettor LH PHBH 28	-	-	-	- -	GU27112616	1	
3	RH intake manifold	-	-	-	- -	GU31115000	1	
4	LH intake manifold	-	-	-	- -	GU31115001	1	
5	Gasket	-	-	-	- -	GU19115580	2	
6	Special screw M6X10	-	-	-	- -	GU98310611	2	
7	Washer 6,25x10x1,5	-	-	-	- -	GU95100116	2	
8	Screw	-	-	-	- -	GU98812325	4	
9	Special washer	-	-	-	- -	GU61013800	4	
10	Hose	-	-	-	- -	GU19114360	2	
11	Hose clamp	-	-	-	- -	GU93305045	4	
12	Gasket ring	-	-	-	- -	GU19114680	2	
13	Manifold	-	-	-	- -	GU19114480	2	
14	Starter	-	-	-	- -	GU23133100	1	
15	Choke cable	-	-	-	- -	GU19133500	1	
16	LH choke cable	-	-	-	- -	GU19134000	1	
17	Hose clamp	-	-	-	- -	GU19718000	1	
18	Washer	-	-	-	- -	GU95000205	4	
19	Screw	-	-	-	- -	GU98054220	4	
20	Hose clamp 3,6x20,6	-	-	-	- -	GU14609650	2	

V 35 FLORIDA 350 1986-1990	GU059	00	TAB N.	25
CRANKCASE				

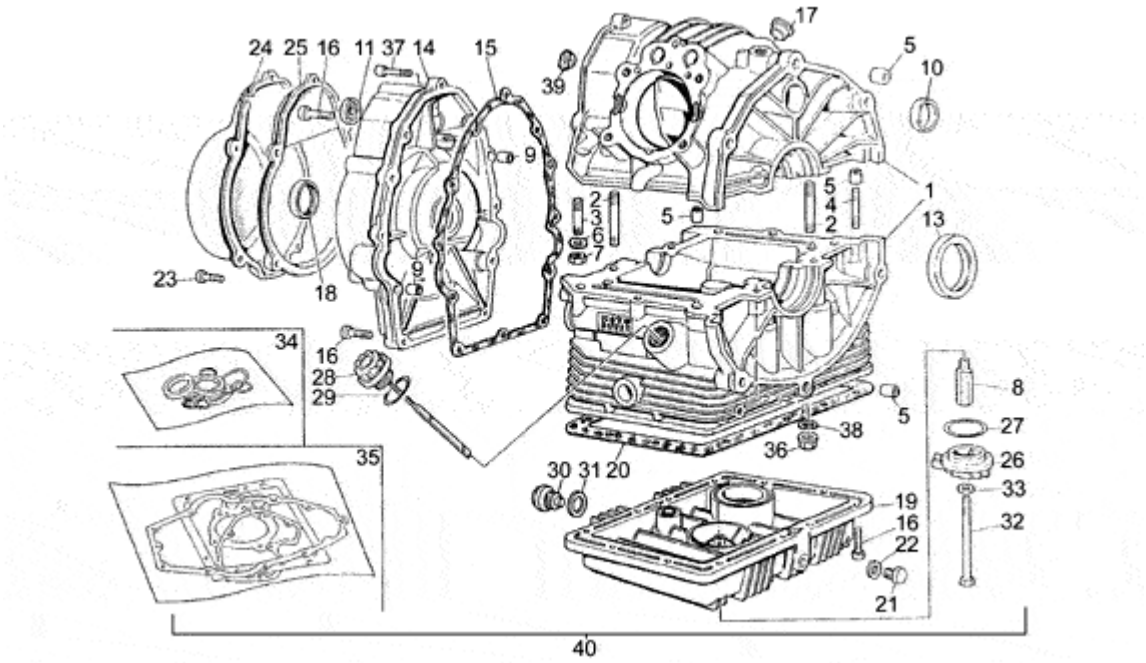

Pos.	Description	Year	I_M_	Country	Version	Code	Q.ty	P.Cod.
1	Crankcase	-	-	-	- -	GU31000100	1	
2	Stud bolt	-	-	-	- -	GU96451560	4	
3	Stud bolt	-	-	-	- -	GU96451430	4	
4	Stud bolt	-	-	-	- -	GU96508055	2	
5	Bush	-	-	-	- -	GU19015020	4	
6	Spring washer 8x15x0,3	-	-	-	- -	GU61270300	6	
7	Nut	-	-	-	- -	GU92601208	6	
8	Union	-	-	-	- -	GU19003800	1	
9	Bush 6,6x9x13	-	-	-	- -	GU19002020	2	
10	Plug	-	-	-	- -	GU19016320	1	
11	Gasket ring	-	-	-	- -	GU90401530	1	
13	Gasket ring	-	-	-	- -	GU90405367	1	
14	Timing system cover	-	-	-	- -	GU31001431	1	
15	Gasket	-	-	-	- -	GU19001200	1	
16	Screw	-	-	-	- -	GU98610325	22	
17	Plug	-	-	-	- -	GU19017120	1	
18	Gasket ring 28x38x7	-	-	-	- -	GU90402840	1	
19	Oil sump black	-	-	-	- -	GU27003550	1	
20	Gasket	-	-	-	- -	GU19003602	1	
21	Oil plug	-	-	-	- -	GU95980213	1	
22	Gasket	-	-	-	- -	GU10528900	1	
23	Hex socket screw M6x18	-	-	-	- -	GU98610335	5	
24	Cover	-	-	-	- -	GU27001636	1	
25	Flange	-	-	-	- -	GU27001136	1	
26	Plug	-	-	-	- -	GU31003431	1	
27	O-ring	-	-	-	- -	GU90706444	1	
28	Oil filler plug	-	-	-	- -	GU19004920	1	
29	Gasket ring	-	-	-	- -	GU90706282	1	
30	Oil unload plug	-	-	-	- -	GU12003702	1	
31	Gasket 20,1x28x2	-	-	-	- -	GU95100709	1	
32	Bolt	-	-	-	- -	GU98072490	1	
33	Gasket 8,25x15x1	-	-	-	- -	GU12154200	1	
34	Oil seals - set	-	-	-	- -	GU31999565	1	

Revente Interdite - Revendita Vietata - Resaling Forbiden - Wiederverkauf Verboten

35	Engine set gasket	-	-	-	-	-	GU19999080	1
36	Column nut	-	-	-	-	-	GU92660010	4
37	Screw M6x30	-	-	-	-	-	GU98610330	2
38	Washer 10,5X18X0,8	-	-	-	-	-	GU95129180	4
39	Gasket	-	-	-	-	-	GU31016900	2
40	Engine	-	-	-	-	-	GU31991000	1

Revente Interdite - Revendita Vietata - Resaling Forbiden - Wiederverkauf Verboten

V 35 FLORIDA 350 1986-1990	GU059	00	TAB N.	26
AIR FILTER				

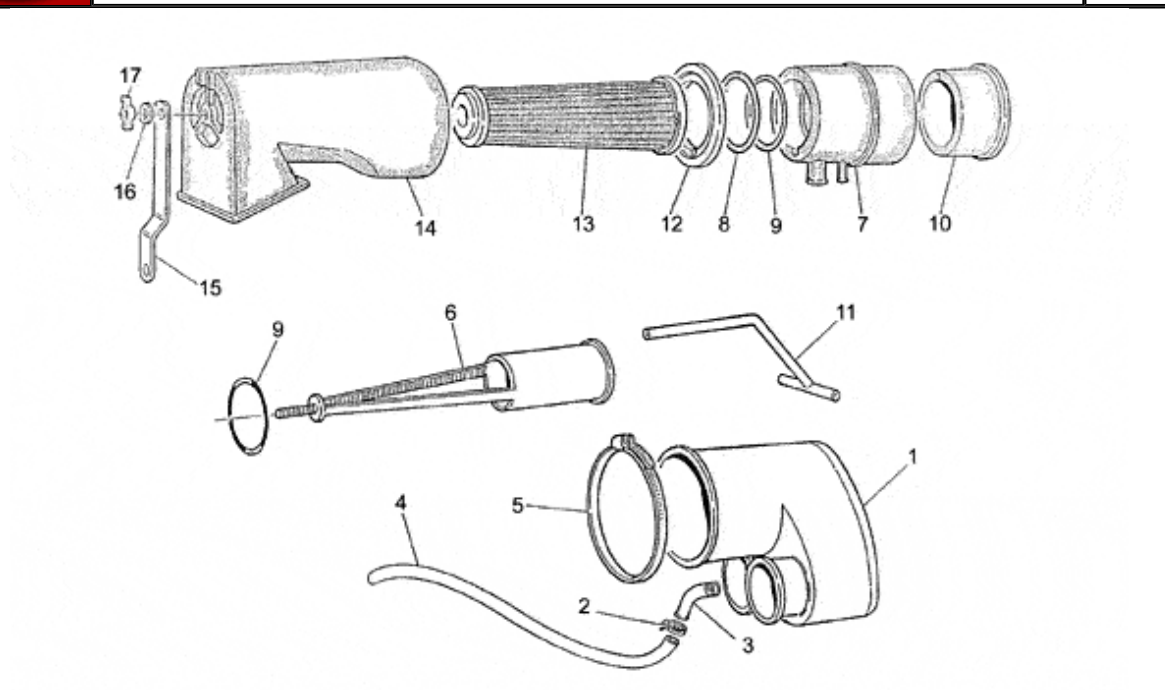

Pos.	Description	Year	I_M_	Country	Version	Code	Q.ty	P.Cod.
1	Intake manifold	-	-	-	-	GU19114300	1	
2	Hose clamp	-	-	-	-	GU93305092	1	
3	Pipe	-	-	-	-	GU17114650	1	
4	Rubber pipe 5X9	-	-	-	-	GU00823944050	1	
5	Hose clamp 3,6x20,6	-	-	-	-	GU14609650	1	
6	Air filter support	-	-	-	-	GU19155775	1	
7	Front hose	-	-	-	-	GU19156701	1	
8	Gasket	-	-	-	-	GU19113900	1	
9	Gasket ring	-	-	-	-	GU90706552	2	
10	Rear hose	-	-	-	-	GU19156900	1	
11	Breather pipe	-	-	-	-	GU19156001	1	
12	Ring	-	-	-	-	GU17113450	1	
13	Air filter	-	-	-	-	GU17113651	1	
14	Filter cover	-	-	-	-	GU17114050	1	
15	Support plate	-	-	-	-	GU27114120	1	
16	Washer 5,25x14x1,5	-	-	-	-	GU95100059	1	
17	Nut	-	-	-	-	GU92670305	1	

Revente Interdite - Revendita Vietata - Resaling Forbiden - Wiederverkauf Verboten

V 35 FLORIDA 350 1986-1990	GU059	00	TAB N.	27
CYLINDER HEAD				

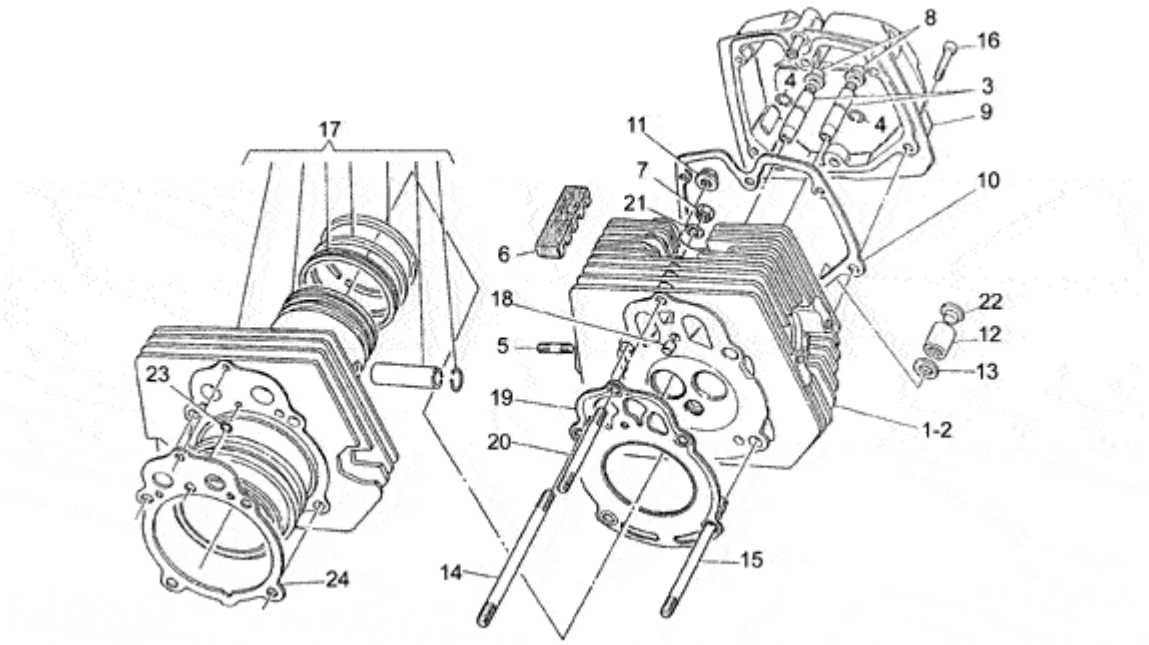

Pos.	Description	Year	I_M_	Country	Version	Code	Q.ty	P.Cod.
1	RH cylinder head	-	-	-	- -	GU23022170	1	
2	LH cylinder head	-	-	-	- -	GU23022270	1	
3	Valve guide	-	-	-	- -	GU61036801	4	
4	Snap ring	-	-	-	- -	GU90353009	4	
5	Stud bolt	-	-	-	- -	GU96506042	4	
6	Anti-vibration plate	-	-	-	- -	GU19025300	4	
7	Nut	-	-	-	- -	GU23021910	2	
8	Oil seal	-	-	-	- -	GU19037820	4	
9	Valves cover, stain.	-	-	-	- -	GU31023500	2	
10	Gasket	-	-	-	- -	GU19023700	2	
11	Nut M10X1,5	-	-	-	- -	GU92603010	4	
12	Nut	-	-	-	- -	GU31021900	4	
13	Washer 10,5X18X0,8	-	-	-	- -	GU95129180	4	
14	Long tie rod	-	-	-	- -	GU96510177	4	
15	Short tie rod	-	-	-	- -	GU96510120	4	
16	Hex socket screw M6X25	-	-	-	- -	GU98622325	12	
17	Cylinder with piston	-	-	-	- -	GU31060100	2	
18	Bush	-	-	-	- -	GU19021320	2	
19	Gasket	-	-	-	- -	GU27022080	2	
20	Tie rod	-	-	-	- -	GU96500102	2	
21	Spring washer 8x15x0,3	-	-	-	- -	GU61270300	2	
22	Plug	-	-	-	- -	GU93180245	4	
23	O-ring	-	-	-	- -	GU61027200	2	
24	Gasket	-	-	-	- -	GU27020820	2	

V 35 FLORIDA 350 1986-1990	GU059	00	TAB N.	28
TIMING SYSTEM				

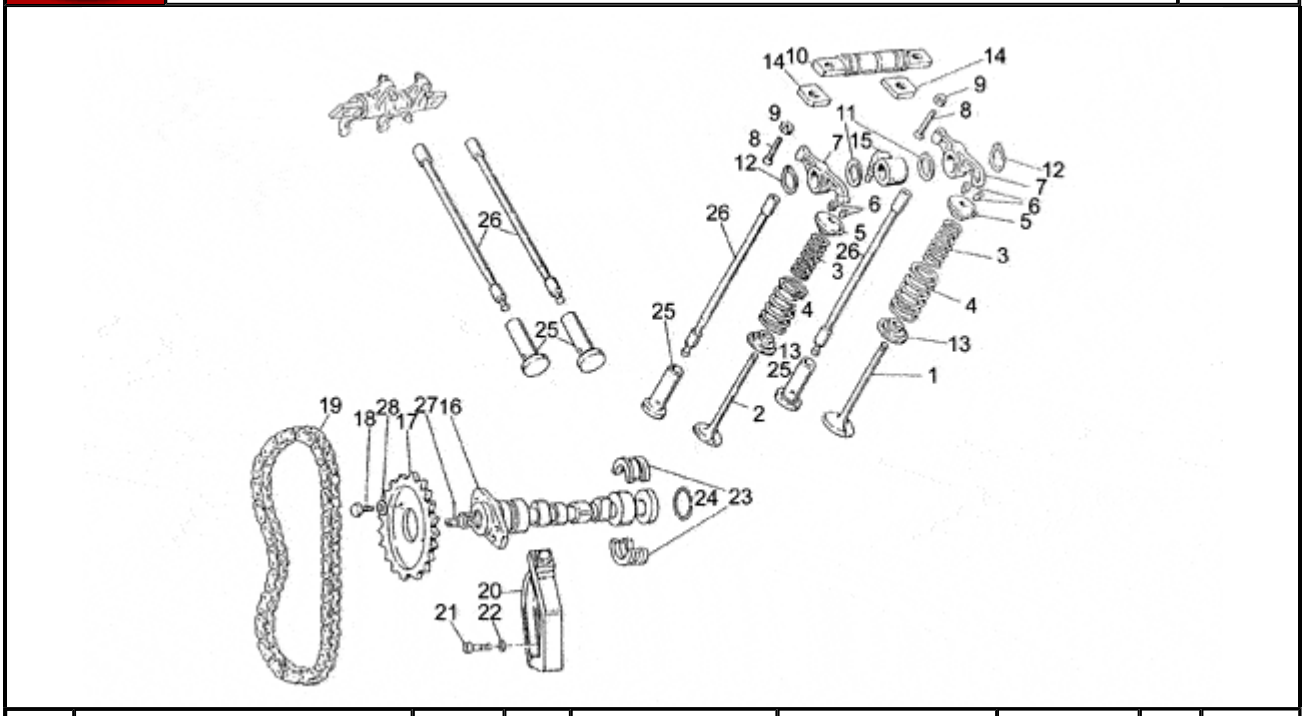

Pos.	Description	Year	I_M_	Country	Version	Code	Q.ty	P.Cod.
1	Intake valve	-	-	-	- -	GU19036082	2	
2	Exhaust valve	-	-	-	- -	GU19036183	2	
3	Spring	-	-	-	- -	GU61037600	4	
4	Spring	-	-	-	- -	GU61037500	4	
5	Upper cup	-	-	-	- -	GU61038000	4	
6	Half-cone	-	-	-	- -	GU61038100	8	
7	Rocker arm assy.	-	-	-	- -	GU19030500	4	
8	Screw	-	-	-	- -	GU19034000	4	
9	Nut M6x1	-	-	-	- -	GU92602406	4	
10	Rocker shaft	-	-	-	- -	GU19032080	2	
11	Thrust washer	-	-	-	- -	GU19032380	4	
12	Circlip	-	-	-	- -	GU90271018	4	
13	Lower cup	-	-	-	- -	GU61037000	4	
14	Spacer	-	-	-	- -	GU19032980	4	
15	Hose	-	-	-	- -	GU19027500	2	
16	Camshaft	-	-	-	- -	GU19053320	1	
17	Timing system gear	-	-	-	- -	GU19054521	1	
18	Bolt	-	-	-	- -	GU61054900	2	
19	Camshaft chain	-	-	-	- -	GU19058021	1	
20	Chain stretching drive	-	-	-	- -	GU19058220	1	
21	Screw	-	-	-	- -	GU98822316	1	
22	Washer	-	-	-	- -	GU95129115	1	
23	Sector	-	-	-	- -	GU19055700	2	
24	Snap ring	-	-	-	- -	GU90353029	1	
25	Tappet	-	-	-	- -	GU19045861	4	
26	Rocker arm rod	-	-	-	- -	GU31045000	4	
27	Roller	-	-	-	- -	GU95512035	1	
28	Safety washer	-	-	-	- -	GU23217800	2	

V 35 FLORIDA 350 1986-1990	GU059	00	TAB N.	29
CLUTCH				

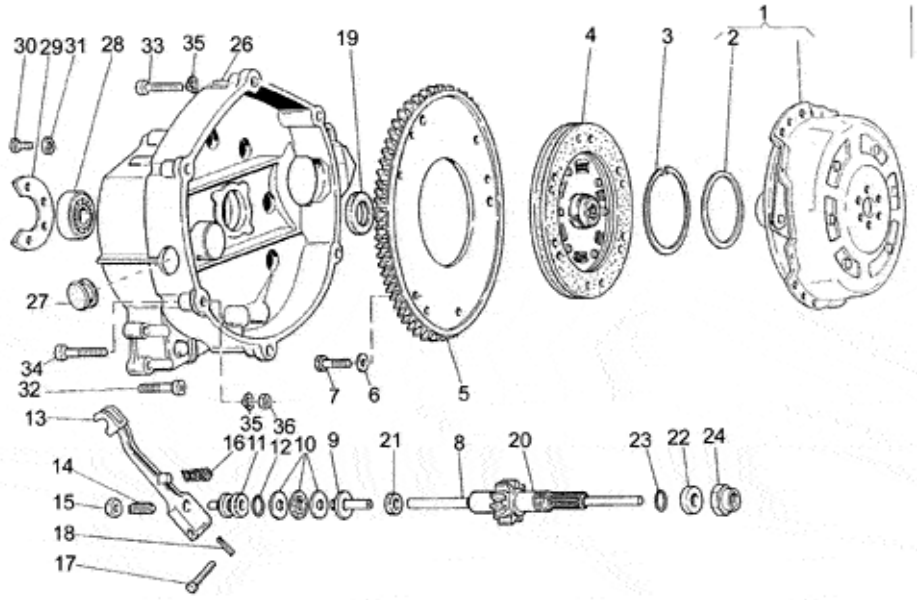

Pos.	Description	Year	I_M_	Country	Version	Code	Q.ty	P.Cod.
1	Clutch control	-	-	-	- -	GU19080161	1	
2	New cup type	-	-	-	- -	GU19083462	1	
3	Snap ring	-	-	-	- -	GU90272075	1	
4	Driven clutch disc	-	-	-	- -	GU27084420	1	
5	Chain ring MOTOPLAT	-	-	-	- -	GU19067900	1	
6	Washer 6,4x10x0,7	-	-	-	- -	GU14217901	6	
7	Hex screw M6X16	-	-	-	- -	GU98054316	6	
8	Rod	-	-	-	- -	GU20085720	1	
9	Inner body	-	-	-	- -	GU14086000	1	
10	Thrust bearing	-	-	-	- -	GU12087001	1	
11	Outer body	-	-	-	- -	GU14086100	1	
12	O-ring 17,13x2,62	-	-	-	- -	GU90706170	1	
13	Clutch relese shaft	-	-	-	- -	GU14090201	1	
14	Adjuster screw	-	-	-	- -	GU14090400	1	
15	Nut M8X1	-	-	-	- -	GU92602508	1	
16	Lever return spring	-	-	-	- -	GU94321105	1	
17	Pin 7x39	-	-	-	- -	GU95780271	1	
18	Split pin	-	-	-	- -	GU95500222	1	
19	Gasket ring 28x40x7	-	-	-	- -	GU90402841	1	
20	Transmission shaft Z=13	-	-	-	- -	GU19210720	1	
21	Gasket ring 6x16x7	-	-	-	- -	GU90400616	1	
22	Spacer	-	-	-	- -	GU19213720	1	
23	Gasket ring 18,77X1,78	-	-	-	- -	GU90706188	1	
24	Nut	-	-	-	- -	GU19356700	1	
26	Clutch drum	-	-	-	- -	GU31200401	1	
27	Plug	-	-	-	- -	GU93180220	1	
28	Bearing 20X47X14	-	-	-	- -	GU92201220	1	
29	Bearing fixing plate	-	-	-	- -	GU19203420	1	
30	Screw	-	-	-	- -	GU98054314	3	
31	Washer 6,4x10x0,7	-	-	-	- -	GU14217901	3	
32	Screw M6x30	-	-	-	- -	GU98610330	11	
33	Screw	-	-	-	- -	GU98610435	5	
34	Screw	-	-	-	- -	GU98610450	1	
35	Spring washer 8x15x0,3	-	-	-	- -	GU61270300	6	
36	Nut	-	-	-	- -	GU92601208	1	

Revente Interdite - Revendita Vietata - Resaling Forbiden - Wiederverkauf Verboten

V 35 FLORIDA 350 1986-1990	GU059	00	TAB N.	30
EXHAUST UNIT				

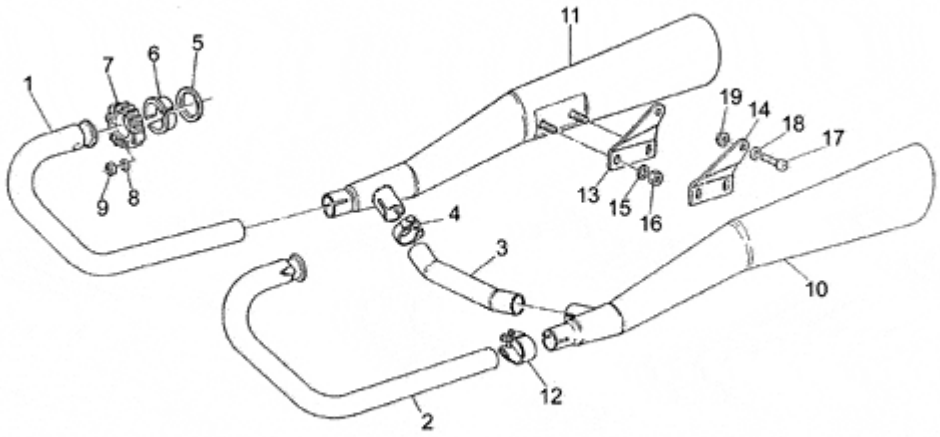

Pos.	Description	Year	I_M_	Country	Version	Code	Q.ty	P.Cod.
1	RH exhaust pipe	-	-	-	- -	GU23120712	1	
2	LH exhaust pipe	-	-	-	- -	GU23120713	1	
3	Pipe	-	-	-	- -	GU23121110	1	
4	Hose clamp	-	-	-	- -	GU23126910	2	
5	Gasket	-	-	-	- -	GU19025280	2	
6	Spacer	-	-	-	- -	GU61025400	4	
7	Exhaust ring nut	-	-	-	- -	GU19121050	2	
8	Special washer	-	-	-	- -	GU61013800	4	
9	Nut	-	-	-	- -	GU92701062	4	
10	LH silencer	-	-	-	- -	GU23122910	1	
11	RH silencer	-	-	-	- -	GU23123010	1	
12	Hose clamp	-	-	-	- -	GU14123400	2	
13	RH plate	-	-	-	- -	GU23128610	1	
14	LH plate	-	-	-	- -	GU23128710	1	
15	Spring washer 8x15x0,3	-	-	-	- -	GU61270300	4	
16	Nut M8X1,25	-	-	-	- -	GU92602208	4	
17	Screw	-	-	-	- -	GU98622420	2	
18	Washer 8,4X13X0,8	-	-	-	- -	GU14615901	4	
19	Nut	-	-	-	- -	GU92660008	2	

Revente Interdite - Revendita Vietata - Resaling Forbiden - Wiederverkauf Verboten

V 35 FLORIDA 350 1986-1990	GU059	00	TAB N.	31
OIL PUMP-FILTER				

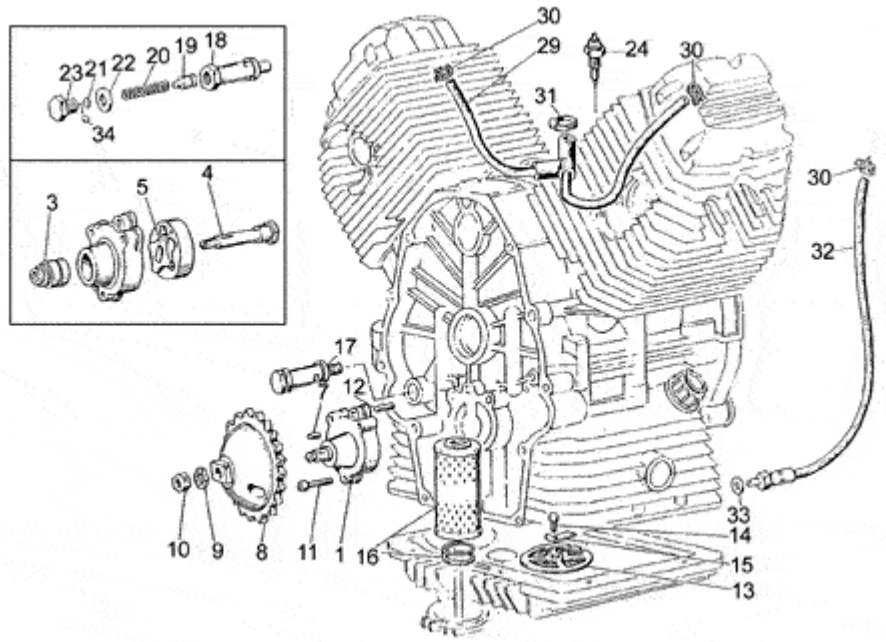

Pos.	Description	Year	I_M_	Country	Version	Code	Q.ty	P.Cod.
1	Oil pump	-	-	-	- -	GU19146422	1	
3	Roller bearing 10x22x20	-	-	-	- -	GU92252210	1	
4	Oil pump shaft assy.	-	-	-	- -	GU19147820	1	
5	Inner rotor	-	-	-	- -	GU19148420	1	
7	Guide roller	-	-	-	- -	GU92296726	1	
8	Oil pump gear	-	-	-	- -	GU19147721	1	
9	Washer 10,5x16x1	-	-	-	- -	GU19149800	1	
10	Nut M10x1,25	-	-	-	- -	GU92602510	1	
11	Screw M6X35	-	-	-	- -	GU98620335	3	
12	Pin	-	-	-	- -	GU19018920	2	
13	Oil filter	-	-	-	- -	GU19152200	1	
14	Screw	-	-	-	- -	GU98054314	1	
15	Plate	-	-	-	- -	GU95187006	1	
16	Oil filter	-	-	-	- -	GU19153000	1	
17	Oil valve cpl.	-	-	-	- -	GU10158201	1	
18	Valve body	-	-	-	- -	GU10158701	1	
19	Piston	-	-	-	- -	GU12150900	1	
20	Valve spring	-	-	-	- -	GU94321072	1	
21	Bottom	-	-	-	- -	GU12150700	1	
22	Washer 14,5X20X1	-	-	-	- -	GU95100523	3	
23	Plug	-	-	-	- -	GU12159000	1	
24	Pressure sensor	-	-	-	02201N -	GU31999581	1	
29	Breather pipe	-	-	-	- -	GU19159600	1	
30	Hose clamp	-	-	-	- -	GU61108400	3	
31	Hose clamp	-	-	-	- -	GU93305018	1	
32	Breather	-	-	-	- -	GU19159300	1	
33	Gasket 8,25x15x1	-	-	-	- -	GU12154200	1	
34	Ball	-	-	-	- -	GU92295911	1	

Revente Interdite - Revendita Vietata - Resaling Forbiden - Wiederverkauf Verboten

V 35 FLORIDA 350 1986-1990	GU059	00	TAB N.	32
TRANSMISSION CAGE				

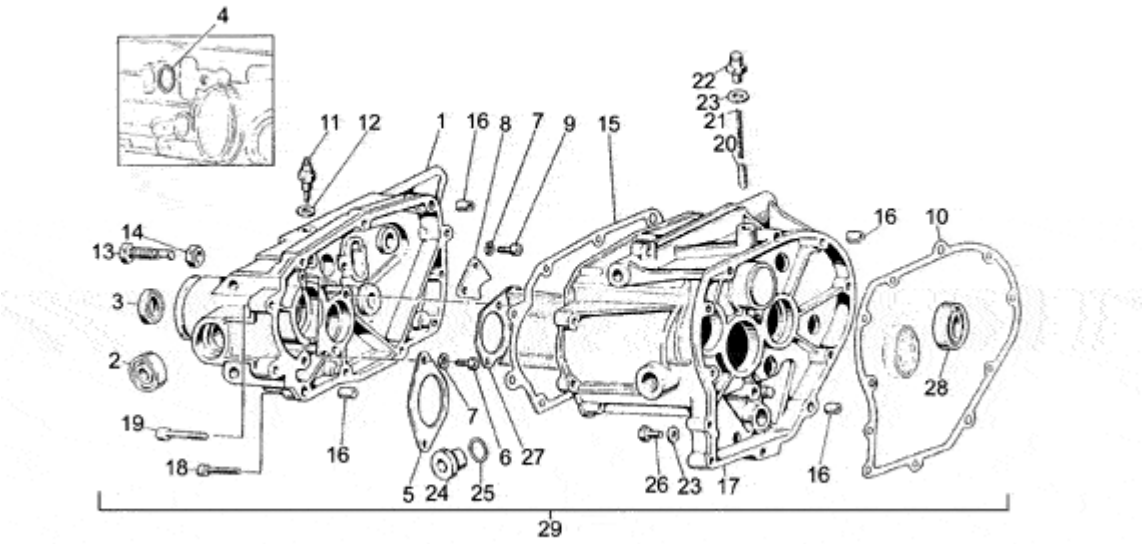

Pos.	Description	Year	I_M_	Country	Version	Code	Q.ty	P.Cod.
1	Box cover	-	-	-	- -	GU31200801	1	
2	Bearing 15x35x11	-	-	-	- -	GU92204215	2	
3	Gasket ring 28x40x7	-	-	-	- -	GU90402841	1	
4	O-ring 13,95x2,92	-	-	-	- -	GU90706140	1	
5	Plate	-	-	-	- -	GU19213820	1	
6	Screw	-	-	-	- -	GU98622314	4	
7	Washer 6,4x10x0,7	-	-	-	- -	GU14217901	6	
8	Plate	-	-	-	- -	GU19235800	1	
9	Screw	-	-	-	- -	GU98622314	2	
10	Gasket	-	-	-	- -	GU19200320	1	
11	Sensor	-	-	-	- -	GU19207220	1	
12	Gasket 8,25x15x1	-	-	-	- -	GU12154200	1	
13	Screw M12x1,25	-	-	-	- -	GU19237800	1	
14	Low nut M12x1,25	-	-	-	- -	GU92602512	1	
15	Gasket	-	-	-	- -	GU19201120	1	
16	Bush 6,6x9x13	-	-	-	- -	GU19002020	4	
17	Transmission cage	-	-	-	- -	GU31200201	1	
18	Screw M6x30	-	-	-	- -	GU98610330	7	
19	Screw	-	-	-	- -	GU98610435	4	
20	Pawl	-	-	-	- -	GU55234700	1	
21	Lever return spring	-	-	-	- -	GU94321067	1	
22	Breather plug	-	-	-	- -	GU31206500	1	
23	Gasket	-	-	-	- -	GU10528900	2	
24	Oil filler plug	-	-	-	- -	GU31351200	1	
25	O-ring 20,24X2,62	-	-	-	- -	GU90706203	1	
26	Oil level plug	-	-	-	- -	GU95980214	1	
27	Oil bulhead	-	-	-	- -	GU19208220	1	
28	Ball bearing 20x42x12	-	-	-	- -	GU92201120	1	
29	Gear box assy	-	-	-	- -	GU31991500	1	

Revente Interdite - Revendita Vietata - Resaling Forbiden - Wiederverkauf Verboten

V 35 FLORIDA 350 1986-1990	GU059	00	TAB N.	33
ACCESSORIES II				

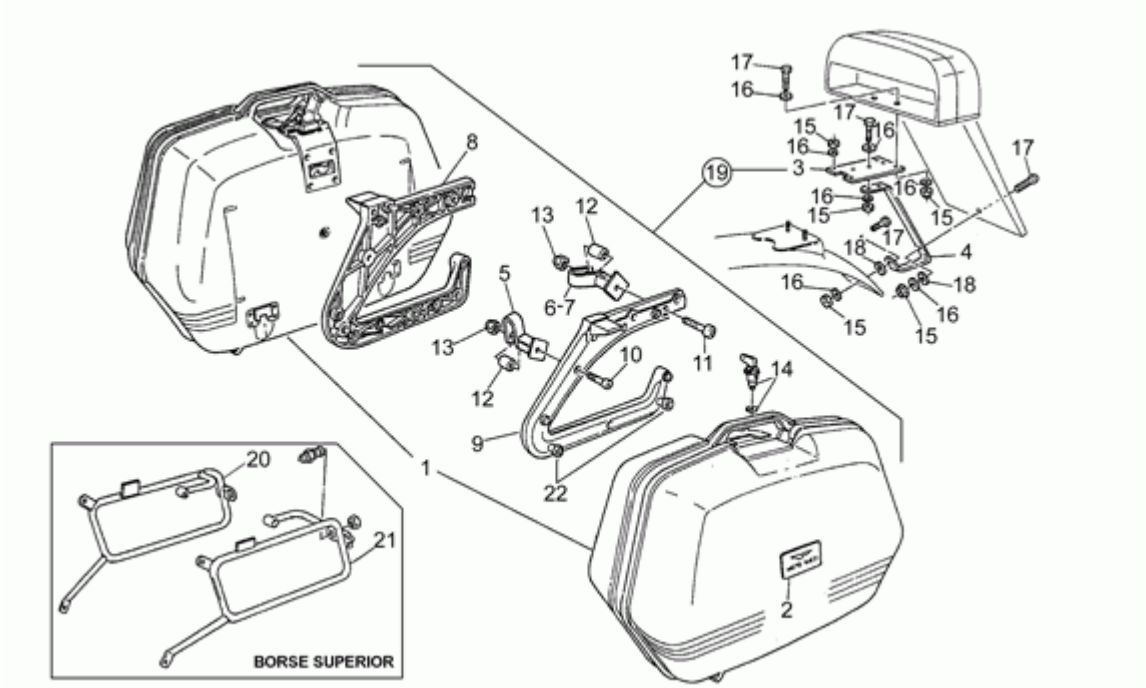

Pos.	Description	Year	I_M_	Country	Version		Code	Q.ty	P.Cod.
1	Hard saddlebag	-	-	-	-	-	GU23482572	2	
2	Name plate "Moto Guzzi"	-	-	-	-	-	GU29482060	2	
3	Plate	-	-	-	-	-	GU23475772	1	
4	U-bolt	-	-	-	-	-	GU23475572	1	
5	Front bracket	-	-	-	-	-	GU23481372	2	
6	RH rear bracket	-	-	-	-	-	GU23481272	1	
7	LH rear bracket	-	-	-	-	-	GU23481472	1	
8	RH support	-	-	-	-	-	GU30485010	1	
9	LH support	-	-	-	-	-	GU30486510	1	
10	Screw	-	-	-	-	-	GU98610450	2	
11	Screw	-	-	-	-	-	GU98610470	2	
12	Spacer	-	-	-	-	-	GU91180917	4	
13	Nut	-	-	-	-	-	GU92630108	4	
14	Lock	-	-	-	-	-	GU30489910	2	
15	Nut M6x1	-	-	-	-	-	GU92630106	7	
16	Washer	-	-	-	-	-	GU95000206	10	
17	Screw	-	-	-	-	-	GU98054318	5	
18	Rubber spacer	-	-	-	-	-	GU93110060	2	
19	Cases kit GIVI	-	-	-	-	-	GU23999272	1	
20	RH support	-	-	-	-	-	GU23485072	1	
21	LH support	-	-	-	-	-	GU23486572	1	
22	T bush	-	-	-	29095C	-	GU29530580	1	

PIAGGIO &C.s.p.a.

MOTO GUZZI

SPARE PARTS CATALOGUE



V 35 Carabinieri/PA 350 1990-1991

Chassis prefix: ZGUPD3007

Engine prefix:

Index

Products....3
Part reference....4
CHASSIS....10
Drawing 33.01 - Batterie....10
Drawing 33.02 - Sacs latéraux - paire....12
Drawing 33.03 - Carène....13
Drawing 33.04 - Carrosserie....14
Drawing 33.05 - Couple conique AR....16
Drawing 33.06 - Tableau de bord....19
Drawing 33.07 - Feu avant....21
Drawing 33.08 - Feu arrière....23
Drawing 33.09 - Filtre air....24
Drawing 33.10 - Fourche Av....25
Drawing 33.11 - Fourche arriere....27
Drawing 33.12 - Circuit electrique....28
Drawing 33.13 - Guidon....29
Drawing 33.14 - Garde-boue Av....30
Drawing 33.15 - Repose-pieds bequille....32
Drawing 33.16 - Pinces frein....34
Drawing 33.17 - Maît. cyl. frein AV....36
Drawing 33.18 - Pompe frein arrière....38
Drawing 33.19 - Roue Av....40
Drawing 33.20 - Roue arrière....41
Drawing 33.21 - Sirènes deux tons Sonora....42
Drawing 33.22 - Suspension avant/arriere....43
Drawing 33.23 - Chassis....44
Drawing 33.25 - Alimentation carburant....46
Drawing 33.32 - Groupe echappement....47
MOTEUR....48
Drawing 34.24 - Arbre moteur....48
Drawing 34.26 - Boîte de vitesses....49
Drawing 34.27 - Carburateurs....52
Drawing 34.28 - Carter moteur....54
Drawing 34.29 - Tête cylindre....56
Drawing 34.30 - Distribution....57
Drawing 34.31 - Embrayage....59
Drawing 34.33 - Pompe huile-filtre....61
Drawing 34.34 - Carter de boîte vitesses....63

Products

Code	Validity
no products	

Code	Drawing Nr.	Pos.
0000000	33.01	1
0000000	34.27	19
0000000	34.27	2
0000000	34.27	26
0000000	34.27	29
0000000	34.27	33
0000000	34.27	37
0000000	34.27	39
0000000	34.27	9
GU00823923140	33.09	25
GU00823933090	33.07	5
GU00823944050	33.09	4
GU00823950050	33.18	24
GU10054100	34.26	12
GU10054100	34.26	60
GU10154200	34.28	39
GU10158201	34.33	15
GU10158701	34.33	29
GU10528900	33.05	11
GU10528900	33.05	9
GU10528900	34.28	22
GU10528900	34.34	23
GU10934400	34.27	38
GU10934900	34.27	34
GU12003702	34.28	30
GU12022600	33.05	6
GU12022600	34.34	24
GU12087001	34.31	10
GU12150700	34.33	24
GU12150900	34.33	28
GU12154200	33.09	24
GU12154200	34.28	33
GU12154200	34.34	12
GU12159000	34.33	23
GU12433000	33.15	38
GU12434001	33.15	11
GU12629800	34.26	45
GU12717600	33.13	29
GU12717600	33.25	21
GU12735100	33.16	11
GU12937200	34.27	20
GU12937300	34.27	6
GU13021900	34.28	36
GU13021900	34.29	12
GU13432640	33.15	10
GU13432640	33.15	37
GU13432761	33.15	33
GU13433440	33.15	29
GU13932800	34.27	16
GU13932900	34.27	17
GU13933100	34.27	36
GU13933700	34.27	41
GU13934600	34.27	32
GU13936200	34.27	12
GU13936300	34.27	13
GU13936600	34.27	14
GU13936700	34.27	15
GU13937800	34.27	11
GU13937900	34.27	7
GU14086000	34.31	9
GU14086100	34.31	11
GU14090201	34.31	13
GU14090400	34.31	14
GU141040551	33.04	3
GU14105100	33.04	11
GU14107100	33.23	25
GU14217901	34.31	31
GU14217901	34.31	6
GU14217901	34.34	7
GU14251001	33.18	2
GU14251001	34.26	55
GU14461400	33.23	42
GU14474650	33.14	16
GU14494600	33.22	3
GU14516700	33.22	4
GU14517000	33.22	5
GU14547800	33.11	14
GU14609650	33.01	36
GU14609650	33.09	5
GU14609650	33.12	18
GU14609650	33.13	35
GU14609650	33.16	15
GU14609650	33.23	26
GU14609650	33.25	20
GU14610370	33.19	1
GU14615901	33.05	29
GU14615901	33.11	20
GU14615901	34.24	18
GU14616150	33.19	10
GU14616150	33.20	11
GU14634400	33.20	8
GU14657050	33.16	10
GU14707000	33.01	2
GU14717400	33.01	17
GU14717600	33.01	5
GU14730570	33.01	40
GU14736856	33.04	4
GU14756255	33.07	4
GU14768650	33.06	7
GU14917300	33.04	10
GU17113450	33.09	12
GU17113651	33.09	13
GU17114050	33.09	14
GU17114650	33.09	3
GU17451750	33.03	23
GU17500200	33.10	37
GU17573860	33.16	14
GU17615360	33.19	3
GU17658260	33.17	7
GU17658360	33.17	6
GU17658860	33.16	16
GU17659350	33.18	30
GU17661052	33.18	23
GU17726680	33.07	22
GU17726680	33.08	12
GU17737983	33.21	6
GU17750520	33.12	12
GU17751100	33.13	28
GU17762200	33.06	10
GU17768360	33.06	9
GU17937450	34.27	8
GU18105001	33.04	5
GU18144350	34.33	16
GU18161150	34.33	21
GU18252050	33.15	4
GU18257551	33.18	7
GU18257950	34.26	44
GU18258101	34.26	62
GU18432760	33.15	28
GU18513460	33.10	6
GU18513560	33.10	2
GU18516660	33.10	10
GU18577850	33.03	5
GU18745701	33.06	15
GU19000120	34.28	1
GU19001200	34.28	15
GU19001420	34.28	14
GU19002020	34.28	9
GU19002020	34.34	16
GU19003400	34.28	26
GU19003602	34.28	20
GU19003800	34.28	8
GU19007700	33.01	33
GU19007700	34.28	41
GU19015020	34.28	5
GU19016320	34.28	10
GU19017000	33.15	31
GU19017120	34.28	17
GU19018920	34.33	10
GU19021320	34.29	18
GU19021920	34.29	7
GU19022120	34.29	1
GU19022220	34.29	2
GU19023520	34.29	9
GU19023700	34.29	10
GU19025280	33.32	5
GU19025300	34.29	6
GU19027500	34.30	15
GU19030500	34.30	7
GU19032000	34.30	10
GU19032300	34.30	11
GU19032980	34.29	26
GU19032980	34.30	14
GU19034000	34.30	8
GU19036021	34.30	1
GU19037820	34.29	8
GU19045020	34.30	26
GU19045861	34.30	25
GU19054521	34.30	17
GU19055700	34.30	23
GU19058021	34.30	19
GU19058220	34.30	20
GU19060121	34.29	17
GU19060421	34.24	10
GU19060600	34.24	15
GU19060700	34.24	11
GU19061000	34.24	12
GU19061220	34.24	13
GU19061320	34.24	14
GU19061521	34.24	3
GU19061821	34.24	16
GU19062022	34.24	6
GU19062221	34.24	4
GU19064121	34.24	1
GU19065400	34.24	2
GU19065623	34.24	7
GU19066522	34.24	8
GU19067700	34.24	17
GU19067900	34.31	5
GU19080161	34.31	1
GU19083462	34.31	2
GU191002051	33.04	1
GU19100215	33.04	1
GU19102750	33.04	14
GU19104015	33.04	3
GU19104336	33.04	7
GU19104950	33.04	6
GU19112615	33.25	1
GU19112616	33.25	2
GU19113900	33.09	8
GU19114300	33.09	1

Code	Drawing Nr.	Pos.
GU19114320	33.25	10
GU19114400	33.25	13
GU19115035	33.25	3
GU19115036	33.25	4
GU19115520	33.25	5
GU19120706	33.32	2
GU19120707	33.32	1
GU19121050	33.32	7
GU19121135	33.32	3
GU19122936	33.32	10
GU19123036	33.32	11
GU19123435	33.32	12
GU19128660	33.32	13
GU19128760	33.32	14
GU19146420	34.33	1
GU19147721	34.33	17
GU19147820	34.33	4
GU19148420	34.33	5
GU19149800	34.33	18
GU19152200	34.33	11
GU19155775	33.09	6
GU19156001	33.09	11
GU19156701	33.09	7
GU19156900	33.09	10
GU19157800	33.18	25
GU19200222	34.34	17
GU19200422	34.31	26
GU19200821	34.34	1
GU19201120	34.34	15
GU19202320	34.34	29
GU19203420	34.31	29
GU19206501	33.05	10
GU19206501	34.34	22
GU19207220	34.34	11
GU19208220	34.34	27
GU19210520	34.26	1
GU19211320	34.26	8
GU19211420	34.26	6
GU19211820	34.26	5
GU19212020	34.26	2
GU19212800	34.26	9
GU19212900	34.26	15
GU19213620	34.26	14
GU19213720	34.26	17
GU19213720	34.31	22
GU19213820	34.34	5
GU19214001	34.26	24
GU19214320	34.26	63
GU19214501	34.26	20
GU19214620	34.26	7
GU19214820	34.26	21
GU19215121	34.26	22
GU19215220	34.26	23
GU19215420	34.26	3
GU19231020	34.26	35
GU19231220	34.26	34
GU19234420	34.26	30
GU19234600	34.26	31
GU19235800	34.34	8
GU19237800	34.34	13
GU19252900	34.26	54
GU19256920	34.26	51
GU19257701	34.26	28
GU19258220	34.26	41
GU19266720	34.26	58
GU19327601	33.11	5
GU19327701	33.11	2
GU19328801	33.11	3
GU19350220	33.11	21
GU19350322	33.05	1
GU19350421	33.05	13
GU19350700	33.05	22
GU19351100	33.05	4
GU19351402	33.05	16
GU19351900	33.05	2
GU19352300	33.05	23
GU19352401	33.05	31
GU19353500	33.05	24
GU19354621	33.05	18
GU19355121	33.05	34
GU19355200	33.05	35
GU19355202	33.05	36
GU19355300	33.05	33
GU19355300	34.26	32
GU19355301	33.05	33
GU19355302	33.05	33
GU19355303	33.05	33
GU19355304	33.05	33
GU19355305	33.05	33
GU19355306	33.05	33
GU19355307	33.05	33
GU19355308	33.05	33
GU19355309	33.05	33
GU19355320	33.05	44
GU19355321	33.05	44
GU19355322	33.05	44
GU19355323	33.05	44
GU19355324	33.05	44
GU19355325	33.05	44
GU19355326	33.05	44
GU19355327	33.05	44
GU19355328	33.05	44
GU19355329	33.05	44
GU19355400	33.05	21
GU19355402	33.05	21
GU19355404	33.05	21
GU19355406	33.05	21
GU19355408	33.05	21
GU19355410	33.05	21
GU19355411	33.05	21
GU19355412	33.05	21
GU19355413	33.05	21
GU19356320	33.05	19
GU19356700	33.05	39
GU19356700	34.31	24
GU19356801	33.05	37
GU19357660	33.05	25
GU19400115	33.23	1
GU19418200	33.23	7
GU19420315	33.15	5
GU19422115	33.15	6
GU19432016	33.15	26
GU19434000	33.23	41
GU19434069	33.15	27
GU19434315	33.14	21
GU194344151	33.14	21
GU19436500	33.16	13
GU19437015	33.14	8
GU19451515	33.02	19
GU19451525	33.02	20
GU19476215	33.04	15
GU194762501	33.04	15
GU19476315	33.04	16
GU194763501	33.04	16
GU19478150	33.04	17
GU19478250	33.04	18
GU19478550	33.04	19
GU19478750	33.04	20
GU19490215	33.22	1
GU19494015	33.10	1
GU19500715	33.10	39
GU19502315	33.06	12
GU19522515	33.10	11
GU19522615	33.10	12
GU19529660	33.10	29
GU19547000	33.11	12
GU19570315	33.03	11
GU195703151	33.03	11
GU19570415	33.03	12
GU195704151	33.03	12
GU19575415	33.03	1
GU19632501	33.20	2
GU19632502	33.20	3
GU19633935	33.20	6
GU19634100	33.20	12
GU19635736	33.05	28
GU19636400	33.20	10
GU19652700	33.16	18
GU19652700	33.17	11
GU19654900	33.16	5
GU19658660	33.16	7
GU19658735	33.16	12
GU19659500	33.18	28
GU19659600	33.18	29
GU19667500	33.18	14
GU19667600	33.18	15
GU19668000	33.16	6
GU19675000	33.18	6
GU19677000	33.18	1
GU19704800	33.01	4
GU19705900	33.02	4
GU19705900	33.14	7
GU19705900	33.23	10
GU19707100	33.01	35
GU19718000	33.25	17
GU19732500	33.12	11
GU19733350	33.01	38
GU19738015	33.13	2
GU19743615	33.21	1
GU19743616	33.21	2
GU19747115	33.12	1
GU19747335	33.12	17
GU19748000	33.01	34
GU19750315	33.13	3
GU19768680	33.06	18
GU19782315	33.06	28
GU19922000	33.04	21
GU19934960	34.27	30
GU19935500	34.27	27
GU19937715	34.27	22
GU19938880	34.27	4
GU19941715	33.03	18
GU19999020	34.28	35
GU19999580	34.28	34
GU20085720	34.31	8
GU20208520	34.26	40
GU20527620	33.10	14
GU20630620	33.20	1
GU20999520	34.26	38
GU23026100	34.30	2
GU23093070	33.13	34

Code	Drawing Nr.	Pos.
GU23093870	33.13	30
GU23093870	33.17	9
GU23105370	33.04	13
GU23105470	33.04	12
GU23117730	33.13	33
GU23159670	33.09	19
GU23200370	34.34	10
GU23217800	34.30	28
GU23328081	33.11	7
GU23401290	33.23	14
GU23401390	33.23	15
GU23430391	33.15	9
GU23438510	33.14	29
GU23438690	33.14	1
GU23439010	33.14	28
GU23439190	33.23	22
GU23439210	33.14	30
GU23439290	33.23	23
GU23460590	33.04	23
GU23463690	33.23	39
GU23466890	33.04	42
GU234726901	33.04	30
GU23478890	33.23	37
GU23493140	33.10	7
GU23525470	33.10	17
GU23526370	33.10	33
GU23526470	33.10	19
GU23526610	33.10	20
GU23526910	33.10	22
GU23527910	33.10	35
GU23548080	33.11	8
GU23548180	33.11	9
GU23555280	33.22	8
GU23555281	33.22	7
GU23633380	33.20	7
GU23653011	33.16	1
GU23655770	33.17	23
GU23659310	33.17	16
GU23661110	33.17	15
GU23721493	33.12	14
GU23736891	33.02	18
GU23736891	33.04	47
GU23753710	33.07	9
GU25656100	33.16	9
GU25656100	33.17	5
GU25936000	34.27	25
GU27001136	34.28	25
GU27001636	34.28	24
GU27003585	34.28	19
GU27004985	34.28	28
GU27020820	34.29	24
GU27022020	34.29	19
GU27045420	34.30	27
GU27053362	34.30	16
GU27053463	34.30	16
GU27084420	34.31	4
GU27114120	33.09	15
GU27133515	33.25	16
GU27152885	34.28	32
GU27153085	34.33	14
GU27153460	33.09	18
GU27159360	33.09	22
GU27210710	34.31	20
GU27211110	34.26	57
GU27436920	33.14	22
GU27499120	33.10	31
GU27654610	33.16	20

Code	Drawing Nr.	Pos.
GU27654610	33.17	17
GU27710435	33.12	16
GU27721037	33.01	29
GU27721063	33.01	29
GU27723835	33.12	15
GU27740985	33.08	1
GU27760410	33.06	11
GU27761535	33.06	3
GU27766985	33.06	20
GU27917520	33.03	3
GU27935960	34.27	28
GU27991035	34.28	42
GU27991535	34.34	30
GU28103946	33.04	2
GU28108410	33.04	46
GU28117533	33.13	22
GU28132833	33.25	15
GU28157450	33.09	23
GU28238261	34.26	39
GU28252060	33.15	4
GU28436460	33.14	27
GU28439845	33.04	32
GU28439846	33.04	33
GU28440760	33.15	21
GU28441860	33.15	22
GU28443201	33.15	25
GU28460945	33.04	24
GU28461300	33.04	26
GU28461345	33.04	25
GU28462645	33.23	30
GU28462945	33.23	28
GU28463045	33.23	27
GU28463545	33.23	33
GU28464301	33.04	38
GU28471845	33.04	40
GU28471945	33.04	41
GU28472545	33.04	35
GU28472680	33.04	30
GU28478645	33.04	39
GU28479945	33.04	34
GU28482580	33.02	1
GU28483946	33.02	3
GU28485045	33.02	5
GU28485780	33.02	2
GU28486545	33.02	6
GU28486880	33.02	23
GU28489945	33.02	17
GU28500745	33.10	38
GU28504047	33.13	36
GU28526540	33.10	36
GU28527540	33.10	21
GU28556250	33.10	26
GU28556350	33.10	28
GU28556450	33.10	25
GU28584845	33.02	11
GU28613300	33.19	4
GU28614100	33.19	7
GU28617760	33.19	12
GU28617760	33.20	13
GU28659740	33.14	23
GU28703800	33.01	18
GU28712400	33.01	13
GU28712459	33.01	19
GU28712500	33.01	11
GU28726147	33.21	12
GU28726301	33.12	5
GU28726581	33.07	21

Code	Drawing Nr.	Pos.
GU28726780	33.08	11
GU28726881	33.08	10
GU28726981	33.07	31
GU28732545	33.08	14
GU28732545	33.21	13
GU28732946	33.08	15
GU28732946	33.21	14
GU28736780	33.21	5
GU28737680	33.21	3
GU28737880	33.21	4
GU28740560	33.07	1
GU28742560	33.12	4
GU28743760	33.07	14
GU28743761	33.07	15
GU28750981	33.08	13
GU28751647	33.08	7
GU28753747	33.08	8
GU28769847	33.03	10
GU28787247	33.12	19
GU28923400	33.04	31
GU28999263	33.22	6
GU29106500	33.04	45
GU29132050	33.13	24
GU29132350	33.13	26
GU29132650	33.13	27
GU29132750	33.25	22
GU29133250	33.13	25
GU29433850	33.15	42
GU29603050	33.13	7
GU29603550	33.13	11
GU29605550	33.13	6
GU29608750	33.13	5
GU29660250	33.17	1
GU29722270	33.01	26
GU29726450	33.12	6
GU29731460	33.06	24
GU29732550	33.12	8
GU29747260	33.12	2
GU29752150	33.15	41
GU29766260	33.06	1
GU29767260	33.06	4
GU29781160	33.06	19
GU29783061001	33.06	5
GU29784960	33.06	6
GU29999250	33.13	12
GU30600310	33.13	1
GU30607910	33.13	23
GU30607910	33.25	14
GU30657110	33.17	3
GU30730711	33.01	39
GU30732510	33.12	13
GU30743000	33.12	3
GU30750610	33.07	8
GU30751410	33.07	11
GU30753310	33.06	33
GU30782511	33.06	21
GU30787310	33.12	20
GU31016065	34.33	20
GU31066480	34.24	9
GU31158250	34.33	15
GU31436415	33.14	26
GU31524550	33.10	18
GU31540280	33.11	1
GU31570840	33.03	19
GU31573540	33.03	16
GU31573640	33.03	17
GU31577240	33.03	2

Code	Drawing Nr.	Pos.
GU31578640	33.03	13
GU31616315	33.19	6
GU31652265	33.16	17
GU31652365	33.17	10
GU31654665	33.16	20
GU31654665	33.17	17
GU31654765	33.16	25
GU31654765	33.17	8
GU31659165	33.16	23
GU31659165	33.17	19
GU31659265	33.16	24
GU31659265	33.17	20
GU31666990	33.18	13
GU31716560	33.01	7
GU31717060	33.01	14
GU31722140	33.12	7
GU31762561	33.19	13
GU31764140	33.06	2
GU31999581	34.33	8
GU35214300	33.11	13
GU35214300	34.26	26
GU35782880	33.23	32
GU39103400	33.23	24
GU39103500	33.23	18
GU39238100	34.26	11
GU39238100	34.26	59
GU39654700	33.16	25
GU39654700	33.17	8
GU39659000	33.16	22
GU39659000	33.17	18
GU39659100	33.16	23
GU39659100	33.17	19
GU39741101	33.13	10
GU39922200	33.04	22
GU39935701	34.27	40
GU39937600	34.27	10
GU39939900	34.27	1
GU41432100	33.23	38
GU45212400	33.03	6
GU49938900	34.27	5
GU53429500	33.15	30
GU53935000	34.27	18
GU53937100	34.27	21
GU53937200	34.27	3
GU55234700	34.34	20
GU55938585	34.27	23
GU61013800	33.25	9
GU61013800	33.32	8
GU61013800	34.26	52
GU61025400	33.32	6
GU61027200	34.29	23
GU61036801	34.29	3
GU61037000	34.30	13
GU61037500	34.30	4
GU61037600	34.30	3
GU61038000	34.30	5
GU61038100	34.30	6
GU61054900	34.30	18
GU61108400	33.09	21
GU61126920	33.32	4
GU61127220	33.32	21
GU61127520	33.32	20
GU61238200	34.26	39
GU61270300	33.05	26
GU61270300	33.15	45
GU61270300	33.16	3
GU61270300	33.17	14
GU61270300	33.23	13
GU61270300	33.32	15
GU61270300	34.28	6
GU61270300	34.29	21
GU61270300	34.31	35
GU61609630	33.09	26
GU61609630	33.13	35
GU61934300	34.27	35
GU61934800	34.27	24
GU62616800	33.19	11
GU65659200	33.16	24
GU65659200	33.17	20
GU65663500	33.18	21
GU65758970	33.06	16
GU66659031	33.16	22
GU66659031	33.17	18
GU70403547	33.05	3
GU73934000	34.27	31
GU90201220	34.31	28
GU90271003	33.18	9
GU90271018	34.30	12
GU90271020	34.26	33
GU90271115	34.26	29
GU90271121	34.26	19
GU90271220	34.26	4
GU90272023	33.11	4
GU90272075	34.31	3
GU90280006	33.23	31
GU90353009	34.29	4
GU90353029	34.30	24
GU90353030	33.05	17
GU90400616	34.31	21
GU90401530	34.28	11
GU90402840	34.28	18
GU90402841	34.31	19
GU90402841	34.34	3
GU90403247	33.05	41
GU90403857	33.10	13
GU90405367	34.28	13
GU90407590	33.05	15
GU90706076	34.29	25
GU90706092	33.14	25
GU90706094	33.10	32
GU90706111	34.33	22
GU90706140	34.34	4
GU90706170	34.31	12
GU90706188	33.05	38
GU90706188	34.26	18
GU90706188	34.31	23
GU90706203	33.05	7
GU90706203	34.34	25
GU90706282	33.10	27
GU90706282	34.28	29
GU90706315	33.25	12
GU90706444	34.28	27
GU90706552	33.05	40
GU90706552	33.09	9
GU90716057	33.14	18
GU90716067	33.08	5
GU91180605	33.07	17
GU91180607	33.07	27
GU91180607	33.14	14
GU91180626	33.07	12
GU91180705	33.18	31
GU91180721	33.01	9
GU91180810	33.23	40
GU91181016	33.10	5
GU91181112	33.23	45
GU91181114	33.15	13
GU91181407	33.22	9
GU91182010	34.26	40
GU91551085	33.07	28
GU91551085	33.14	13
GU91551092	33.14	11
GU92201070	33.05	14
GU92201120	34.34	28
GU92201220	34.26	13
GU92201220	34.26	16
GU92201415	34.26	10
GU92201415	34.26	27
GU92204215	34.34	2
GU92204217	33.20	5
GU92204218	33.20	4
GU92204221	33.19	2
GU92249220	33.05	32
GU92249223	33.05	20
GU92249225	33.22	2
GU92252210	34.33	3
GU92252235	33.05	5
GU92295911	34.33	25
GU92296726	34.33	7
GU92297909	34.26	36
GU92601206	33.13	20
GU92602108	33.15	24
GU92602205	33.07	6
GU92602205	33.15	43
GU92602206	33.02	10
GU92602206	33.15	7
GU92602206	33.18	20
GU92602208	33.01	15
GU92602208	33.02	14
GU92602208	33.05	43
GU92602208	33.16	4
GU92602208	33.23	43
GU92602208	33.32	16
GU92602208	34.28	7
GU92602208	34.31	36
GU92602210	33.11	18
GU92602210	33.15	3
GU92602210	33.23	3
GU92602308	33.10	34
GU92602316	33.20	9
GU92602406	34.30	9
GU92602410	33.22	13
GU92602410	33.32	19
GU92602508	33.15	44
GU92602508	34.31	15
GU92602510	34.33	19
GU92602512	34.34	14
GU92602516	33.19	9
GU92603010	34.29	11
GU92630104	33.07	24
GU92630104	33.17	22
GU92630104	33.21	11
GU92630105	33.14	20
GU92630106	33.06	27
GU92630106	33.08	18
GU92630106	33.14	6
GU92630106	33.23	19
GU92630106	34.26	61
GU92630206	33.07	19
GU92630206	33.08	6
GU92630207	33.03	8
GU92630508	33.02	24

Code	Drawing Nr.	Pos.
GU92630510	33.15	16
GU92660501	33.01	16
GU92660601	33.23	11
GU92670305	33.09	17
GU92690073	33.18	8
GU92701062	33.32	9
GU92781062	33.07	30
GU92781081	33.11	19
GU92781100	33.10	30
GU92781100	33.15	32
GU93110060	33.02	9
GU93110060	33.08	4
GU93110060	33.14	3
GU93110082	33.14	9
GU93180105	33.11	11
GU93180220	34.31	27
GU93180245	34.29	22
GU93180706	33.02	15
GU93301175	33.08	19
GU93305018	33.09	20
GU93305031	33.25	11
GU93305074	33.11	10
GU93305092	33.09	2
GU93450119	33.07	3
GU93450120	33.06	8
GU93450127	33.07	10
GU93450127	33.08	9
GU93450140	33.06	17
GU93450224	33.08	2
GU93450232	33.07	2
GU94321067	34.34	21
GU94321072	34.33	27
GU94321099	33.11	6
GU94321105	34.31	16
GU94321119	33.23	29
GU94322215	33.15	14
GU95000204	33.21	10
GU95000205	33.01	25
GU95000206	33.04	37
GU95000206	33.06	26
GU95000206	33.07	18
GU95000206	33.07	29
GU95000206	33.08	17
GU95000206	33.14	4
GU95000206	33.18	18
GU95000208	33.06	22
GU95000208	33.06	30
GU95000208	33.10	40
GU95000210	33.15	15
GU95001206	33.03	7
GU95004205	33.25	18
GU95004206	33.14	10
GU95004206	33.18	16
GU95004206	33.23	17
GU95004206	33.23	34
GU95004208	33.01	20
GU95004208	33.03	25
GU95004208	33.06	32
GU95004208	33.23	9
GU95004210	33.11	17
GU95004210	33.15	2
GU95004210	33.23	2
GU95004210	33.23	21
GU95004215	33.18	4
GU95004217	33.19	8
GU95007205	33.03	22
GU95007208	33.06	14
GU95007210	33.10	4
GU95020108	33.02	21
GU95021105	33.01	30
GU95021105	33.07	7
GU95021106	33.02	16
GU95021106	33.04	29
GU95021106	33.18	19
GU95021106	34.26	43
GU95021108	33.02	13
GU95021108	33.03	15
GU95021108	33.15	34
GU95021108	33.21	16
GU95021110	33.22	11
GU95021110	33.32	18
GU95100059	33.07	20
GU95100059	33.09	16
GU95100059	33.12	10
GU95100059	33.14	19
GU95100059	33.18	27
GU95100059	33.21	8
GU95100116	33.10	16
GU95100116	33.25	7
GU95100118	33.14	32
GU95100139	33.04	28
GU95100141	33.02	8
GU95100141	33.07	26
GU95100141	33.14	5
GU95100235	33.22	10
GU95100250	33.16	21
GU95100250	33.17	13
GU95100251	33.16	21
GU95100251	33.17	13
GU95100523	34.33	26
GU95100709	34.28	31
GU95120105	33.23	6
GU95129100	33.04	9
GU95129110	33.18	11
GU95129110	34.26	47
GU95129115	34.30	22
GU95129180	33.04	43
GU95129180	34.28	38
GU95129180	34.29	13
GU95129260	33.18	3
GU95129260	34.26	56
GU95187006	34.33	13
GU95500222	33.18	12
GU95500222	34.26	49
GU95500222	34.31	18
GU95500227	33.18	5
GU95520316	34.26	37
GU95602206	34.26	46
GU95770265	33.18	10
GU95770265	34.26	50
GU95780271	34.31	17
GU95980119	34.28	40
GU95980214	33.05	8
GU95980214	34.28	21
GU95980214	34.34	26
GU95990028	33.16	8
GU96451430	34.28	3
GU96451560	34.28	2
GU96506042	34.29	5
GU96508055	33.05	12
GU96508055	34.28	4
GU96508107	34.29	20
GU96510125	34.29	15
GU96510182	34.29	14
GU97260425	33.06	29
GU98052220	33.14	17
GU98052325	34.26	42
GU98052435	33.01	37
GU98052440	33.15	35
GU98052555	33.23	35
GU98052565	33.15	1
GU98053435	33.15	23
GU98054210	33.04	8
GU98054212	33.21	7
GU98054214	33.25	19
GU98054216	33.12	9
GU98054216	33.15	40
GU98054216	33.18	26
GU98054312	33.14	31
GU98054314	34.31	30
GU98054314	34.33	12
GU98054316	33.04	27
GU98054316	33.07	16
GU98054316	33.23	16
GU98054316	34.31	7
GU98054318	33.07	25
GU98054318	33.23	36
GU98054320	33.02	7
GU98054320	33.14	2
GU98054322	33.15	8
GU98054330	33.18	17
GU98054416	33.15	36
GU98054416	33.21	15
GU98054416	33.23	12
GU98054418	33.05	30
GU98054418	33.23	8
GU98054420	33.03	24
GU98054530	33.15	12
GU98054535	33.32	17
GU98072555	33.10	3
GU98074320	33.08	16
GU98074418	33.06	13
GU98110199	33.23	20
GU98200412	33.21	9
GU98202420	33.07	23
GU98202516	33.03	20
GU98202520	33.01	21
GU98202520	33.03	21
GU98230825	33.19	5
GU98230845	33.14	24
GU98250625	33.03	4
GU98250630	33.03	9
GU98260425	33.13	4
GU98280410	33.13	13
GU98280410	33.17	21
GU98280616	33.04	36
GU98290512	33.01	24
GU98310610	33.25	6
GU98326021	33.06	25
GU98610445	33.02	22
GU98610540	33.10	8
GU98612316	33.13	21
GU98612535	33.10	9
GU98620240	33.01	8
GU98620250	33.01	32
GU98620330	34.28	37
GU98620330	34.31	32
GU98620330	34.34	18
GU98620335	34.28	23
GU98620335	34.33	9
GU98620435	33.06	31

Code	Drawing Nr.	Pos.
GU98620435	34.31	33
GU98620435	34.34	19
GU98620440	34.31	37
GU98620450	34.31	34
GU98620455	33.22	14
GU98620540	33.23	44
GU98620545	33.11	16
GU98622314	34.34	6
GU98622314	34.34	9
GU98622318	33.01	27
GU98622320	33.10	15
GU98622325	34.28	16
GU98622325	34.29	16
GU98622422	33.16	19
GU98622422	33.16	2
GU98622422	33.17	12
GU98622425	33.17	4
GU98622525	33.23	5
GU98622530	33.10	24
GU98622545	33.10	23
GU98812216	33.17	2
GU98822316	34.30	21
GU98822325	33.25	8
GU98822414	33.03	14
GU98822416	33.22	12
GU99210445	33.07	13

Assembly	CHASSIS
Code	33.01
Description	Batterie
Revision	1

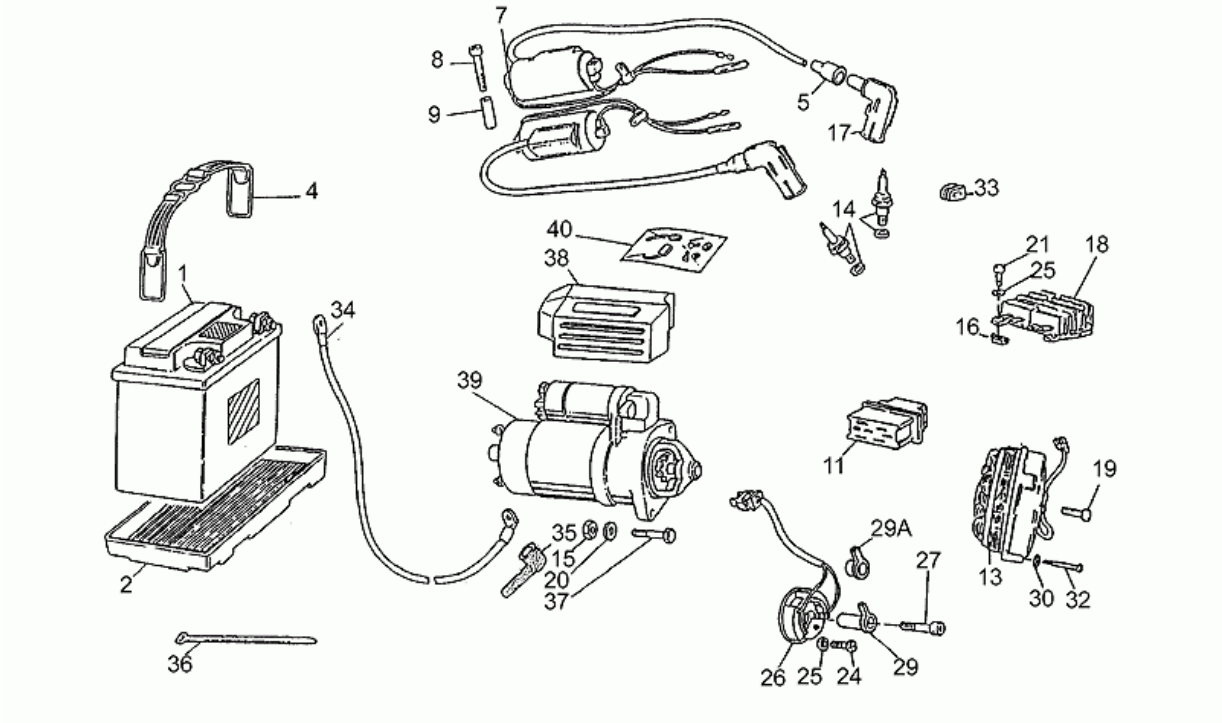

Pos.	Code	Description	Q.ty	Variants
1	0000000	Pneu s. chambre 110/90"	1	**Spécifications techniques:**Fiamm 6IF5P 12V-32Ah[F]
2	GU14707000	Cuve	1	
4	GU19704800	Bride	1	
5	GU14717600	Capuchon	2	
7	GU31716560	Bobine HT	2	
8	GU98620240	Vis	4	
9	GU91180721	Entretoise	4	
11	GU28712500	Connecteur SAPRISA	1	
13	GU28712400	Alternateur SAPRISA	1	
14	GU31717060	Bougie NGK B8ES	2	
15	GU92602208	Ecrou M8X1,25	4	
16	GU92660501	Ecrou en cage	4	
17	GU14717400	Pipe bougie	2	
18	GU28703800	Régulateur de tension SAPRISA	1	
19	GU28712459	Vis	1	
20	GU95004208	Rondelle	2	
21	GU98202520	Vis	2	
24	GU98290512	Vis	2	
25	GU95000205	Rondelle	6	
26	GU29722270	Capteur phase/tours	1	
27	GU98622318	Vis M6X18	1	
29	GU27721037	Rotor	1	**Spécifications techniques:**Jusq'au moteur PC51197[M1]
29	GU27721063	Rotor	1	**Spécifications techniques:**A' partir du moteur PC51198[M2]
30	GU95021105	Rondelle évent.	3	
32	GU98620250	Vis	3	
33	GU19007700	Caoutchouc	1	
34	GU19748000	Cablage	2	

Assembly	CHASSIS
Code	33.01
Description	Batterie
Revision	1

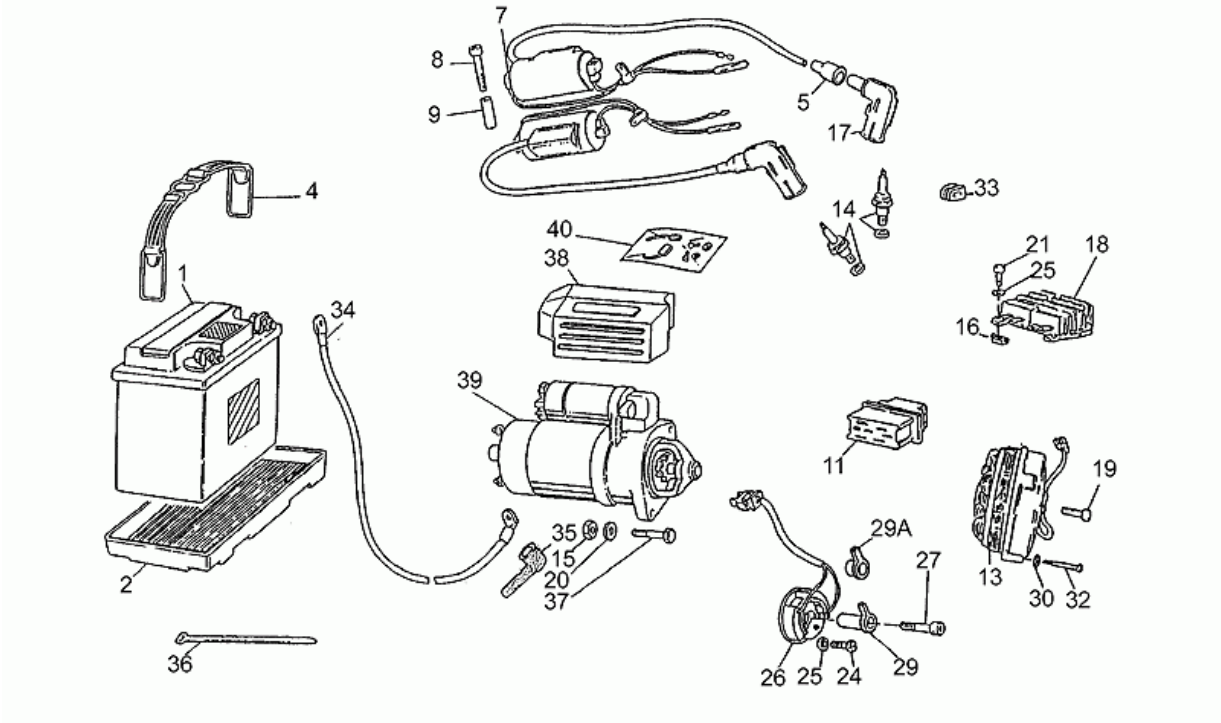

Pos.	Code	Description	Q.ty	Variants
35	GU19707100	Capuchon	2	
36	GU14609650	Collier 3,6x20,6	20	
37	GU98052435	Vis M8X35	2	
38	GU19733350	Protection	1	**Spécifications techniques:**Bosch[B]
39	GU30730711	Démarreur Valeo	1	
40	GU14730570	Kit rév. démarreur	1	**Spécifications techniques:**Bosch[B]

Assembly	CHASSIS
Code	33.02
Description	Sacs latéraux - paire
Revision	1

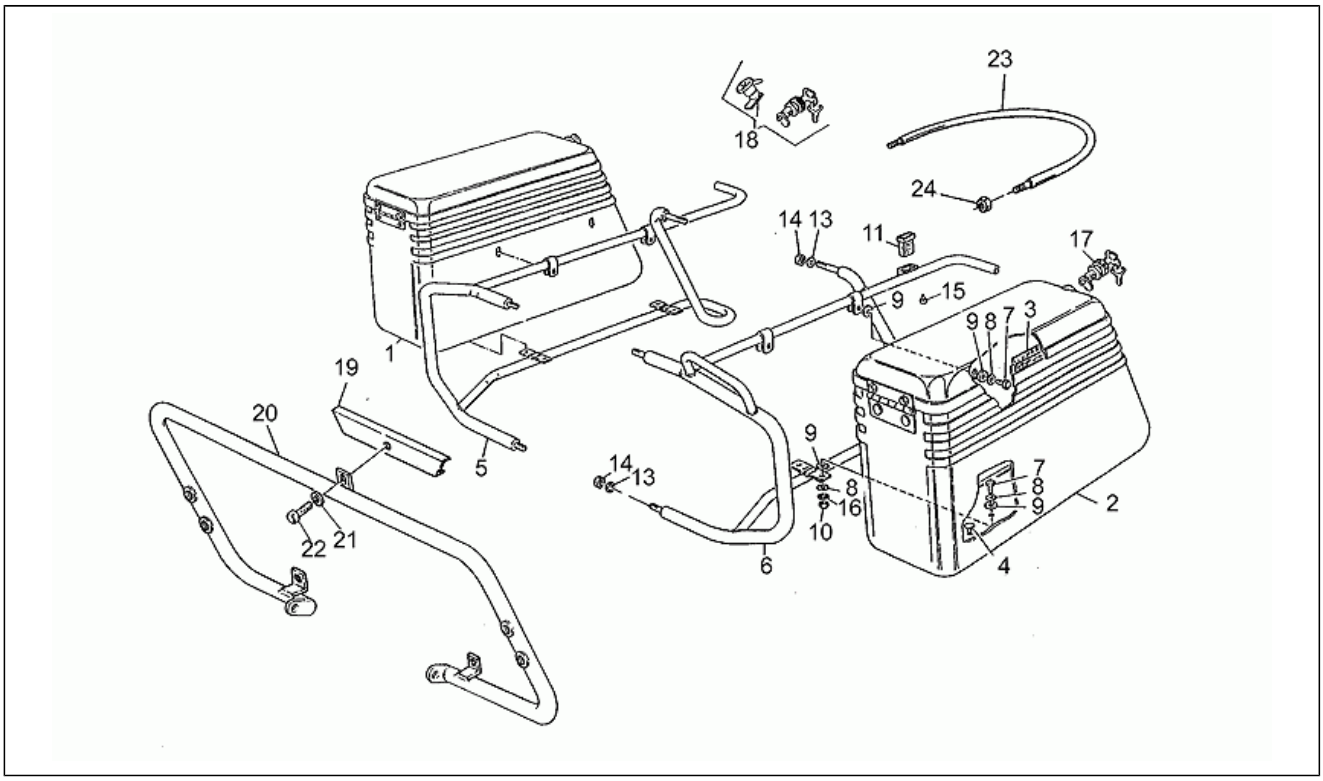

Pos.	Code	Description	Q.ty	Variants
1	GU28482580	Sacoche d. cpl.bleue C.	1	**Couleur:**Carabinieri Blue 240[b]
2	GU28485780	Sacoche g. cpl.bleue C.	1	**Couleur:**Carabinieri Blue 240[b]
3	GU28483946	Joint couvercle	2	
4	GU19705900	Tampon	8	
5	GU28485045	Support droite	1	
6	GU28486545	Support gauche	1	
7	GU98054320	Vis M6X20	12	
8	GU95100141	Rondelle 6,4x12x1,2	16	
9	GU93110060	Caoutchouc	24	
10	GU92602206	Ecrou	8	
11	GU28584845	Caoutchouc	2	
13	GU95021108	Rondelle élastique	6	
14	GU92602208	Ecrou M8X1,25	6	
15	GU93180706	Caoutchouc	1	
16	GU95021106	Rondelle évent.	8	
17	GU28489945	Serrure	2	
18	GU23736891	Kit serrure BOSCH	1	
19	GU19451515	Plaque fixation	1	
20	GU19451525	Plaque fixation	1	
21	GU95020108	Rondelle	1	
22	GU98610445	Vis	1	
23	GU28486880	Traverse raccordement sacoches	1	
24	GU92630508	Ecrou	2	

Assembly	CHASSIS
Code	33.03
Description	Carène
Revision	1

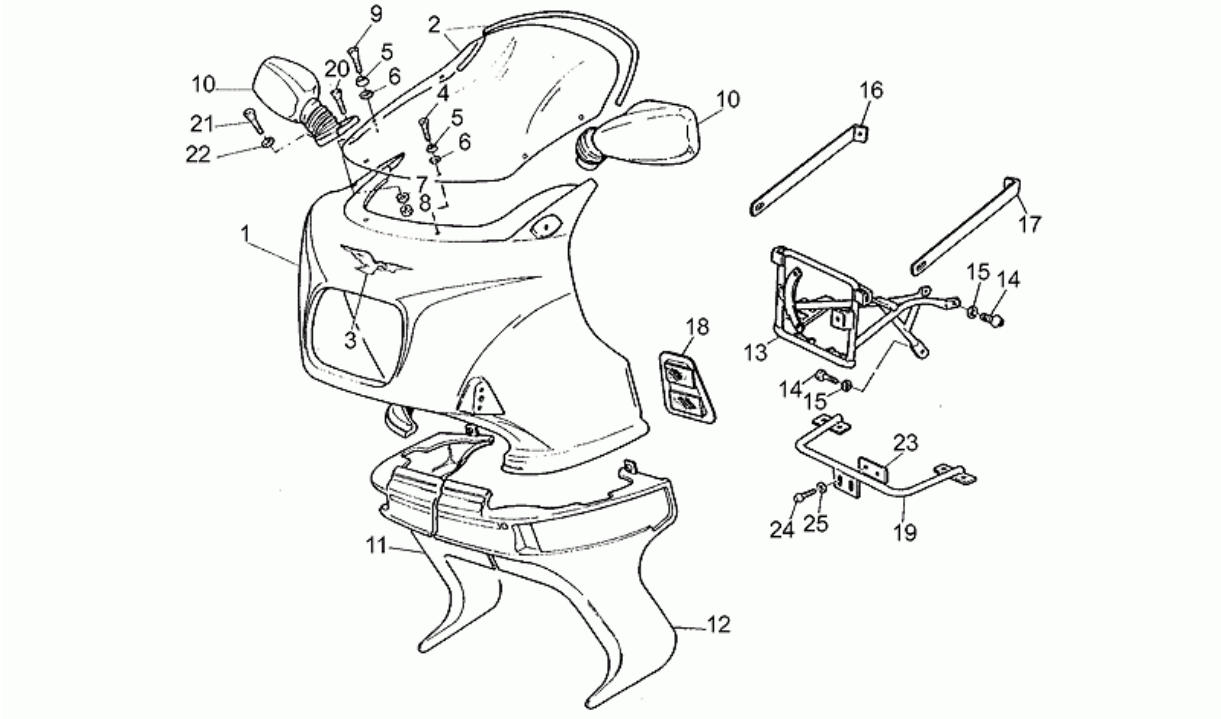

Pos.	Code	Description	Q.ty	Variants
1	GU19575415	Carène sup.	1	**Couleur:**Carabinieri Blue 240[b]
2	GU31577240	Pare-brise	1	
3	GU27917520	Décalco	1	
4	GU98250625	Vis	2	
5	GU18577850	Rondelle	6	
6	GU45212400	Joint torique	6	
7	GU95001206	Rondelle	4	
8	GU92630207	Ecrou	4	
9	GU98250630	Vis FHC M6X30	4	
10	GU28769847	Miroir rétroviseur	2	
11	GU19570315	Protection jambes D	1	**Couleur:**Carabinieri Blue 240[b]
11	GU195703151	Protection jambes D	1	**Couleur:**Brut[gr]
12	GU19570415	Protection jambes G	1	**Couleur:**Carabinieri Blue 240[b]
12	GU195704151	Protection jambes G	1	**Couleur:**Brut[gr]
13	GU31578640	Plaque support	1	
14	GU98822414	Vis	3	
15	GU95021108	Rondelle élastique	3	
16	GU31573540	Soutien d.	1	
17	GU31573640	Soutien g.	1	
18	GU19941715	Protection genoux	2	
19	GU31570840	Support carène	1	
20	GU98202516	Vis	2	
21	GU98202520	Vis	2	
22	GU95007205	Rondelle	4	
23	GU17451750	Plaquette	1	
24	GU98054420	Vis M8X20	2	
25	GU95004208	Rondelle	2	

Assembly	CHASSIS
Code	33.04
Description	Carrosserie
Revision	1

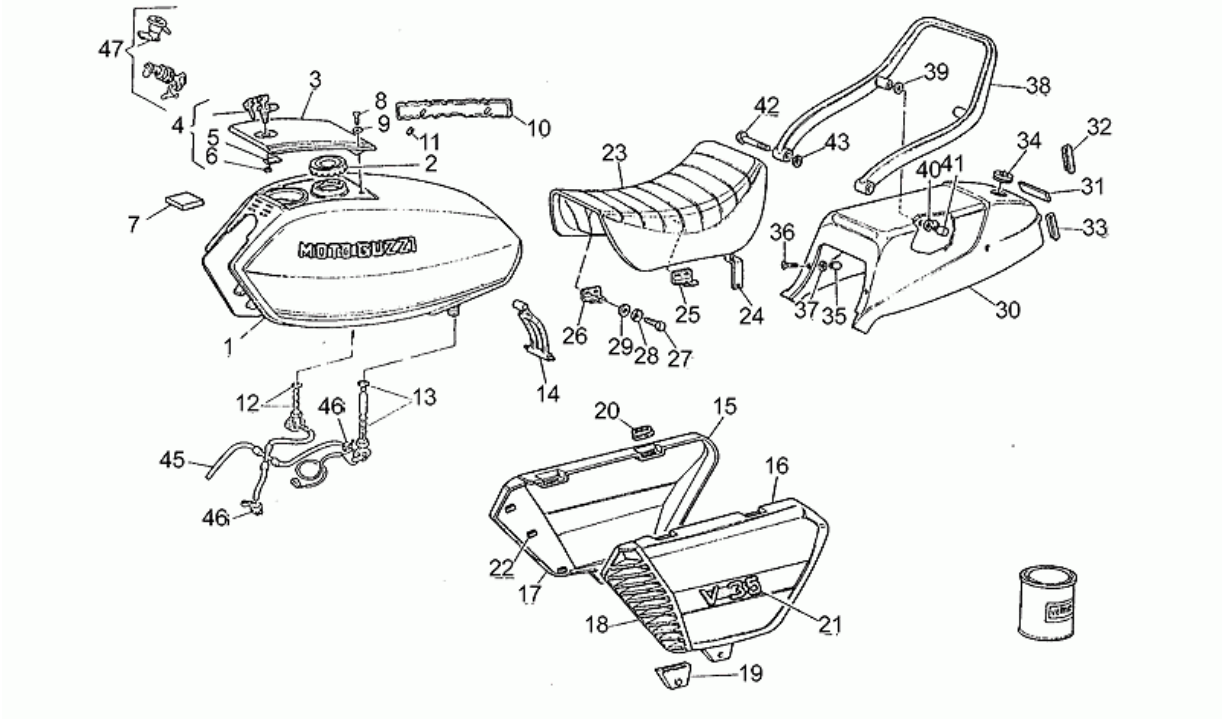

Pos.	Code	Description	Q.ty	Variants
1	GU191002051	Réservoir brut	1	**Couleur:**Brut[gr]
1	GU19100215	Réservoir essence	1	**Couleur:**Carabinieri Blue 240[b]
2	GU28103946	Bouchon réservoir	1	
3	GU141040551	Couvercle réservoir brut	1	**Couleur:**Brut[gr]
3	GU19104015	Couvercle réservoir	1	**Couleur:**Carabinieri Blue 240[b]
4	GU14736856	Serrures	1	
5	GU18105001	Languette	1	
6	GU19104950	Collier	1	
7	GU19104336	Caoutchouc	1	
8	GU98054210	Vis	2	
9	GU95129100	Rondelle élastique 5,3X10X0,5	2	
10	GU14917300	Décalco "Moto Guzzi"	2	
11	GU14105100	Agrafe	4	
12	GU23105470	Robinet ess. d.	1	
13	GU23105370	Robinet ess. g.	1	
14	GU19102750	Tirant	1	
15	GU19476215	Flanc D, bleu	1	
15	GU194762501	Panneau latéral droit brut	1	
16	GU19476315	Flanc G, bleu	1	
16	GU194763501	Panneau latéral gauche brut	1	
17	GU19478150	Grille droite	1	
18	GU19478250	Grille gauche	1	
19	GU19478550	Caoutchouc	2	
20	GU19478750	Caoutchouc	4	
21	GU19922000	Décor "V35"	2	
22	GU39922200	Plaquette	10	
23	GU23460590	Selle	1	
24	GU28460945	Languette	1	

Assembly	CHASSIS
Code	33.04
Description	Carrosserie
Revision	1

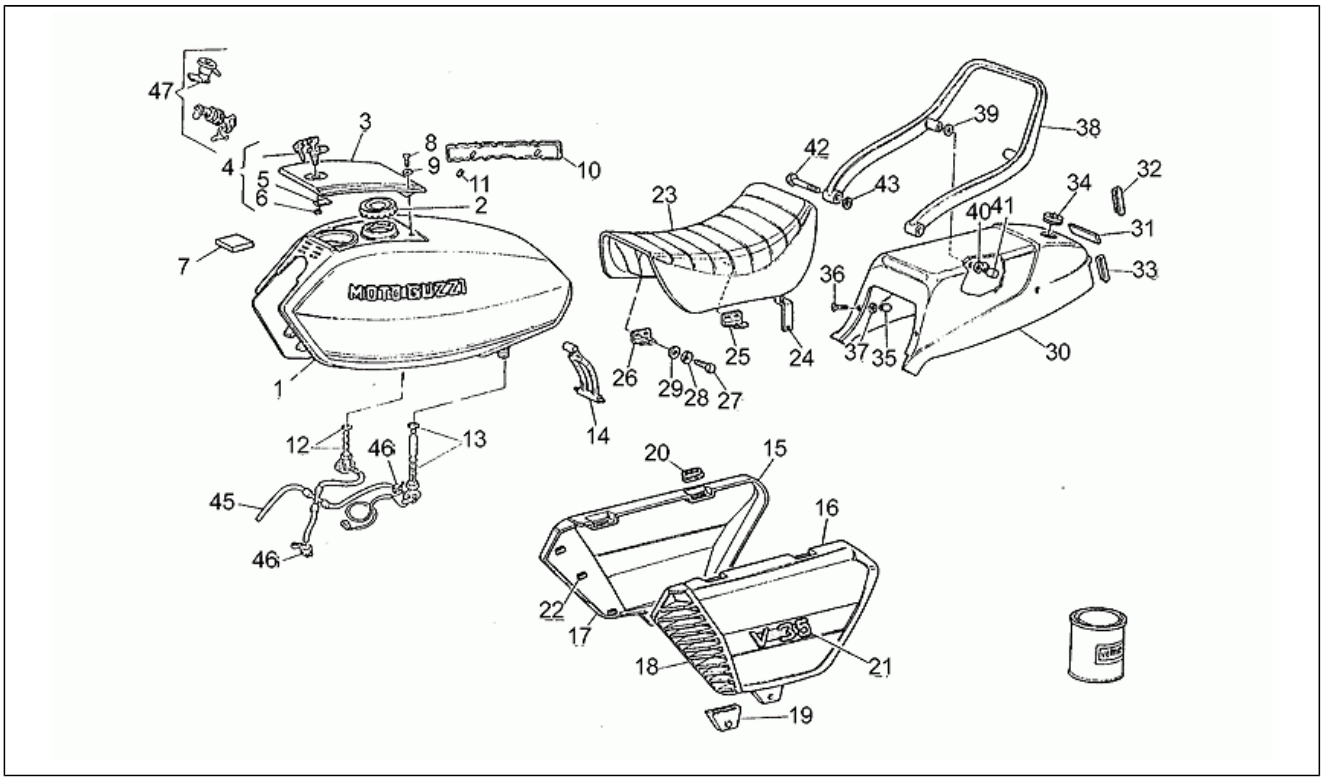

Pos.	Code	Description	Q.ty	Variants
25	GU28461345	Charnière arrière selle	1	
26	GU28461300	Charnière avant selle	1	
27	GU98054316	Vis M6X16	5	
28	GU95100139	Rondelle 6,5X17X1.5	5	
29	GU95021106	Rondelle évent.	5	
30	GU234726901	Queue brute	1	**Couleur:**Brut[gr]
30	GU28472680	Queue bleue Carabinieri	1	**Couleur:**Carabinieri Blue 240[b]
31	GU28923400	Déc."MotoGuzzi"	1	
32	GU28439845	Joint d.	1	
33	GU28439846	Joint g.	1	
34	GU28479945	Caoutchouc	1	
35	GU28472545	Tige fixation	2	
36	GU98280616	Vis	2	
37	GU95000206	Rondelle	2	
38	GU28464301	Poignée pass.	1	
39	GU28478645	Rondelle	2	
40	GU28471845	Entretoise	2	
41	GU28471945	Pivot	2	
42	GU23466890	Pivot	2	
43	GU95129180	Rondelle 10,5X18X0,8	2	
45	GU29106500	Tuyau essence	1	
46	GU28108410	Collier	4	
47	GU23736891	Kit serrure BOSCH	1	

Assembly	CHASSIS
Code	33.05
Description	Couple conique AR
Revision	1

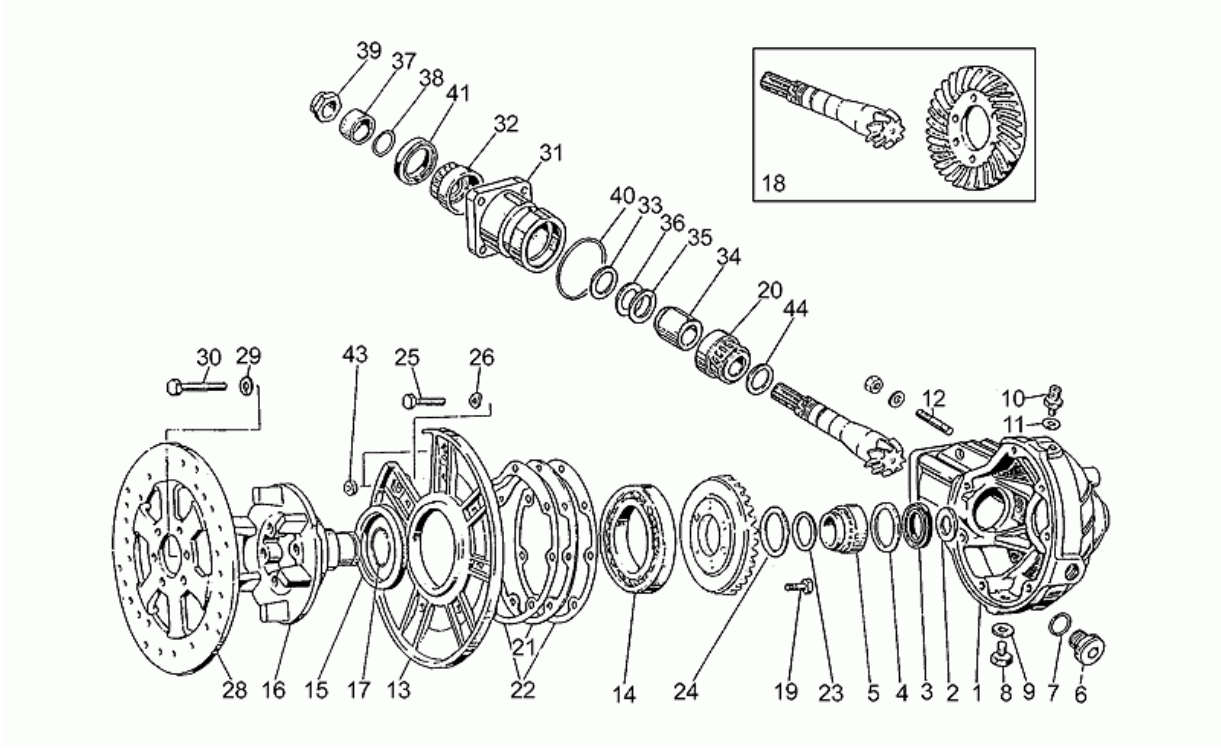

Pos.	Code	Description	Q.ty	Variants
1	GU19350322	Boîtier transm.brut	1	
2	GU19351900	Rondelle d'appui	1	
3	GU70403547	Bague d'étanchéité	11	
4	GU19351100	Rondelle d'appui	1	
5	GU92252235	Roulement à rouleaux 35x50x17	1	
6	GU12022600	Bouchon huile	1	
7	GU90706203	Joint torique 20,24X2,62	1	
8	GU95980214	Bouchon niveau huile	1	
9	GU10528900	Garniture	1	
10	GU19206501	Bouchon purge	1	
11	GU10528900	Garniture	1	
12	GU96508055	Vis sans tête	1	
13	GU19350421	Couvercle	1	
14	GU92201070	Roulement à billes 70x110x13	1	
15	GU90407590	Bague d'étanchéité 75x90x8	1	
16	GU19351402	Pivot	1	
17	GU90353030	Bague de butée	1	
18	GU19354621	Couple conique Z=8/31	1	
19	GU19356320	Vis	6	
20	GU92249223	Roulement roul.con.	1	
21	GU19355400	Cale 0,8 mm	1	
21	GU19355402	Cale 0,9 mm	1	
21	GU19355404	Cale 1 mm	1	
21	GU19355406	Cale 1,1 mm	1	
21	GU19355408	Cale 1,2 mm	1	
21	GU19355410	Cale 1,3 mm	1	
21	GU19355411	Cale 1,4 mm	1	
21	GU19355412	Cale 1,5 mm	1	

Assembly	CHASSIS
Code	33.05
Description	Couple conique AR
Revision	1

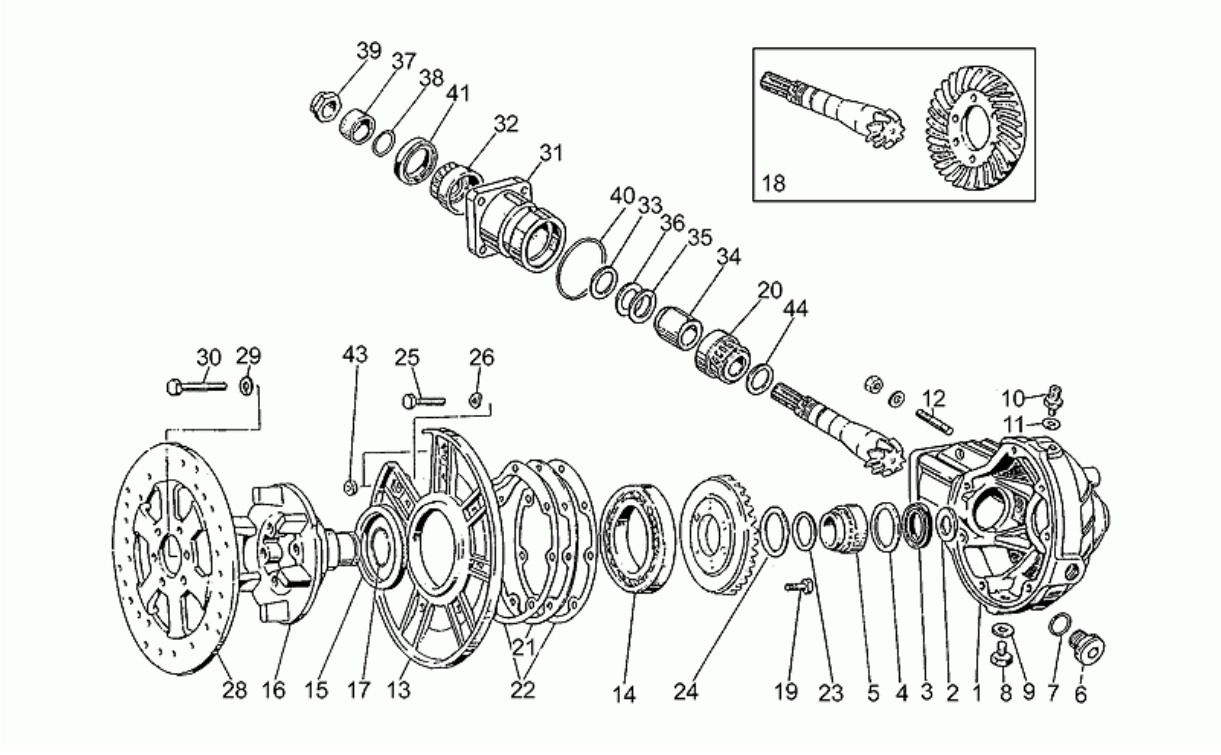

Pos.	Code	Description	Q.ty	Variants
21	GU19355413	Cale 1,6 mm	1	
22	GU19350700	Joint	2	
23	GU19352300	Rondelle éventail	1	
24	GU19353500	Rondelle éventail	1	
25	GU19357660	Vis M8X25	7	
26	GU61270300	Rondelle élastique 8x15x0,3	7	
28	GU19635736	Disque frein arrière	1	
29	GU14615901	Rondelle 8,4X13X0,8	6	
30	GU98054418	Vis	6	
31	GU19352401	Habillage roulement	1	
32	GU92249220	Roulement à rouleaux 20x47x14	1	
33	GU19355300	Cale 1 mm	2	
33	GU19355301	Cale 1,1 mm	2	
33	GU19355302	Cale 1,2 mm	2	
33	GU19355303	Cale 1,3 mm	2	
33	GU19355304	Cale 1,4 mm	2	
33	GU19355305	Cale 1,5 mm	2	
33	GU19355306	Cale 1,6 mm	2	
33	GU19355307	Cale 1,7 mm	2	
33	GU19355308	Cale 1,8 mm	2	
33	GU19355309	Cale 1,9 mm	2	
34	GU19355121	Entretoise	1	
35	GU19355200	Rondelle ajustem. 0,1 mm	1	
36	GU19355202	Rondelle ajustem. 0,15 mm	1	
37	GU19356801	Entretoise	1	
38	GU90706188	Bague d'étanchéité 18,77X1,78	1	
39	GU19356700	Ecrou	1	
40	GU90706552	Bague d'étanchéité	1	

Assembly	CHASSIS
Code	33.05
Description	Couple conique AR
Revision	1

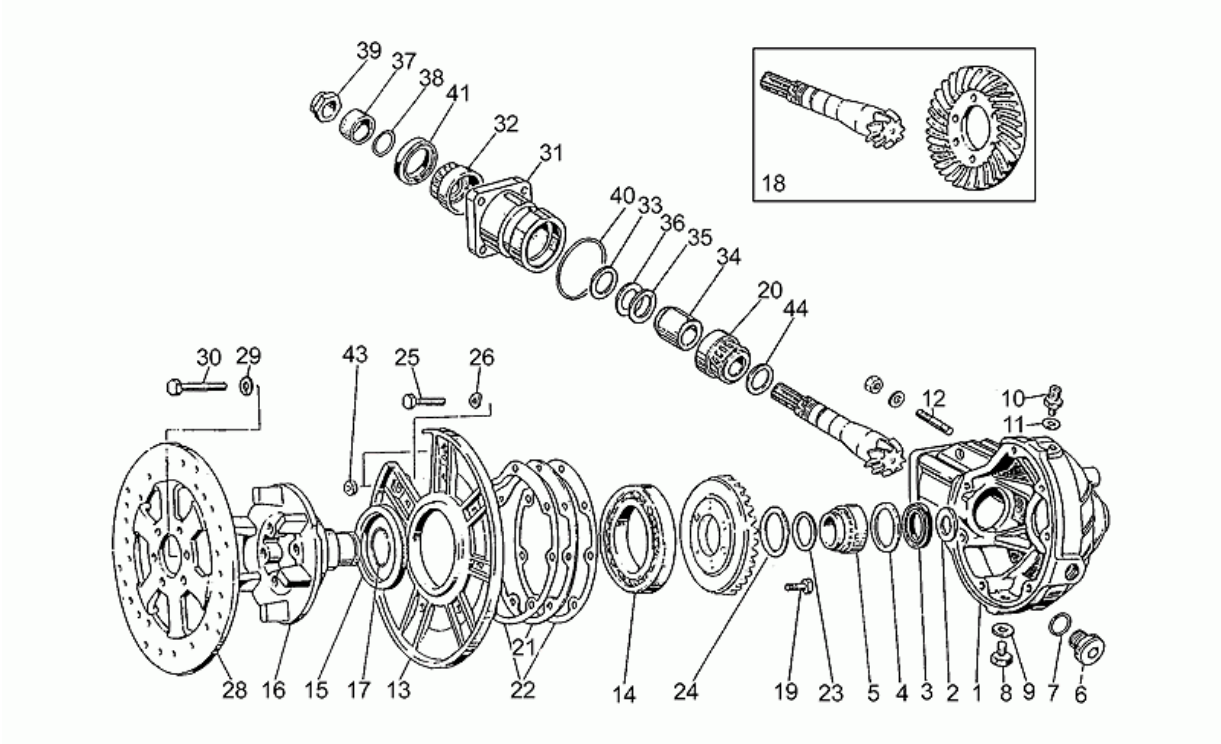

Pos.	Code	Description	Q.ty	Variants
41	GU90403247	Bague d'étanchéité	1	
43	GU92602208	Ecrou M8X1,25	2	
44	GU19355320	Cale 1 mm	1	
44	GU19355321	Cale 1,1 mm	1	
44	GU19355322	Cale 1,2 mm	1	
44	GU19355323	Cale 1,3 mm	1	
44	GU19355324	Cale 1,4 mm	1	
44	GU19355325	Cale 1,5 mm	1	
44	GU19355326	Cale 1,6 mm	1	
44	GU19355327	Cale 1,7 mm	1	
44	GU19355328	Cale 1,8 mm	1	
44	GU19355329	Cale 1,9 mm	1	

PIAGGIO&C.s.p.a.

Assembly	CHASSIS
Code	33.06
Description	Tableau de bord
Revision	1

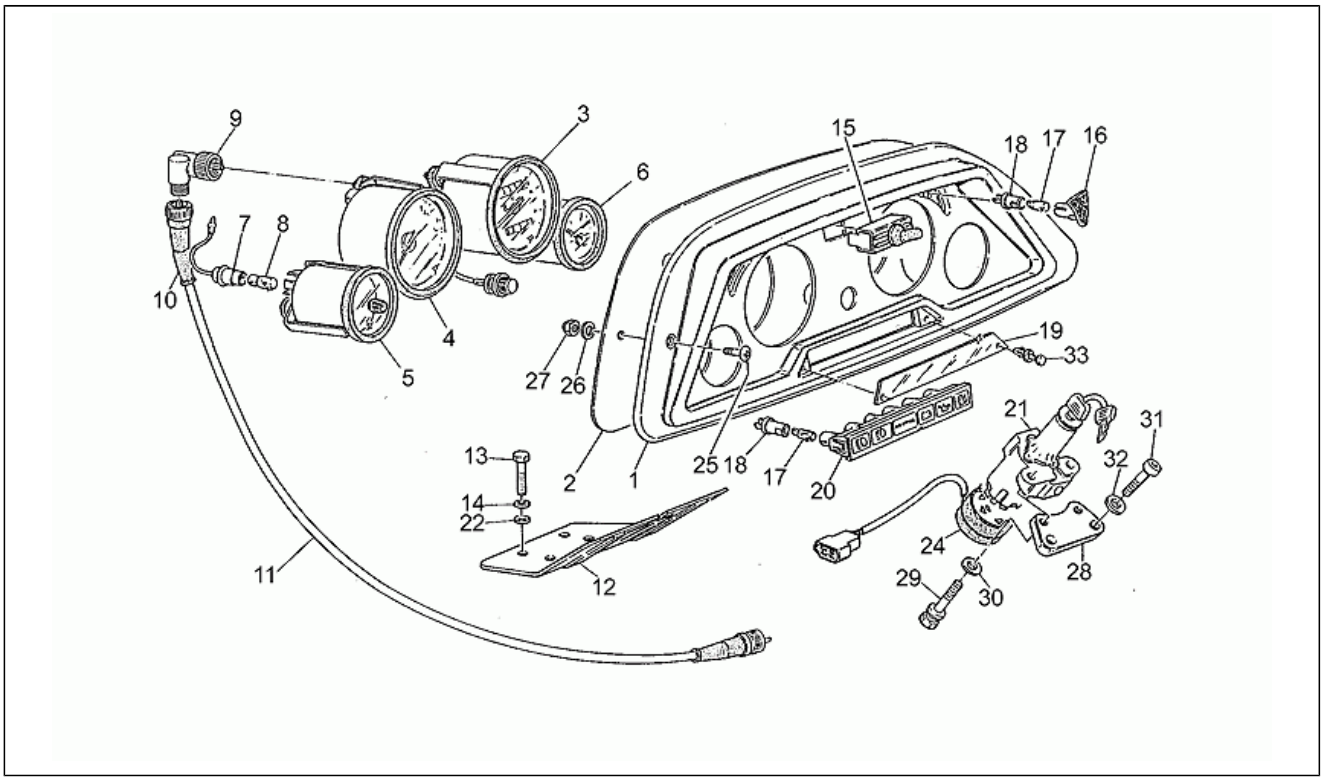

Pos.	Code	Description	Q.ty	Variants
1	GU29766260	Tableau de bord	1	
2	GU31764140	Support instruments	1	
3	GU27761535	Compteur kilométrique	1	
4	GU29767260	Compte-tours MOTOPLAT	1	
5	GU29783061001	Horloge cpl.	1	**Spécifications techniques:**See spare parts comm.n.006 of 1997[00697N]
6	GU29784960	Voltmètre	1	
7	GU14768650	Porte-ampoule	2	
8	GU93450120	Lampe (ou Ampoule) 12v-3w	3	
9	GU17768360	Renvoi 90°	1	
10	GU17762200	Gaine	1	
11	GU27760410	Transmission tachymètre	1	
12	GU19502315	Support émetteur	1	
13	GU98074418	Vis	2	
14	GU95007208	Rondelle	2	
15	GU18745701	Interrupteur	1	
16	GU65758970	Porte-témoins clignotants	2	
17	GU93450140	Lampe (ou Ampoule) 12V-1,2W	8	
18	GU19768680	Porte-ampoule	8	
19	GU29781160	Cache vitré témoins	1	
20	GU27766985	Boîtier témoins	1	
21	GU30782511	Bloc démarreur-bloc	1	
22	GU95000208	Rondelle	4	
24	GU29731460	Câblage commutateur	1	
25	GU98326021	Vis	2	
26	GU95000206	Rondelle	2	
27	GU92630106	Ecrou M6x1	2	
28	GU19782315	Support commutateur	1	

Assembly	CHASSIS
Code	33.06
Description	Tableau de bord
Revision	1

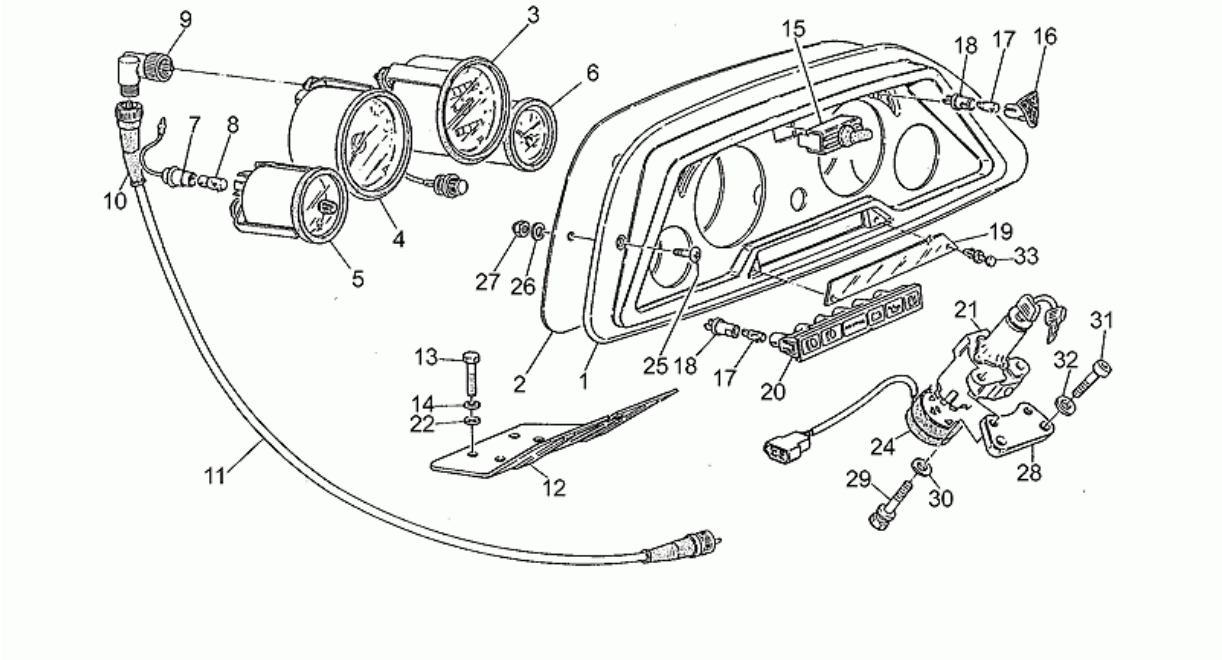

Pos.	Code	Description	Q.ty	Variants
29	GU97260425	Vis à arrachement	2	
30	GU95000208	Rondelle	2	
31	GU98620435	Vis M8X35	2	
32	GU95004208	Rondelle	2	
33	GU30753310	Tige fixation	2	

Assembly	CHASSIS
Code	33.07
Description	Feu avant
Revision	1

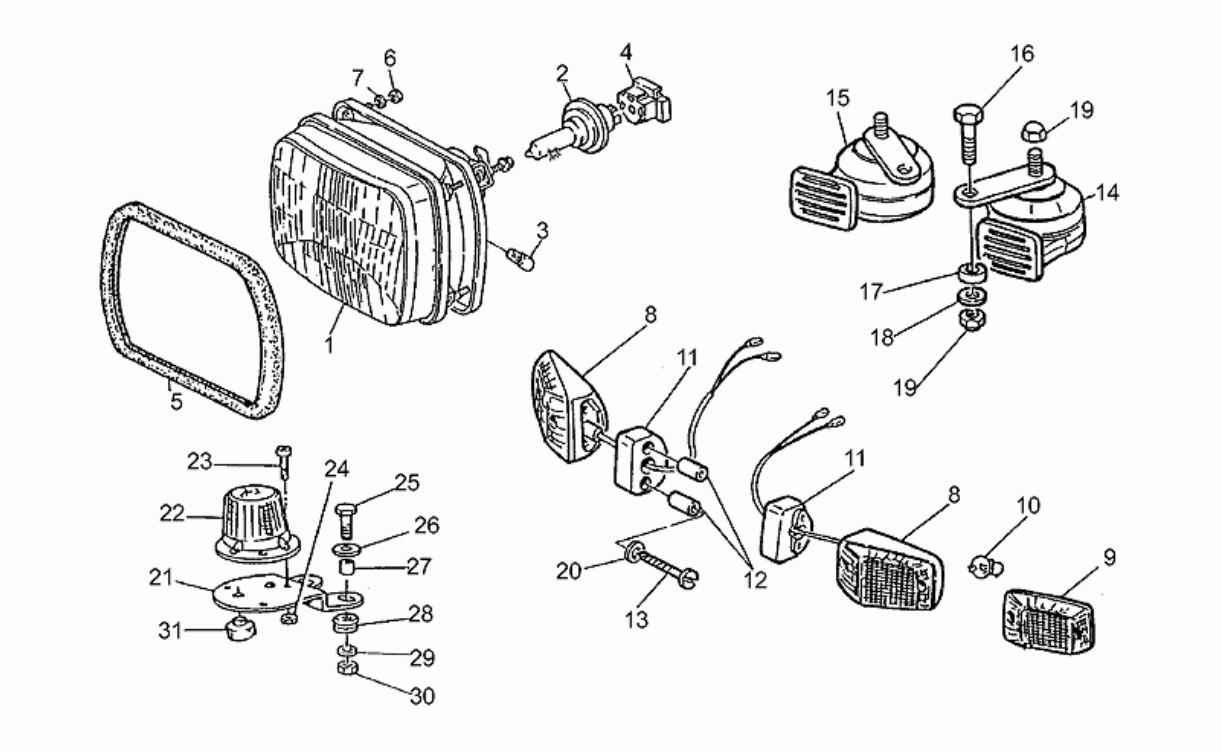

Pos.	Code	Description	Q.ty	Variants
1	GU28740560	Feu avant	1	
2	GU93450232	Lampe (ou Ampoule) 12V-55/60W	1	
3	GU93450119	Lampe (ou Ampoule) 12V-4W	1	
4	GU14756255	Porte-ampoule	1	
5	GU00823933090	Joint	1	
6	GU92602205	Ecrou	4	
7	GU95021105	Rondelle évent.	3	
8	GU30750610	Clignotant AV	2	
9	GU23753710	Vitre clignotant	2	
10	GU93450127	Lampe (ou Ampoule) 12V-10W	2	
11	GU30751410	Support clignotant	2	
12	GU91180626	Entretoise	4	
13	GU99210445	Vis	4	
14	GU28743760	Avertisseur ton aigu	1	
15	GU28743761	Avertisseur ton grave	1	
16	GU98054316	Vis M6X16	2	
17	GU91180605	Entretoise	2	
18	GU95000206	Rondelle	2	
19	GU92630206	Ecrou M6x1	4	
20	GU95100059	Rondelle 5,25x14x1,5	4	
21	GU28726581	Support clignotant	1	
22	GU17726680	Clignotant	1	
23	GU98202420	Vis	3	
24	GU92630104	Ecrou M4x0,7	3	
25	GU98054318	Vis	2	
26	GU95100141	Rondelle 6,4x12x1,2	2	
27	GU91180607	Entretoise	2	
28	GU91551085	Caoutchouc	2	

Assembly	CHASSIS
Code	33.07
Description	Feu avant
Revision	1

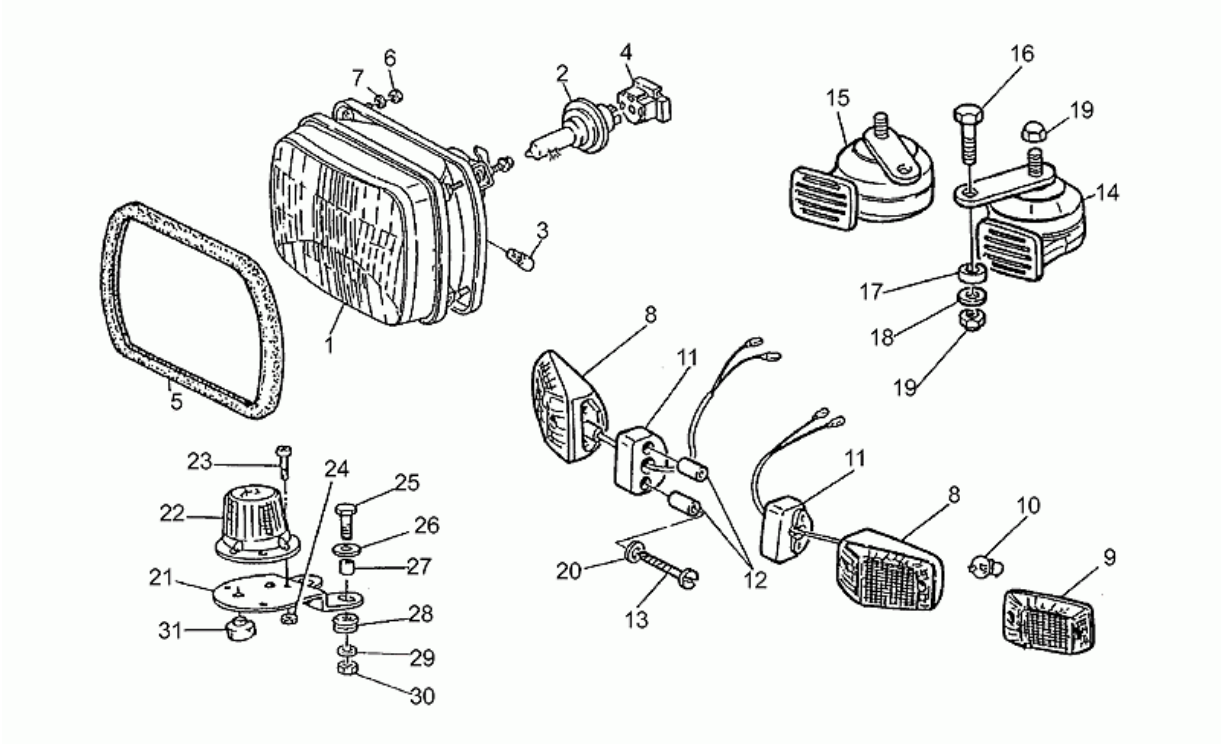

Pos.	Code	Description	Q.ty	Variants
29	GU95000206	Rondelle	2	
30	GU92781062	Ecrou	2	
31	GU28726981	Caoutchouc	1	

Assembly	CHASSIS
Code	33.08
Description	Feu arrière
Revision	1

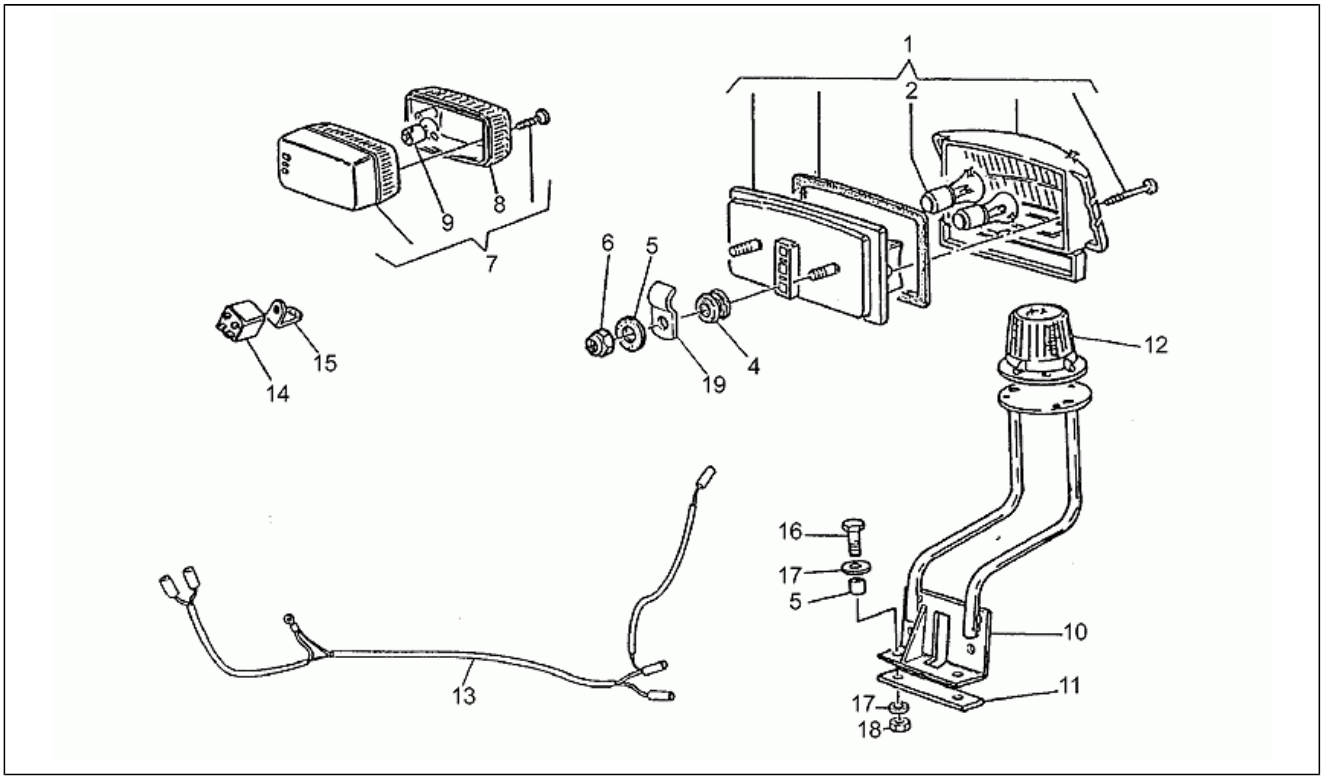

Pos.	Code	Description	Q.ty	Variants
1	GU27740985	Feu arrière	1	
2	GU93450224	Lampe (ou Ampoule) 12V/5-21W	2	
4	GU93110060	Caoutchouc	2	
5	GU90716067	Cale	4	
6	GU92630206	Ecrou M6x1	3	
7	GU28751647	Clignotant arrière	2	
8	GU28753747	Vitre clignotant	2	
9	GU93450127	Lampe (ou Ampoule) 12V-10W	2	
10	GU28726881	Support clignotant	1	
11	GU28726780	Plaque	1	
12	GU17726680	Clignotant	1	
13	GU28750981	Câblage lumières bleues	1	
14	GU28732545	Relais sirènes SWF	1	
15	GU28732946	Support relais	1	
16	GU98074320	Vis	2	
17	GU95000206	Rondelle	4	
18	GU92630106	Ecrou M6x1	2	
19	GU93301175	Cavalier	1	

Assembly	CHASSIS
Code	33.09
Description	Filtre air
Revision	1

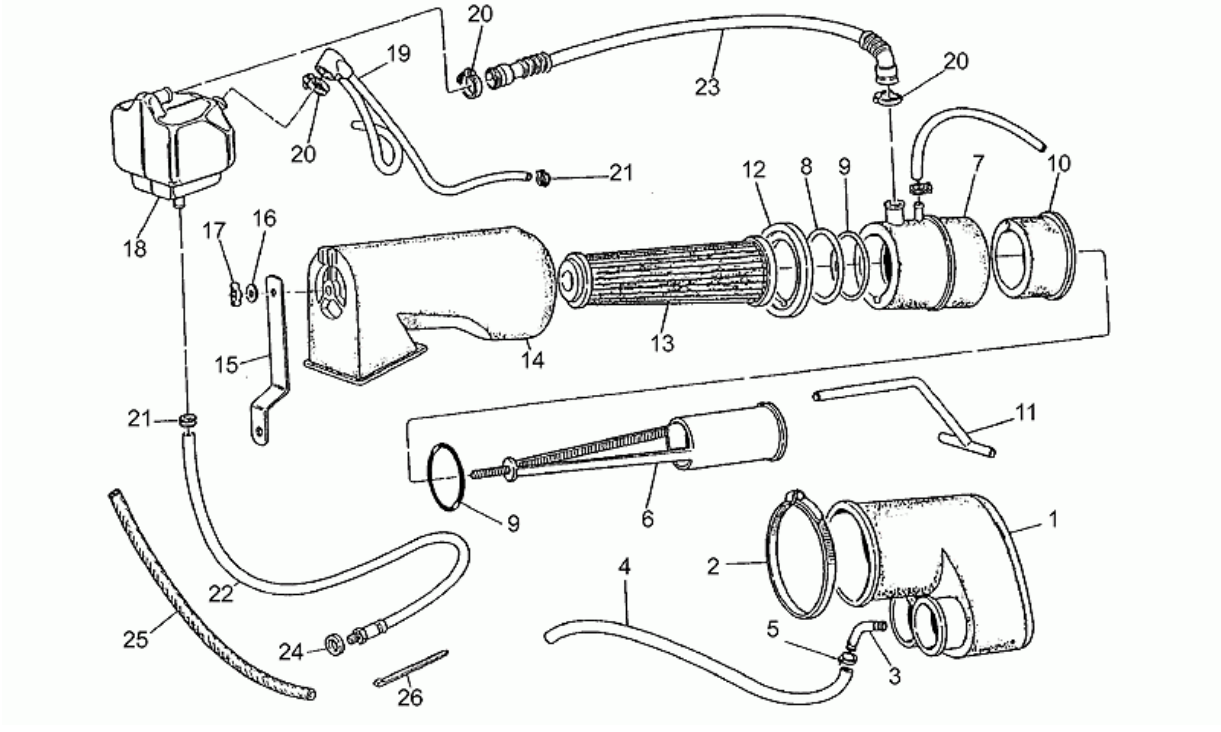

Pos.	Code	Description	Q.ty	Variants
1	GU19114300	Collecteur aspiration	1	
2	GU93305092	Collier	1	
3	GU17114650	Tuyau	1	
4	GU00823944050	Tuyau 5X9	1	
5	GU14609650	Collier 3,6x20,6	1	
6	GU19155775	Support filtre	1	
7	GU19156701	Manchon AV	1	
8	GU19113900	Joint	1	
9	GU90706552	Bague d'étanchéité	2	
10	GU19156900	Manchon AR	1	
11	GU19156001	Tuyau reniflard radiateur	1	
12	GU17113450	Bague	1	
13	GU17113651	Filtre air	1	
14	GU17114050	Couvercle filtre	1	
15	GU27114120	Plaque support	1	
16	GU95100059	Rondelle 5,25x14x1,5	1	
17	GU92670305	Ecrou	1	
18	GU27153460	Corp	1	
19	GU23159670	Reniflard	1	
20	GU93305018	Collier	3	
21	GU61108400	Collier	3	
22	GU27159360	Reniflard	1	
23	GU28157450	Tuyau	1	
24	GU12154200	Joint 8,25x15x1	1	
25	GU00823923140	Gaine thermique	1	
26	GU61609630	Collier	1	

Assembly	CHASSIS
Code	33.10
Description	Fourche Av.
Revision	1

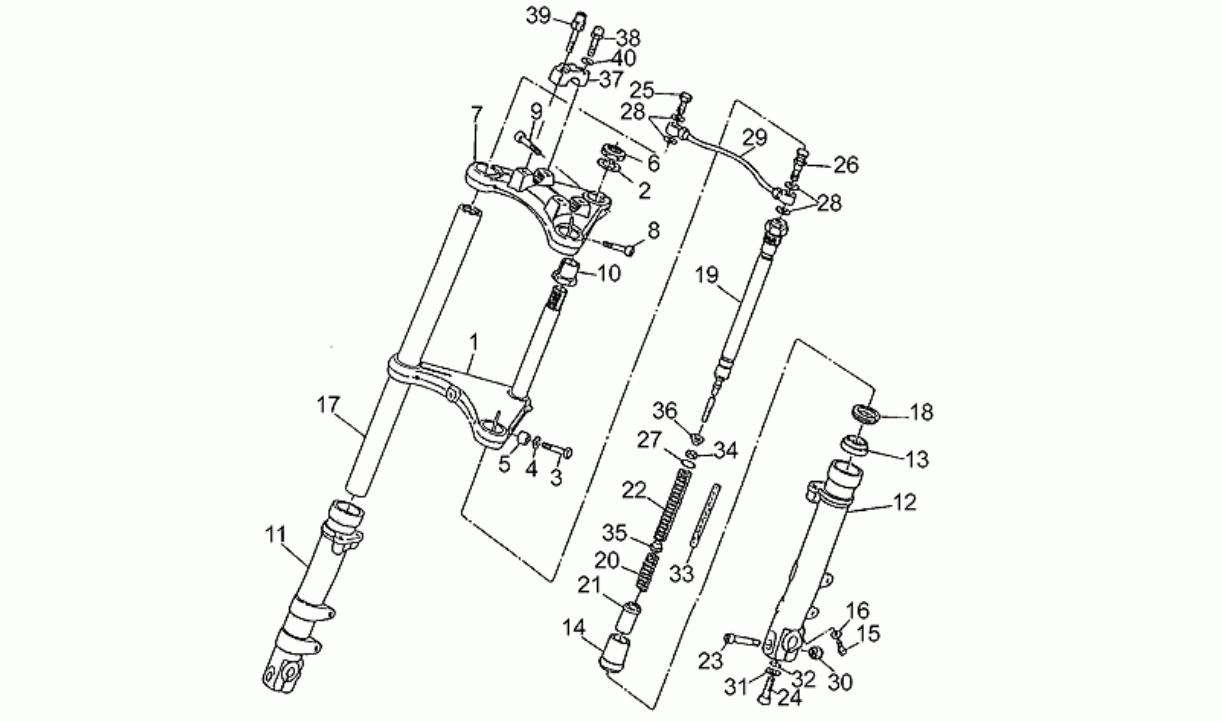

Pos.	Code	Description	Q.ty	Variants
1	GU19494015	Plaque inf. fourche	1	
2	GU18513560	Rondelle bouchon fourreau	1	
3	GU98072555	Vis M10X55	2	
4	GU95007210	Rondelle	2	
5	GU91181016	Entretoise	2	
6	GU18513460	Bouchon tube	1	
7	GU23493140	Plaque sup. fourche	1	
8	GU98610540	Vis	2	
9	GU98612535	Vis	1	
10	GU18516660	Douille bloc. direction	1	
11	GU19522515	Fourreau D	1	**Couleur:**Carabinieri Blue 240[b]
12	GU19522615	Fourreau G	1	**Couleur:**Carabinieri Blue 240[b]
13	GU90403857	Joint spi	2	
14	GU20527620	Douille	2	
15	GU98622320	Vis	2	
16	GU95100116	Rondelle 6,25x10x1,5	4	
17	GU23525470	Tige	2	
18	GU31524550	Pare-poussière	2	
19	GU23526470	Amortisseur	2	
20	GU23526610	Contre-ressort	2	
21	GU28527540	Tampon fin course	2	
22	GU23526910	Ressort	2	
23	GU98622545	Vis	2	
24	GU98622530	Vis	2	
25	GU28556450	Vis percée	1	
26	GU28556250	Soupape air	1	
27	GU90706282	Bague d'étanchéité	2	
28	GU28556350	Rondelle en cuivre	4	

Assembly	CHASSIS
Code	33.10
Description	Fourche Av.
Revision	1

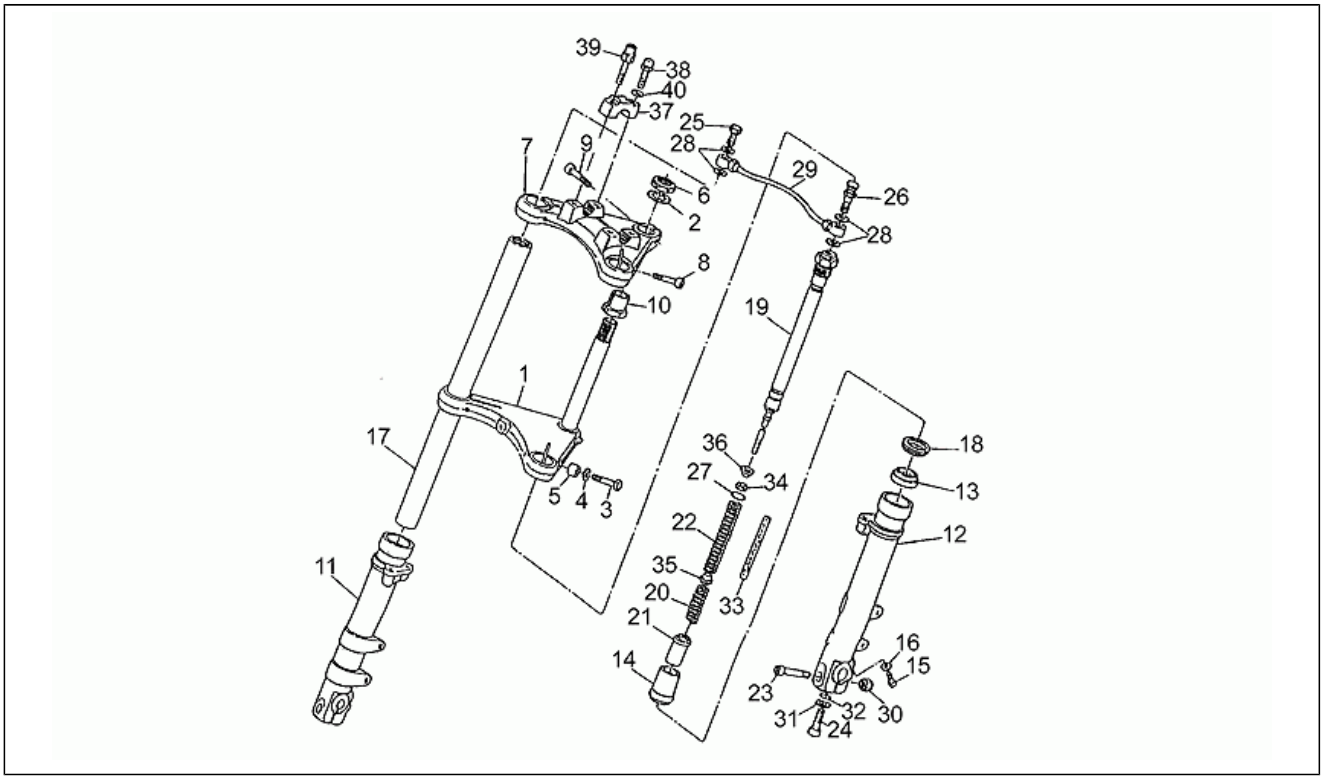

Pos.	Code	Description	Q.ty	Variants
29	GU19529660	Tuyau amortisseur AV	1	
30	GU92781100	Ecrou	2	
31	GU27499120	Rondelle plate	2	
32	GU90706094	Joint torique 9x2	2	
33	GU23526370	Tube anti-frottement	2	
34	GU92602308	Ecrou	2	
35	GU23527910	Entretoise	2	
36	GU28526540	Rondelle	2	
37	GU17500200	Collier	2	
38	GU28500745	Goujon	2	
39	GU19500715	Goujon	2	
40	GU95000208	Rondelle	4	

Assembly	CHASSIS
Code	33.11
Description	Fourche arriere
Revision	1

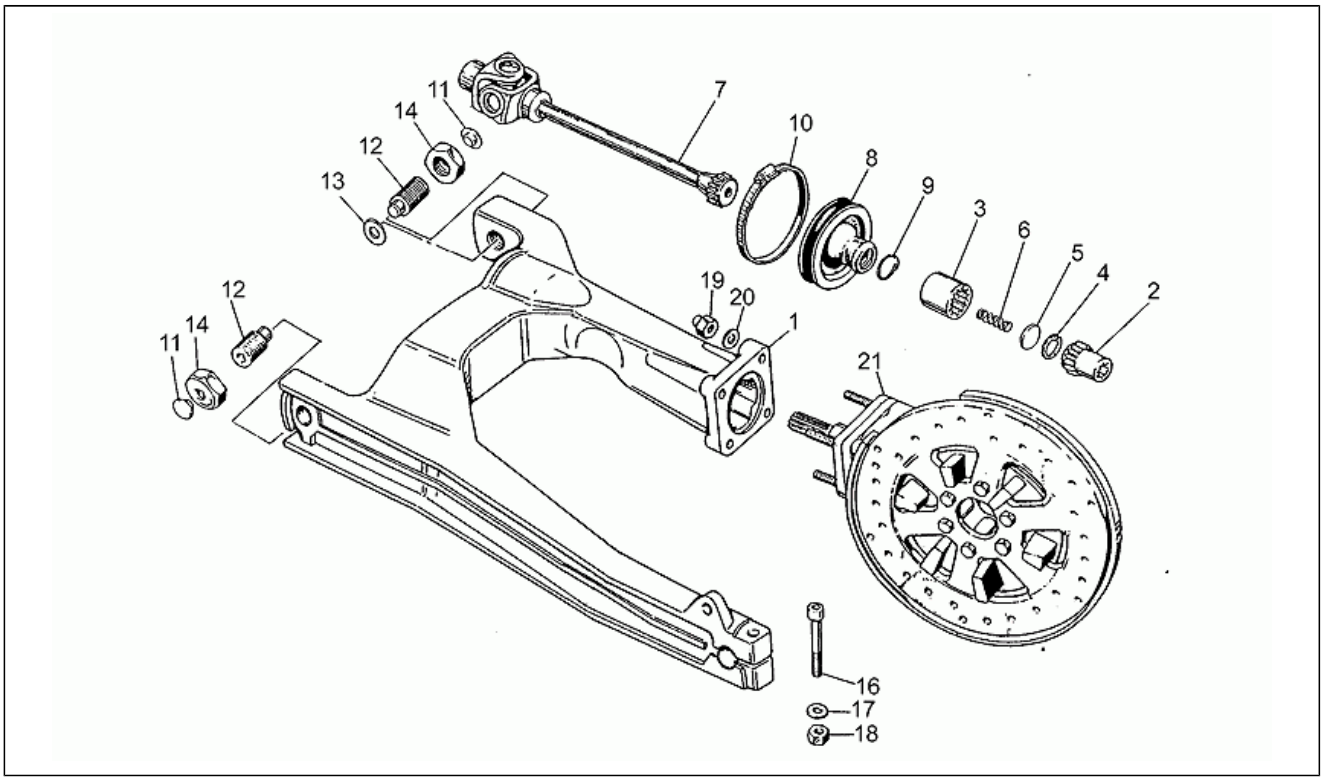

Pos.	Code	Description	Q.ty	Variants
1	GU31540280	Fourche ar.gris	1	
2	GU19327701	Manchon	1	
3	GU19328801	Manchon	1	
4	GU90272023	Bague seeger	1	
5	GU19327601	Disque	1	
6	GU94321099	Ressort	1	
7	GU23328081	Joint	1	
8	GU23548080	Collier de protection	1	
9	GU23548180	Ressort	1	
10	GU93305074	Collier	1	
11	GU93180105	Bouchon	2	
12	GU19547000	Pivot	2	
13	GU35214300	Cale	2	
14	GU14547800	Ecrou	1	
16	GU98620545	Vis	1	
17	GU95004210	Rondelle 10,2x18x2	1	
18	GU92602210	Ecrou	1	
19	GU92781081	Ecrou	4	
20	GU14615901	Rondelle 8,4X13X0,8	4	
21	GU19350220	Boîte transm.cpl.brute	1	

Assembly	CHASSIS
Code	33.12
Description	Circuit electrique
Revision	1

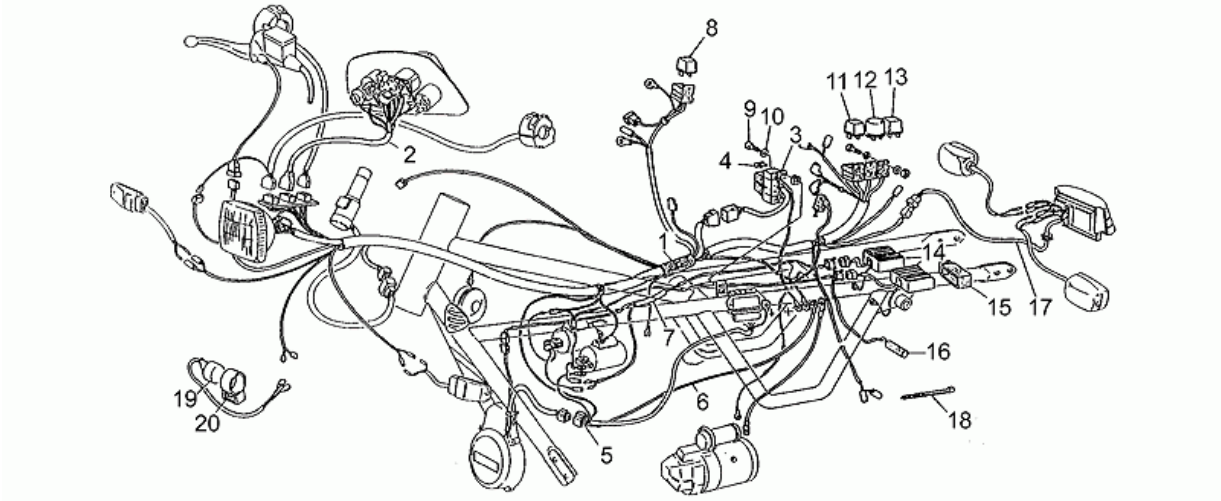

Pos.	Code	Description	Q.ty	Variants
1	GU19747115	Circuit electrique	1	
2	GU29747260	Câblage tableau de bord	1	
3	GU30743000	Boîte à fusibles	1	
4	GU28742560	Fusible 15A	6	
5	GU28726301	Câblage alternat.-régulateur	1	
6	GU29726450	Câble alternateur-batt.	1	
7	GU31722140	Câblage HT	1	
8	GU29732550	Relais 5 pin	1	
9	GU98054216	Vis	2	
10	GU95100059	Rondelle 5,25x14x1,5	2	
11	GU19732500	Relais démarrage	1	
12	GU17750520	Clignotement	1	
13	GU30732510	Relais démarrage	1	
14	GU23721493	Centrale elettronica	2	
15	GU27723835	Support élastique	2	
16	GU27710435	Condensateur	1	
17	GU19747335	Câblage feu AR	1	
18	GU14609650	Collier 3,6x20,6	1	
19	GU28787247	Klaxon	1	
20	GU30787310	Bloc	1	

Assembly	CHASSIS
Code	33.13
Description	Guidon
Revision	1

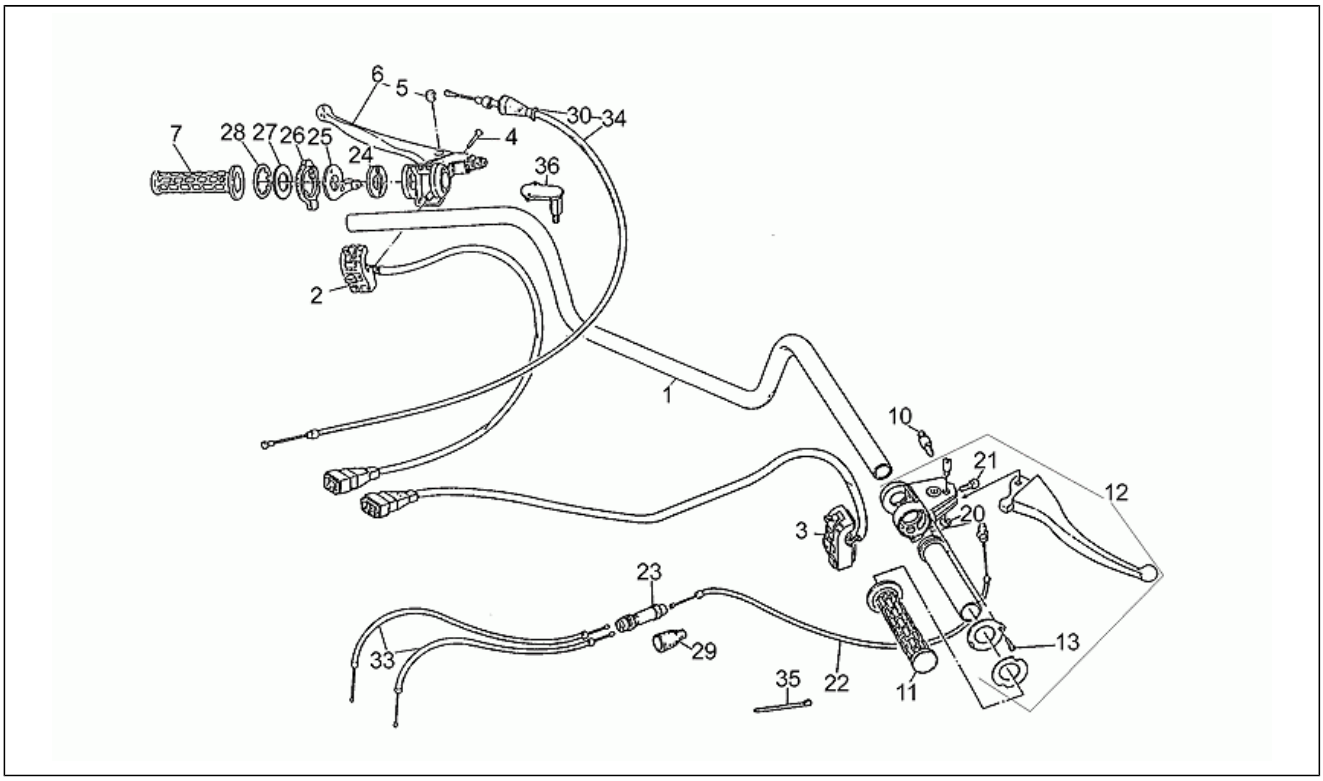

Pos.	Code	Description	Q.ty	Variants
1	GU30600310	Guidon	1	
2	GU19738015	Déviateur feux gche	1	
3	GU19750315	Déviateur feux dte	1	
4	GU98260425	Vis	2	
5	GU29608750	Douille	1	
6	GU29605550	Levier embrayage	1	
7	GU29603050	Poignée gc.	1	
10	GU39741101	Interrupteur stop	1	
11	GU29603550	Poignée dr.	1	
12	GU29999250	Câble gaz cpl.	1	
13	GU98280410	Vis	1	
20	GU92601206	Ecrou	1	
21	GU98612316	Vis M6x16	1	
22	GU28117533	Câble gaz	1	
23	GU30607910	Dedoublereur	1	
24	GU29132050	Bague	1	
25	GU29133250	Commande starter	1	
26	GU29132350	Levier	1	
27	GU29132650	Rondelle	1	
28	GU17751100	Bague	1	
29	GU12717600	Capuchon	1	
30	GU23093870	Soufflet	1	
33	GU23117730	Câble gaz	2	
34	GU23093070	Câble embrayage	1	
35	GU14609650	Collier 3,6x20,6	1	
35	GU61609630	Collier	1	
36	GU28504047	Support bouton radio	1	

Assembly	CHASSIS
Code	33.14
Description	Garde-boue Av.
Revision	1

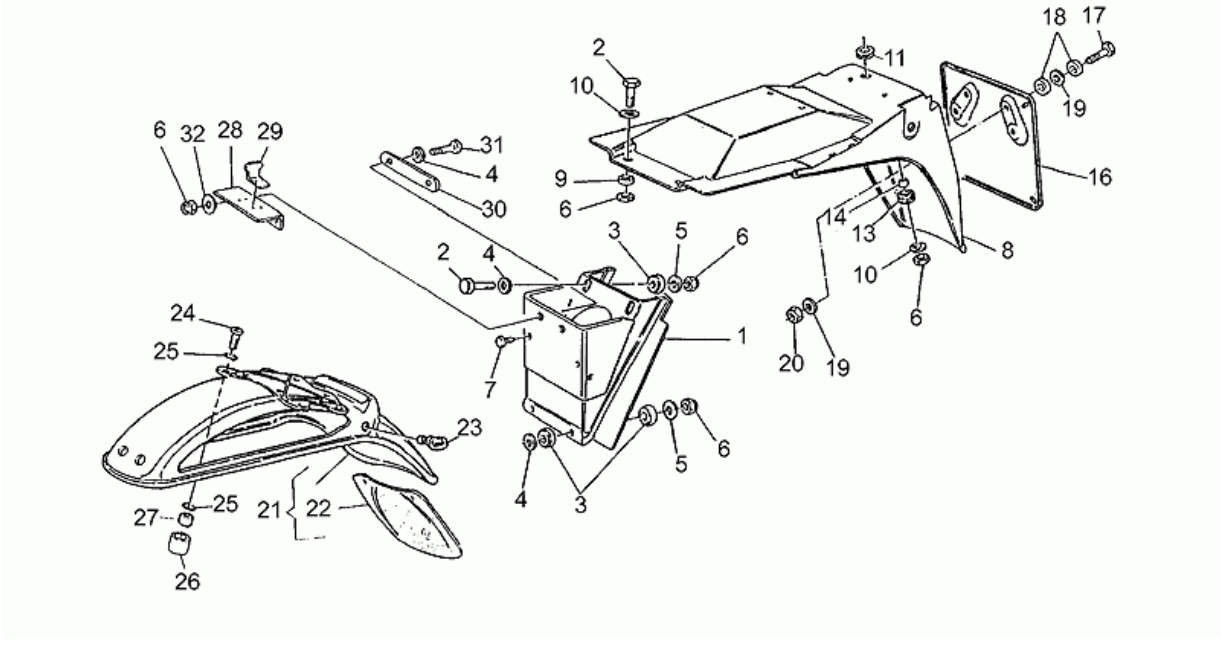

Pos.	Code	Description	Q.ty	Variants
1	GU23438690	Bavette anti-éclaboussures	1	
2	GU98054320	Vis M6X20	6	
3	GU93110060	Caoutchouc	8	
4	GU95000206	Rondelle	6	
5	GU95100141	Rondelle 6,4x12x1,2	4	
6	GU92630106	Ecrou M6x1	10	
7	GU19705900	Tampon	2	
8	GU19437015	Garde-boue Ar.	1	
9	GU93110082	Caoutchouc	2	
10	GU95004206	Rondelle 6,15x11x0,8	8	
11	GU91551092	Caoutchouc pass.câble	1	
13	GU91551085	Caoutchouc	2	
14	GU91180607	Entretoise	2	
16	GU14474650	Porte-plaque	1	
17	GU98052220	Vis	4	
18	GU90716057	Cale	8	
19	GU95100059	Rondelle 5,25x14x1,5	8	
20	GU92630105	Ecrou	4	
21	GU19434315	Garde-boue AV cpl.	1	**Couleur:**Carabinieri Blue 240[b]
21	GU194344151	Garde-boue Av.	1	**Couleur:**Brut[gr]
22	GU27436920	Bavette anti-éclaboussures	1	
23	GU28659740	Oeillet	1	
24	GU98230845	Vis	4	
25	GU90706092	Joint torique	8	
26	GU31436415	Entretoise	4	
27	GU28436460	Douille	4	
28	GU23439010	Plaque fix. Centrale	1	
29	GU23438510	Support	2	

Assembly	CHASSIS
Code	33.14
Description	Garde-boue Av.
Revision	1

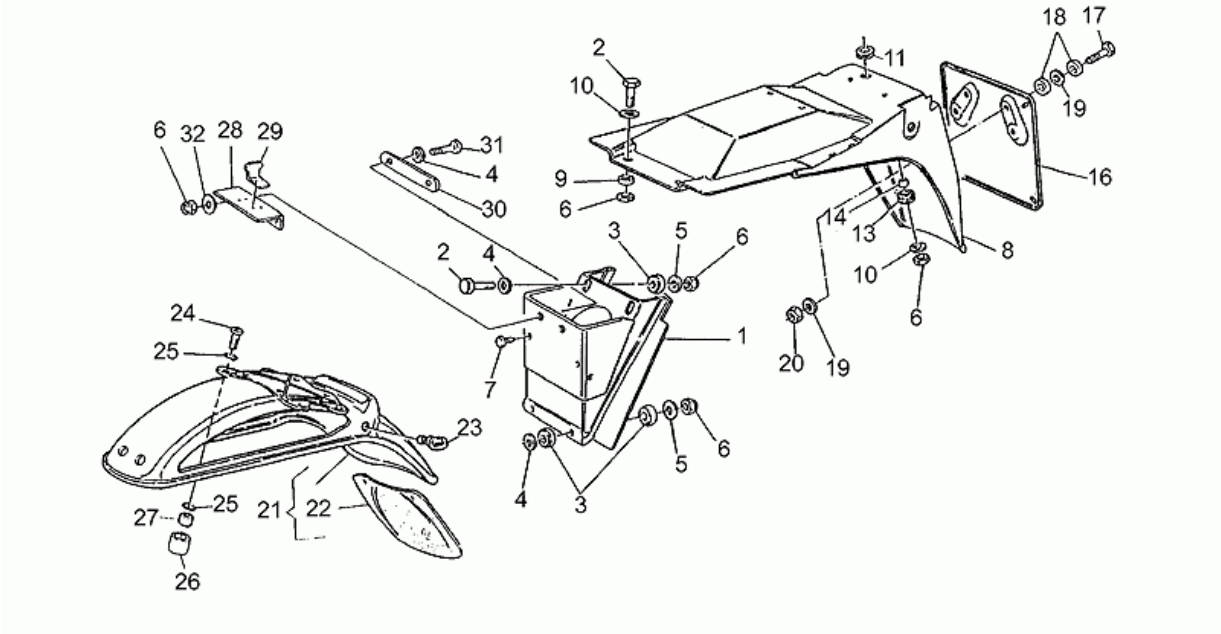

Pos.	Code	Description	Q.ty	Variants
30	GU23439210	Plaquette	1	
31	GU98054312	Vis	2	
32	GU95100118	Rondelle 6,2X18X1	2	

Assembly	CHASSIS
Code	33.15
Description	Repose-pieds bequille
Revision	1

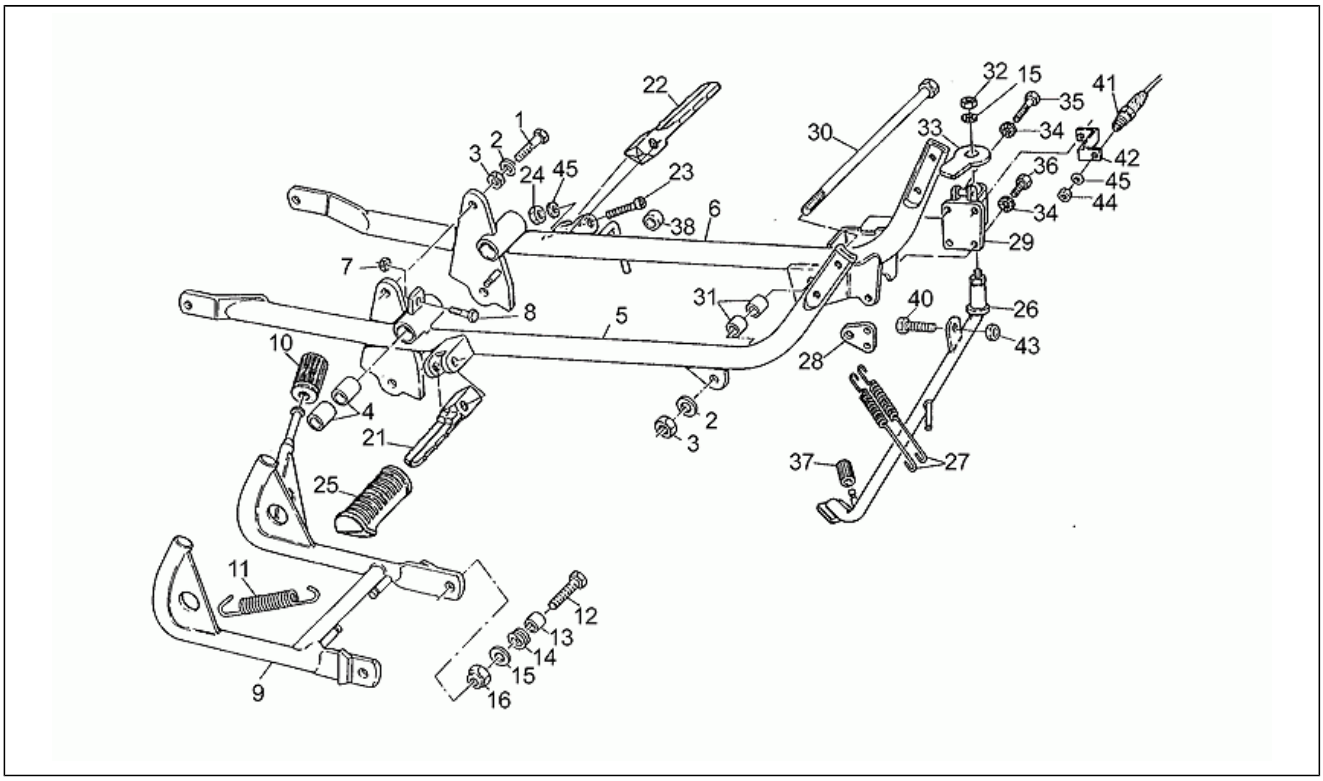

Pos.	Code	Description	Q.ty	Variants
1	GU98052565	Vis	2	
2	GU95004210	Rondelle 10,2x18x2	4	
3	GU92602210	Ecrou	4	
4	GU18252050	Bague 19 mm	4	
4	GU28252060	Douille 18 mm est.	4	
5	GU19420315	Bras d.	1	
6	GU19422115	Bras g.	1	
7	GU92602206	Ecrou	1	
8	GU98054322	Vis M6X22	1	
9	GU23430391	Béquille centrale	1	
10	GU13432640	Pédale en caoutch.	1	
11	GU12434001	Ressort rappel béq.	2	
12	GU98054530	Vis	2	
13	GU91181114	Entretoise	2	
14	GU94322215	Ressort	1	
15	GU95000210	Rondelle	3	
16	GU92630510	Ecrou M10x1,5	2	
21	GU28440760	Tuyau rep.-pieds av.d.	1	
22	GU28441860	Tuyau rep.-pieds av.g.	1	
23	GU98053435	Vis	2	
24	GU92602108	Ecrou	2	
25	GU28443201	Pédale en caoutch.	2	
26	GU19432016	Bras latérale noire	1	
27	GU19434069	Ressort	2	
28	GU18432760	Plaque	1	
29	GU13433440	Bloc	1	
30	GU53429500	Pivot M10x250	1	
31	GU19017000	Bague	2	

Assembly	CHASSIS
Code	33.15
Description	Repose-pieds bequille
Revision	1

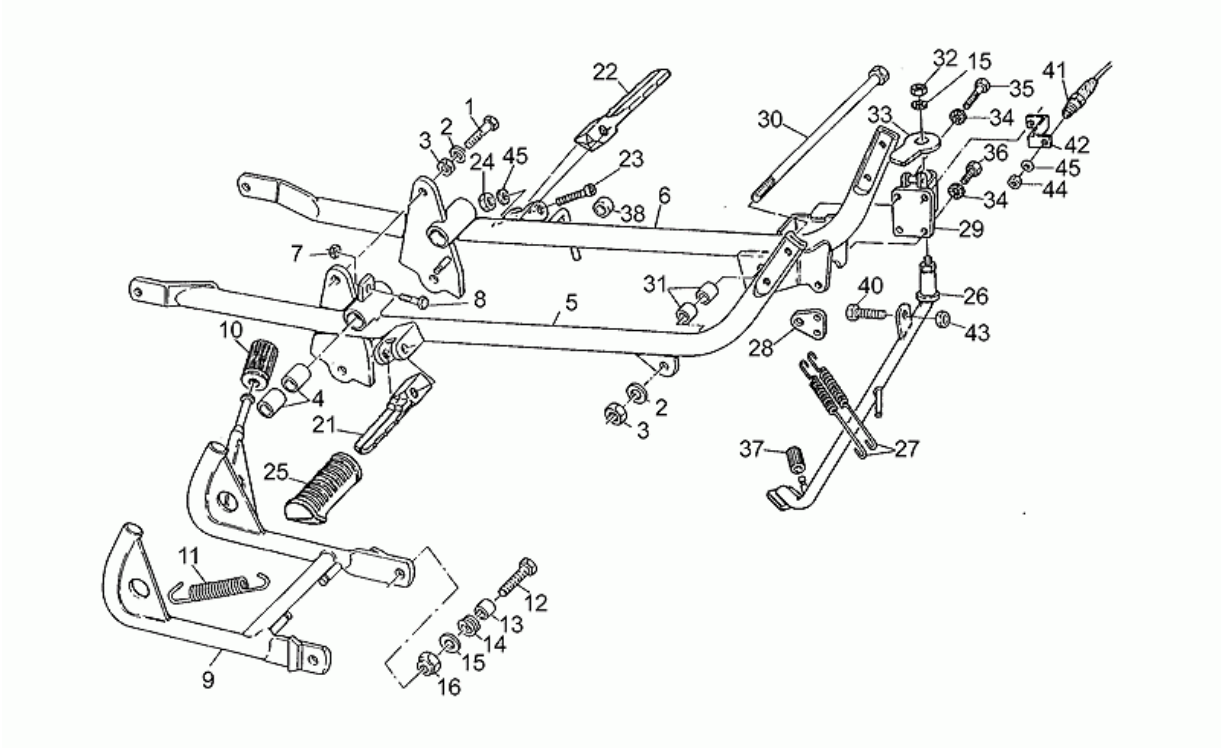

Pos.	Code	Description	Q.ty	Variants
32	GU92781100	Ecrou	1	
33	GU13432761	Bride	1	
34	GU95021108	Rondelle élastique	4	
35	GU98052440	Vis	1	
36	GU98054416	Vis M8X16	3	
37	GU13432640	Pédale en caoutch.	1	
38	GU12433000	Tampon	1	
40	GU98054216	Vis	2	
41	GU29752150	Interrupteur embrayage	1	
42	GU29433850	Bride	1	
43	GU92602205	Ecrou	1	
44	GU92602508	Ecrou M8X1	2	
45	GU61270300	Rondelle élastique 8x15x0,3	4	

Assembly	CHASSIS
Code	33.16
Description	Pinces frein
Revision	1

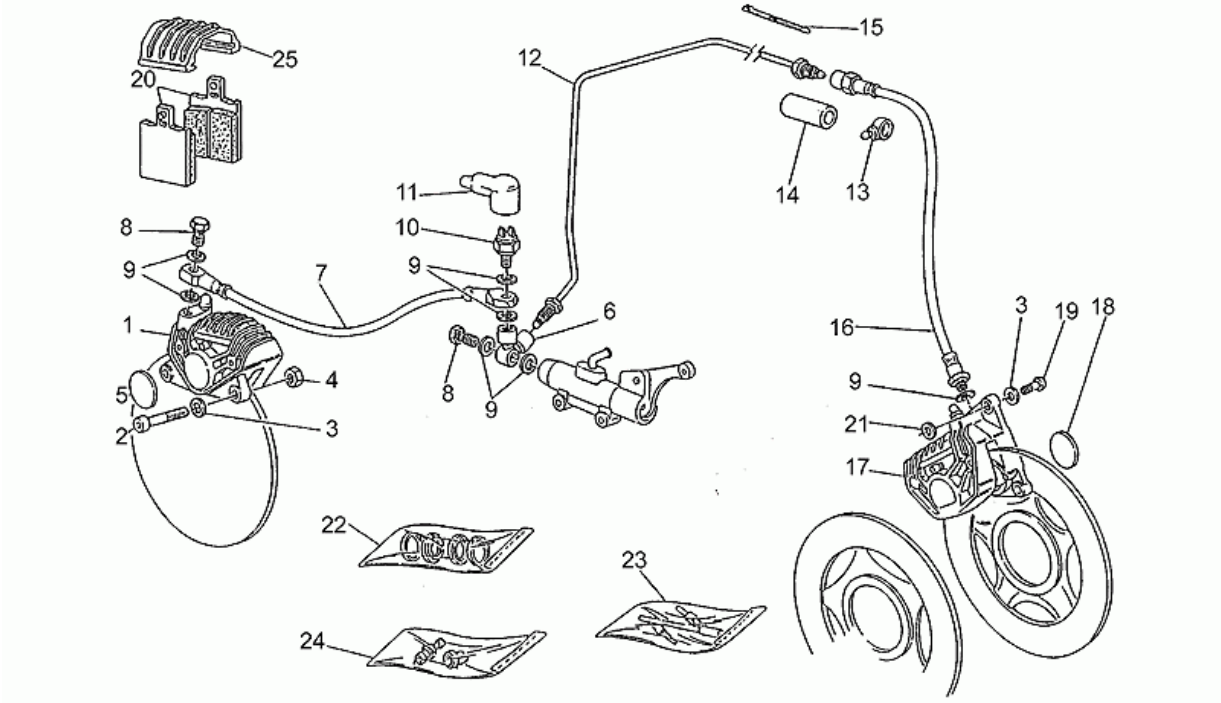

Pos.	Code	Description	Q.ty	Variants
1	GU23653011	Pince frein arrière	1	
2	GU98622422	Vis	2	
3	GU61270300	Rondelle élastique 8x15x0,3	2	
4	GU92602208	Ecrou M8X1,25	2	
5	GU19654900	Décalco pince AR	1	
6	GU19668000	Raccord	1	
7	GU19658660	Tube frein	1	
8	GU95990028	Vis tuyau huile *	2	
9	GU25656100	Garniture	7	
10	GU14657050	Interrupteur stop	1	
11	GU12735100	Capuchon	1	
12	GU19658735	Tuyau	1	
13	GU19436500	Oeillet	1	
14	GU17573860	Protection	1	
15	GU14609650	Collier 3,6x20,6	3	
16	GU17658860	Tube frein	1	
17	GU31652265	Pince frein AV D Grimeca	1	**Spécifications techniques:**See technical comm.n.298 of 1995[29895C]
18	GU19652700	Décalco pince	1	
19	GU98622422	Vis	2	
20	GU27654610	Plaquettes-paire BREMBO	2	
20	GU31654665	Plaquettes-paire GRIMECA	2	**Spécifications techniques:**See technical comm.n.298 of 1995[29895C]
21	GU95100250	Rondelle 8,5X18X0,5	1	
21	GU95100251	Rondelle 8,5X18X0,8	1	
22	GU39659000	Kit révision pince BREMBO	2	
22	GU66659031	Kit révision pince GRIMECA	1	**Spécifications techniques:**See technical comm.n.298 of 1995[29895C]

Assembly	CHASSIS
Code	33.16
Description	Pinces frein
Revision	1

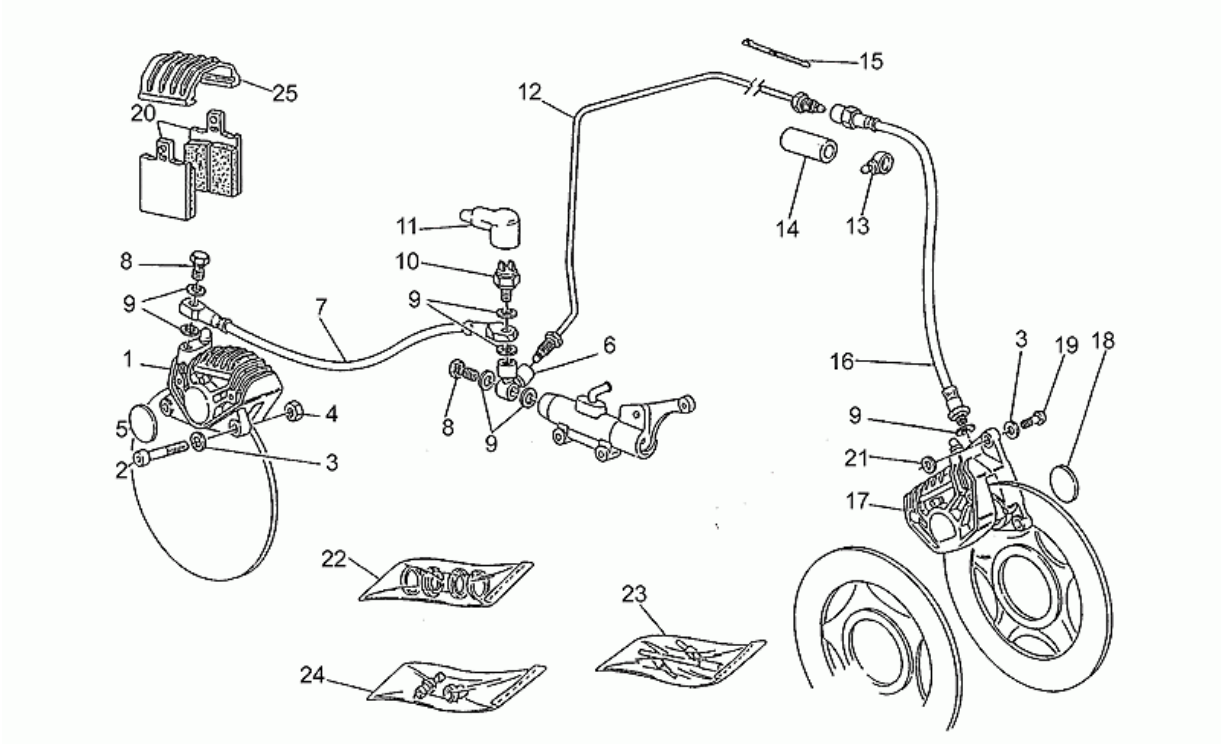

Pos.	Code	Description	Q.ty	Variants
23	GU31659165	Axes+ressort GRIMECA	2	**Spécifications techniques:**See technical comm.n.298 of 1995[29895C]
23	GU39659100	Axes+ressort BREMBO	2	
24	GU31659265	Purge+capuchon GRIMECA	1	**Spécifications techniques:**See technical comm.n.298 of 1995[29895C]
24	GU65659200	Purge+capuchon BREMBO D.6	2	
25	GU31654765	Couvercle pince frein GRIMECA	1	**Spécifications techniques:**See technical comm.n.298 of 1995[29895C]
25	GU39654700	Couvercle pince frein BREMBO	2	

Assembly	CHASSIS
Code	33.17
Description	Maît. cyl. frein AV
Revision	1

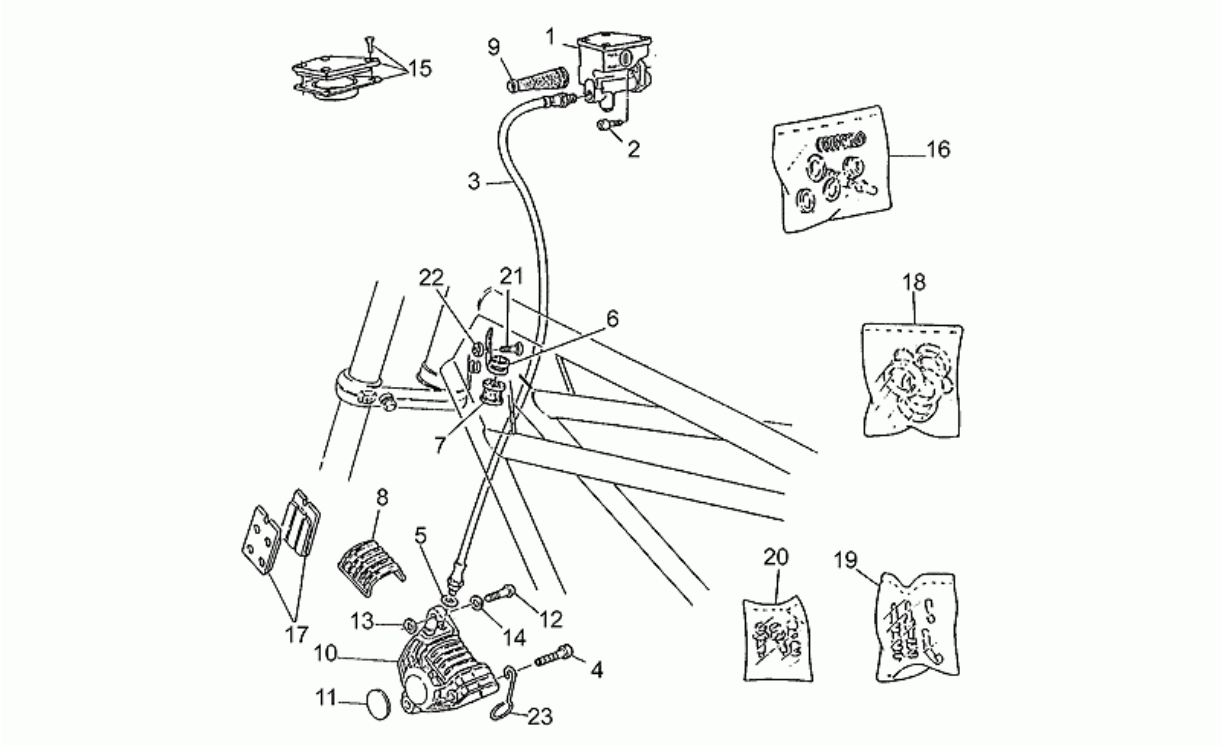

Pos.	Code	Description	Q.ty	Variants
1	GU29660250	Maît. cyl. frein AV	1	
2	GU98812216	Vis	2	
3	GU30657110	Tuyau	1	
4	GU98622425	Vis M8X25	1	
5	GU25656100	Garniture	2	
6	GU17658360	Collier	1	
7	GU17658260	Bague	1	
8	GU31654765	Couvercle pince frein GRIMECA	1	**Spécifications techniques:**See technical comm.n.298 of 1995[29895C]
8	GU39654700	Couvercle pince frein BREMBO	1	
9	GU23093870	Soufflet	1	
10	GU31652365	Pince frein AV G Grimeca	1	**Spécifications techniques:**See technical comm.n.298 of 1995[29895C]
11	GU19652700	Décalco pince	1	
12	GU98622422	Vis	2	
13	GU95100250	Rondelle 8,5X18X0,5	1	
13	GU95100251	Rondelle 8,5X18X0,8	1	
14	GU61270300	Rondelle élastique 8x15x0,3	2	
15	GU23661110	Couvercle	1	
16	GU23659310	Kit révision pompe frein	1	
17	GU27654610	Plaquettes-paire BREMBO	1	
17	GU31654665	Plaquettes-paire GRIMECA	2	**Spécifications techniques:**See technical comm.n.298 of 1995[29895C]
18	GU39659000	Kit révision pince BREMBO	1	
18	GU66659031	Kit révision pince GRIMECA	1	**Spécifications techniques:**See technical comm.n.298 of 1995[29895C]
19	GU31659165	Axes+ressort GRIMECA	2	**Spécifications techniques:**See technical comm.n.298 of 1995[29895C]
19	GU39659100	Axes+ressort BREMBO	1	

Assembly	CHASSIS
Code	33.17
Description	Maît. cyl. frein AV
Revision	1

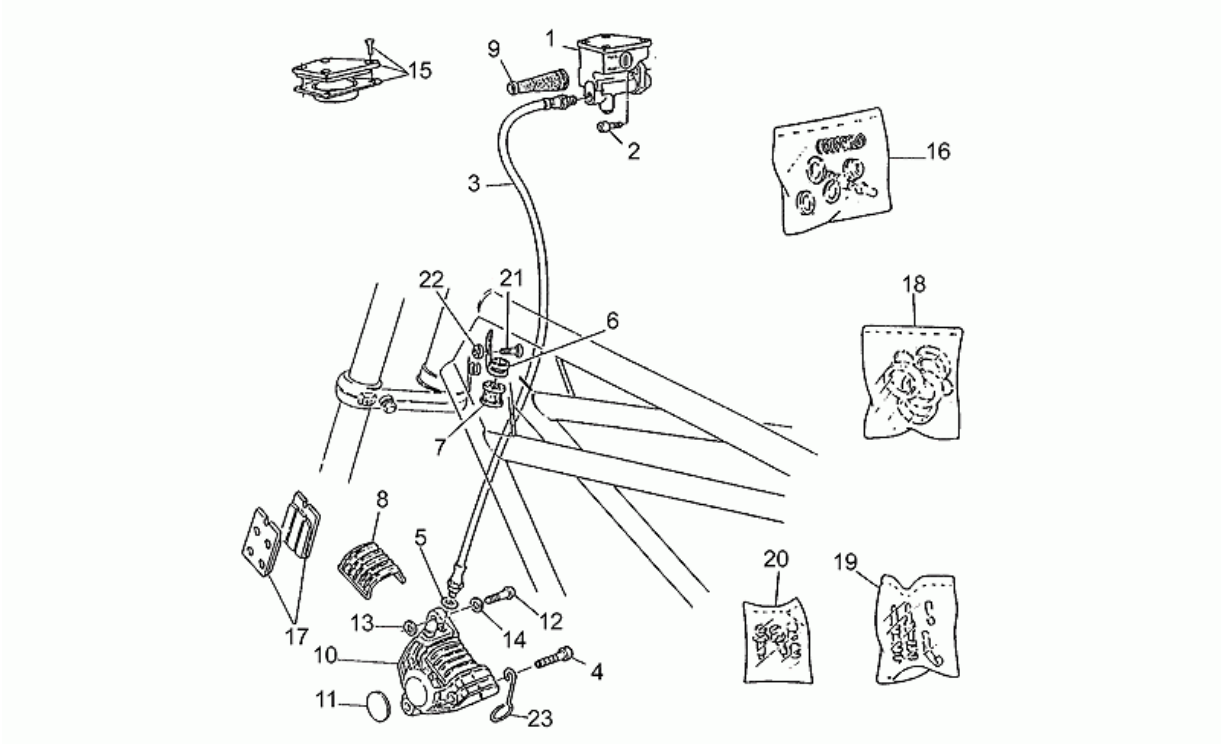

Pos.	Code	Description	Q.ty	Variants
20	GU31659265	Purge+capuchon GRIMECA	1	**Spécifications techniques:**See technical comm.n.298 of 1995[29895C]
20	GU65659200	Purge+capuchon BREMBO D.6	1	
21	GU98280410	Vis	1	
22	GU92630104	Ecrou M4x0,7	1	
23	GU23655770	Guide-câble	1	

Assembly	CHASSIS
Code	33.18
Description	Pompe frein arrière
Revision	1

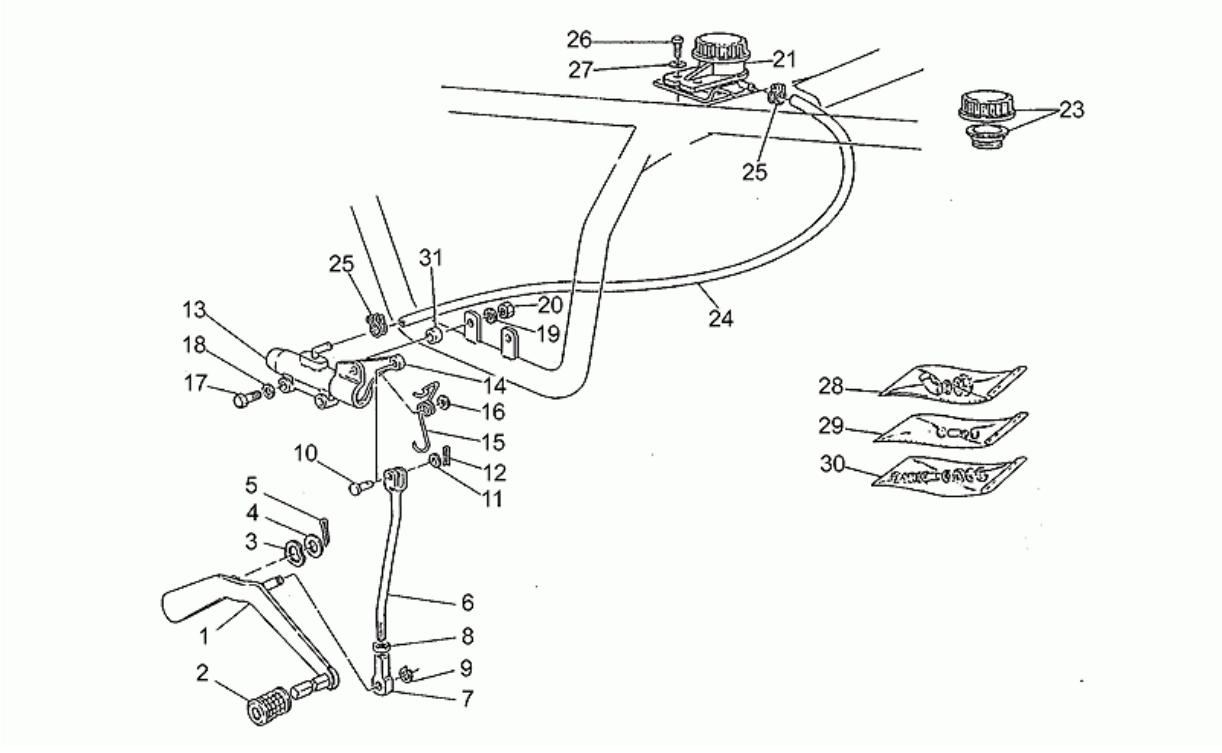

Pos.	Code	Description	Q.ty	Variants
1	GU19677000	Levier de frein AR	1	
2	GU14251001	Caoutchouc	1	
3	GU95129260	Rondelle élastique	1	
4	GU95004215	Rondelle plate	1	
5	GU95500227	Goupille	1	
6	GU19675000	Tirant pour boite vitesse cpl.	1	
7	GU18257551	Bloc	1	
8	GU92690073	Ecrou	1	
9	GU90271003	Bague seeger	1	
10	GU95770265	Goupille	1	
11	GU95129110	Rondelle	1	
12	GU95500222	Goupille	1	
13	GU31666990	Maît.cyl. frein AR	1	
14	GU19667500	Levier de frein AR	1	
15	GU19667600	Ressort man.ferin ar.	1	
16	GU95004206	Rondelle 6,15x11x0,8	1	
17	GU98054330	Vis	2	
18	GU95000206	Rondelle	2	
19	GU95021106	Rondelle évent.	2	
20	GU92602206	Ecrou	2	
21	GU65663500	Réserv. huile freins	1	
23	GU17661052	Bouchon réservoir	1	
24	GU00823950050	Tuyau huile	1	
25	GU19157800	Collier	2	
26	GU98054216	Vis	2	
27	GU95100059	Rondelle 5,25x14x1,5	2	
28	GU19659500	Gr.révision raccordde pomp	1	
29	GU19659600	Kit révision levier	1	

Assembly	CHASSIS
Code	33.18
Description	Pompe frein arrière
Revision	1

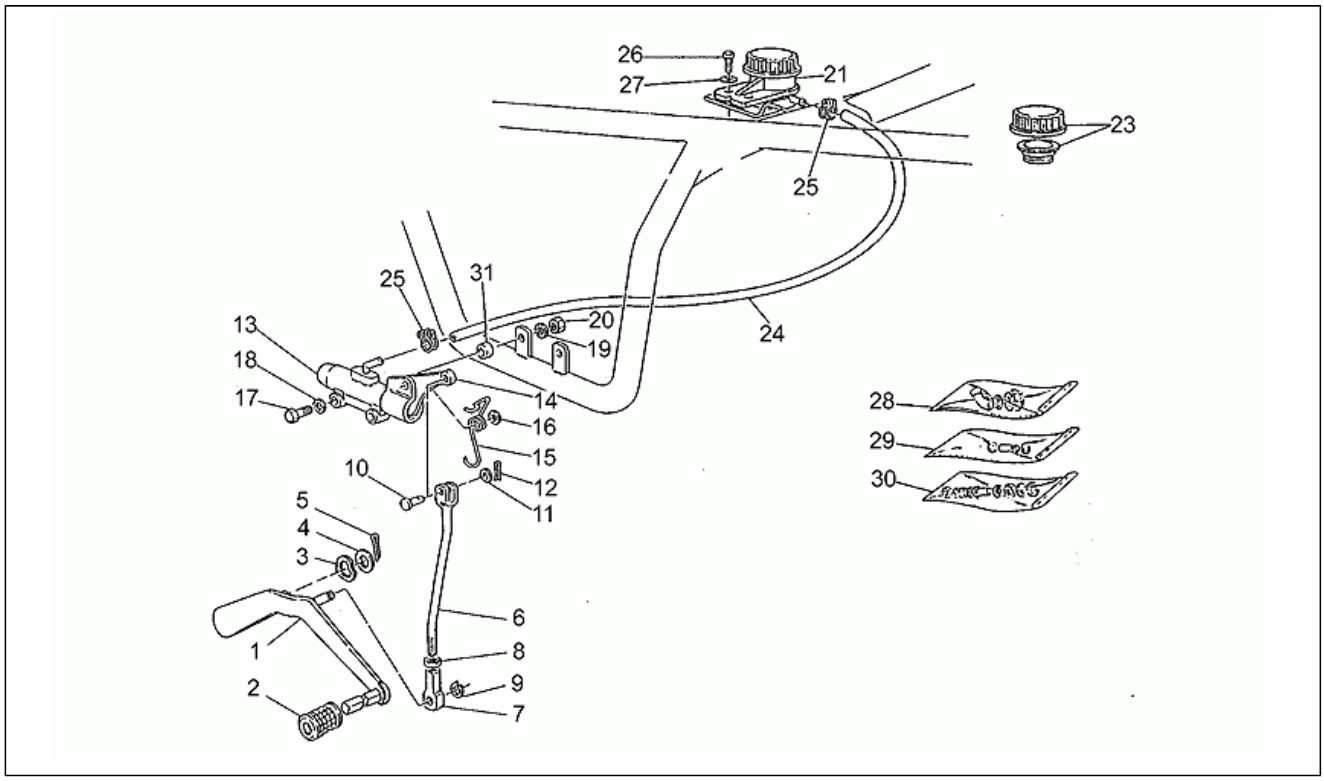

Pos.	Code	Description	Q.ty	Variants
30	GU17659350	Kit révision pompe	1	
31	GU91180705	Entretoise 7X12X5	2	

Assembly	CHASSIS
Code	33.19
Description	Roue Av.
Revision	1

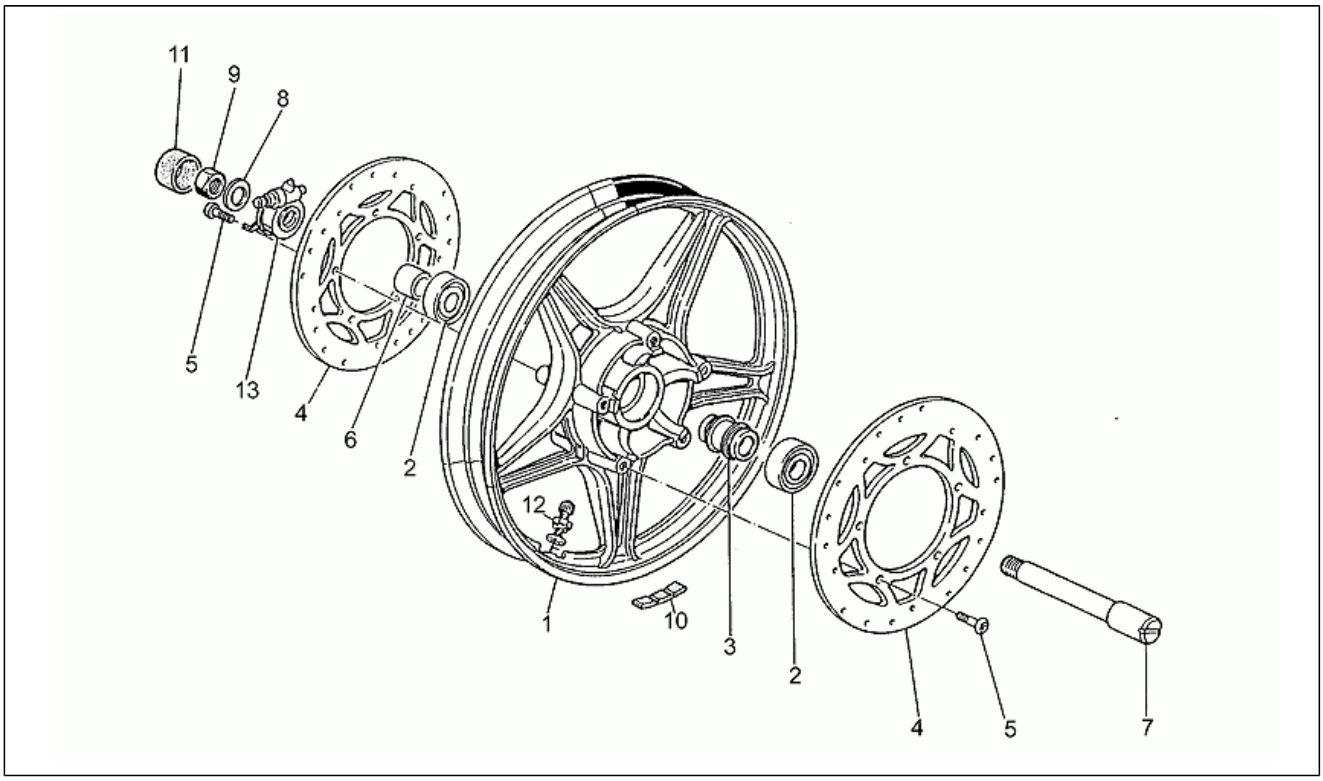

Pos.	Code	Description	Q.ty	Variants
1	GU14610370	Roue avant grise	1	
2	GU92204221	Roulement	2	
3	GU17615360	Entretoise interne roulements	1	
4	GU28613300	Disque frein	2	
5	GU98230825	Vis	10	
6	GU31616315	Entretoise	1	
7	GU28614100	Axe de roue AV	1	
8	GU95004217	Rondelle 17X27X2	1	
9	GU92602516	Ecrou M16X1,5	1	
10	GU14616150	Contrepoids	2	
11	GU62616800	Bouchon	2	
12	GU28617760	Soupape air	1	
13	GU31762561	Renvoi compteur km	1	

Assembly	CHASSIS
Code	33.20
Description	Roue arrière
Revision	1

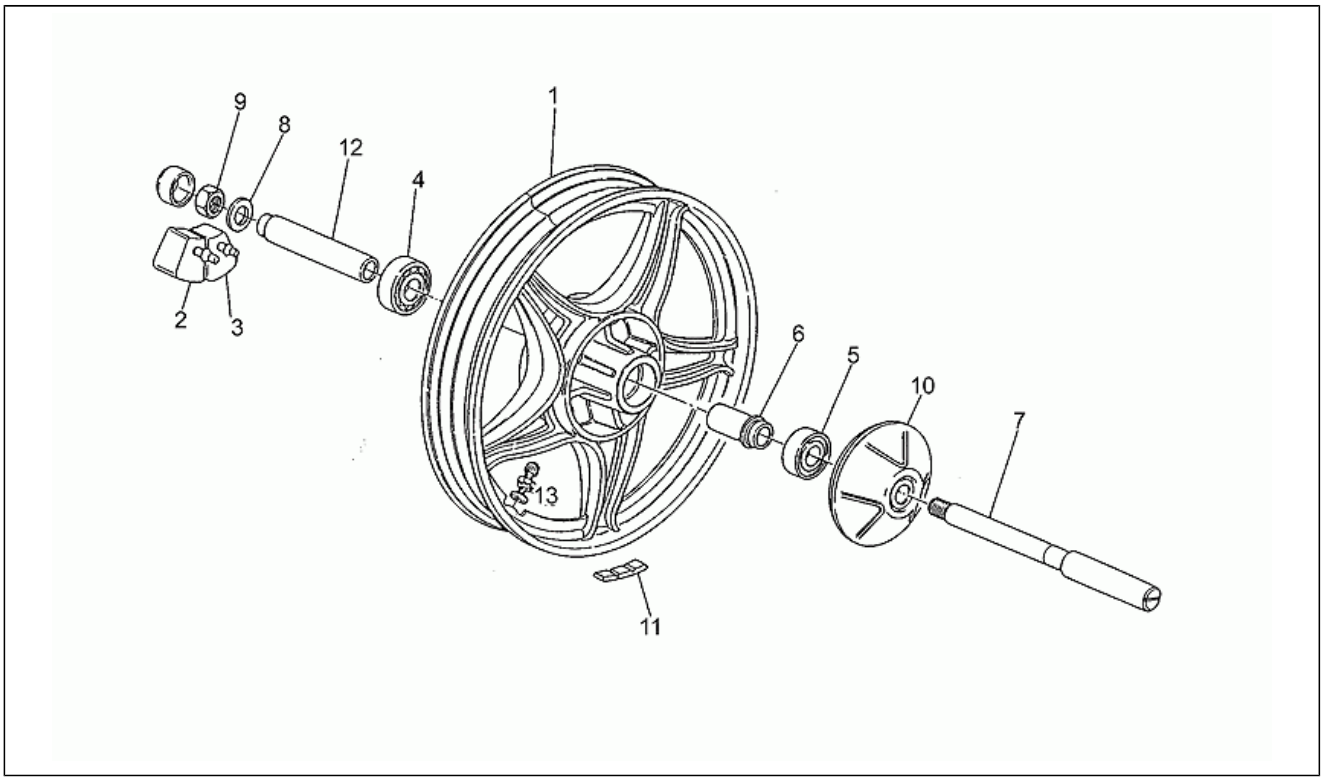

Pos.	Code	Description	Q.ty	Variants
1	GU20630620	Roue arrière grise	1	
2	GU19632501	Joint en caoutchouc d.	6	
3	GU19632502	Joint en caoutchouc g.	6	
4	GU92204218	Roulement	1	
5	GU92204217	Roulement	1	
6	GU19633935	Entretoise interne roulements	1	
7	GU23633380	Axe de roue AR	1	
8	GU14634400	Rondelle	1	
9	GU92602316	Ecrou M6X1,5	1	
10	GU19636400	Protection	1	
11	GU14616150	Contrepoids	1	
12	GU19634100	Entretoise	1	
13	GU28617760	Soupape air	1	

Assembly	CHASSIS
Code	33.21
Description	Sirènes deux tons Sonora
Revision	1

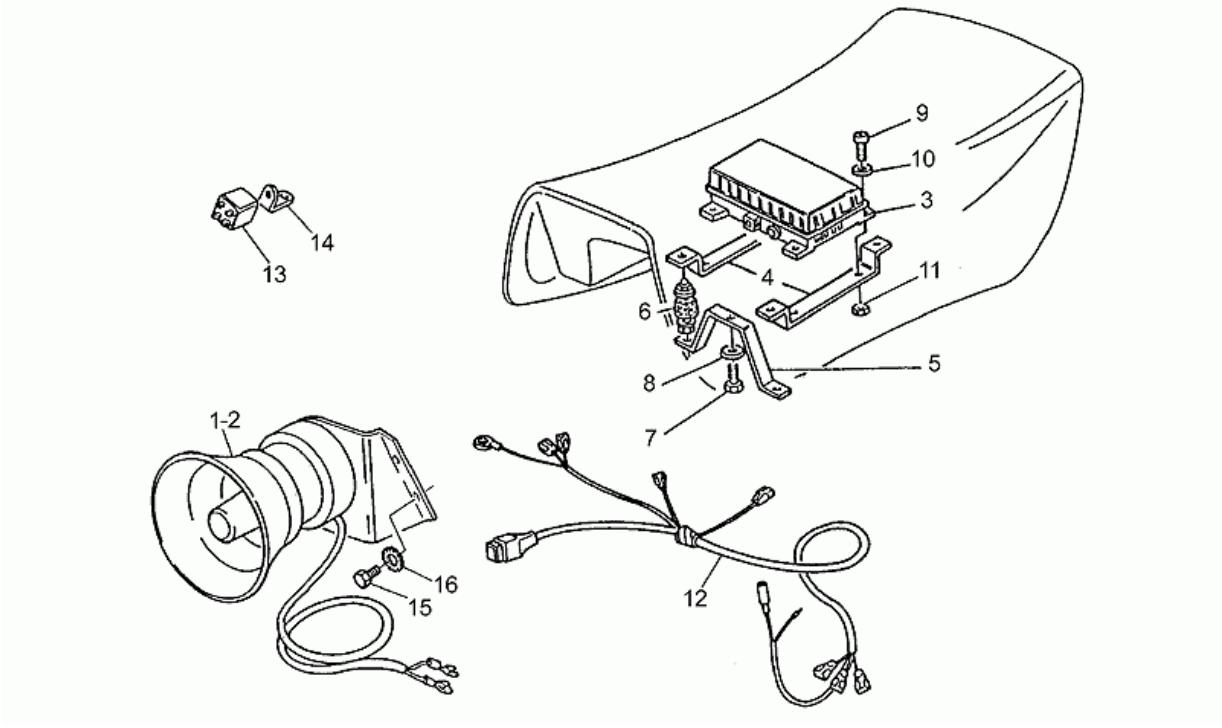

Pos.	Code	Description	Q.ty	Variants
1	GU19743615	RH siren cpl.	1	
2	GU19743616	LH siren cpl.	1	
3	GU28737680	Centrale électronique	1	
4	GU28737880	Support	2	
5	GU28736780	Cavalier	2	
6	GU17737983	Silentbloc	4	
7	GU98054212	Vis	2	
8	GU95100059	Rondelle 5,25x14x1,5	2	
9	GU98200412	Vis	4	
10	GU95000204	Rondelle	4	
11	GU92630104	Ecrou M4x0,7	4	
12	GU28726147	Câblage sirènes	1	
13	GU28732545	Relais sirènes SWF	1	
14	GU28732946	Support relais	1	
15	GU98054416	Vis M8X16	4	
16	GU95021108	Rondelle élastique	4	

Assembly	CHASSIS
Code	33.22
Description	Suspension avant/arriere
Revision	1

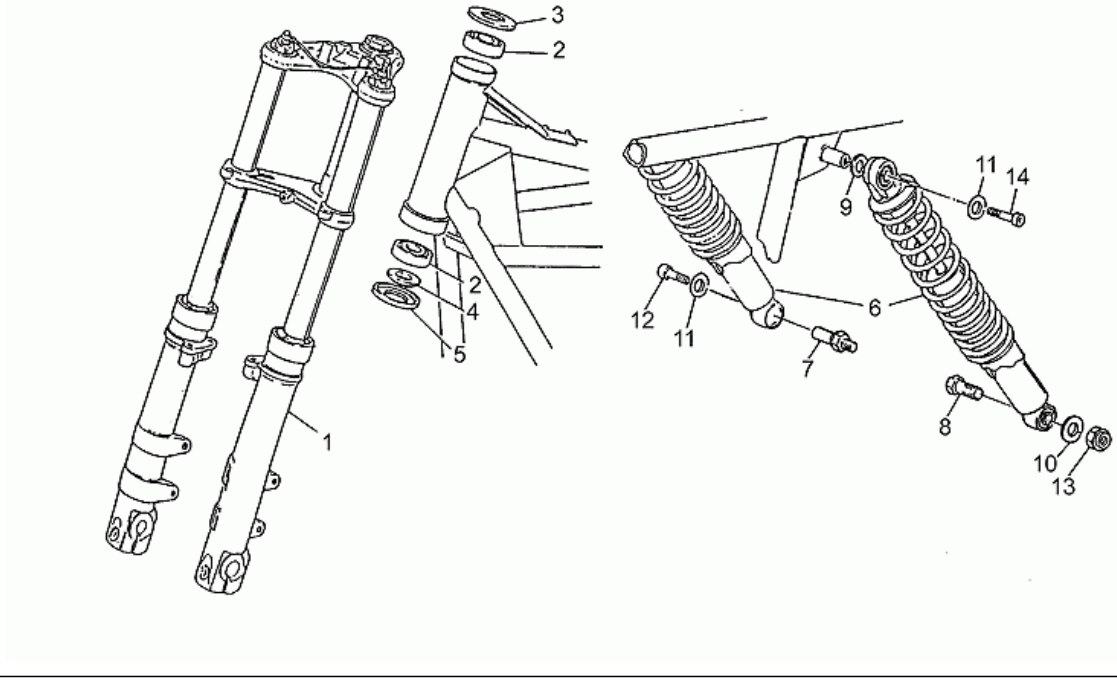

Pos.	Code	Description	Q.ty	Variants
1	GU19490215	Fourche avant bleue	1	
2	GU92249225	Roulement roul.con.	2	
3	GU14494600	Rondelle	1	
4	GU14516700	Rondelle d'appui	1	
5	GU14517000	Pare-poussière	1	
6	GU28999263	Amortisseur AR	2	**Spécifications techniques:**Paioli[P]
7	GU23555281	Pivot	1	
8	GU23555280	Pivot	1	
9	GU91181407	Entretoise	2	
10	GU95100235	Entretoise	1	
11	GU95021110	Rondelle évent.	1	
12	GU98822416	Vis	4	
13	GU92602410	Ecrou	1	
14	GU98620455	Vis	2	

Assembly	CHASSIS
Code	33.23
Description	Chassis
Revision	1

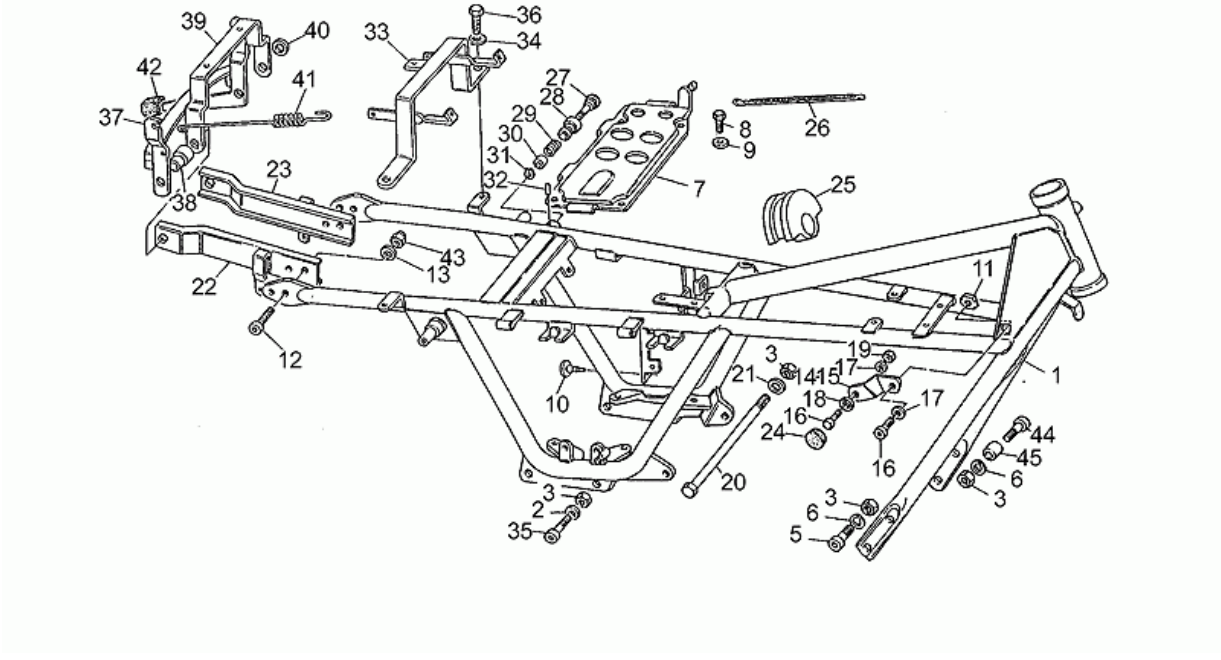

Pos.	Code	Description	Q.ty	Variants
1	GU19400115	Chassis	1	
2	GU95004210	Rondelle 10,2x18x2	4	
3	GU92602210	Ecrou	7	
5	GU98622525	Vis 25 mm	2	
6	GU95120105	Rondelle	4	
7	GU19418200	Plaque	1	
8	GU98054418	Vis	4	
9	GU95004208	Rondelle	4	
10	GU19705900	Tampon	4	
11	GU92660601	Ecrou en cage	2	
12	GU98054416	Vis M8X16	4	
13	GU61270300	Rondelle élastique 8x15x0,3	4	
14	GU23401290	Support droite	1	
15	GU23401390	Support gauche	1	
16	GU98054316	Vis M6X16	4	
17	GU95004206	Rondelle 6,15x11x0,8	4	
18	GU39103500	Disque	2	
19	GU92630106	Ecrou M6x1	2	
20	GU98110199	Pivot M10x205	1	
21	GU95004210	Rondelle 10,2x18x2	5	
22	GU23439190	Support droite	1	
23	GU23439290	Support gauche	1	
24	GU39103400	Tampon	2	
25	GU14107100	Tampon	1	
26	GU14609650	Collier 3,6x20,6	1	
27	GU28463045	Poignée	1	
28	GU28462945	Douille	1	
29	GU94321119	Ressort	1	

Assembly	CHASSIS
Code	33.23
Description	Chassis
Revision	1

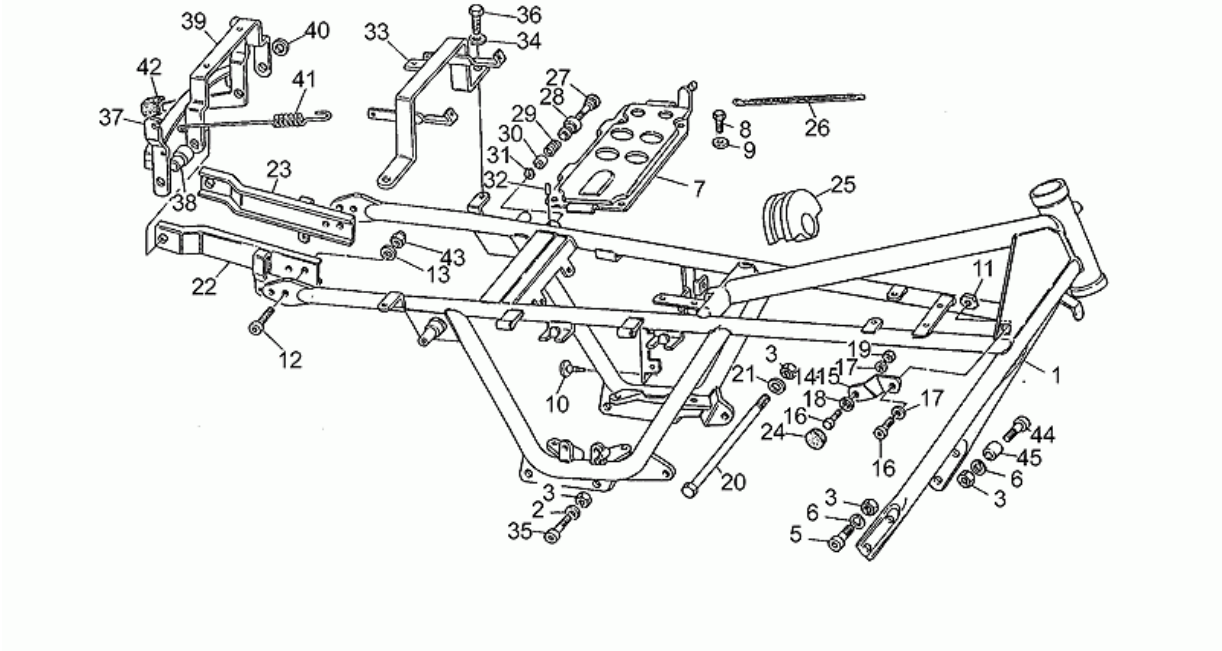

Pos.	Code	Description	Q.ty	Variants
30	GU28462645	Entretoise	1	
31	GU90280006	Bague de butée	1	
32	GU35782880	Tige filetée	1	
33	GU28463545	Support radio	1	
34	GU95004206	Rondelle 6,15x11x0,8	2	
35	GU98052555	Vis	2	
36	GU98054318	Vis	2	
37	GU23478890	Dispositif décrochage	1	
38	GU41432100	Entretoise	2	
39	GU23463690	Support radio	1	
40	GU91180810	Entretoise	2	
41	GU19434000	Ressort	2	
42	GU14461400	Caoutchouc	1	
43	GU92602208	Ecrou M8X1,25	4	
44	GU98620540	Vis M10X40	2	
45	GU91181112	Entretoise	2	

Assembly	CHASSIS
Code	33.25
Description	Alimentation carburant
Revision	1

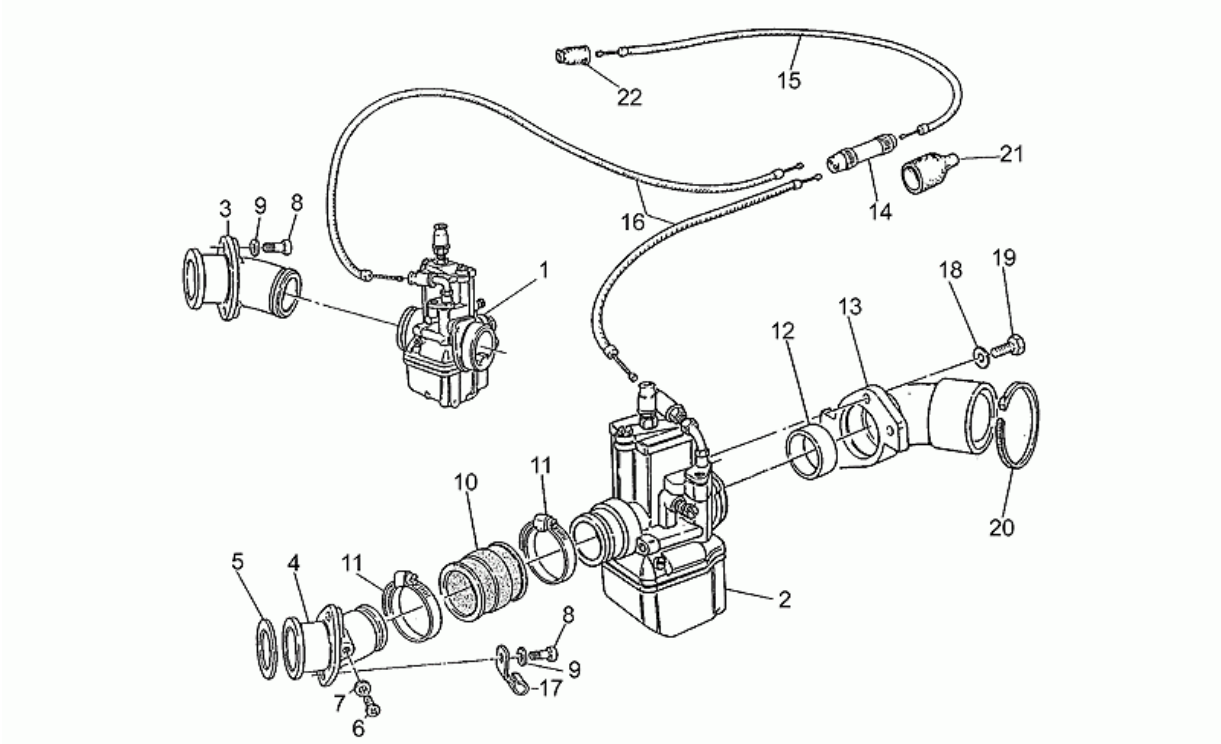

Pos.	Code	Description	Q.ty	Variants
1	GU19112615	Carburateur droit VHBZ 20FD	1	
2	GU19112616	Carburateur gauche VHBZ 20FS	1	
3	GU19115035	Pipe d.	1	
4	GU19115036	Pipe g.	1	
5	GU19115520	Joint	2	
6	GU98310610	Vis	2	
7	GU95100116	Rondelle 6,25x10x1,5	2	
8	GU98822325	Vis	4	
9	GU61013800	Rondelle spéciale	4	
10	GU19114320	Manchon	2	
11	GU93305031	Collier	4	
12	GU90706315	Bague d'étanchéité	2	
13	GU19114400	Collecteur	2	
14	GU30607910	Dedoublereur	1	
15	GU28132833	Câble starter	1	
16	GU27133515	Câble starter	2	
17	GU19718000	Collier	2	
18	GU95004205	Rondelle	4	
19	GU98054214	Vis	4	
20	GU14609650	Collier 3,6x20,6	3	
21	GU12717600	Capuchon	1	
22	GU29132750	Caoutchouc	1	

Assembly	CHASSIS
Code	33.32
Description	Groupe echappement
Revision	1

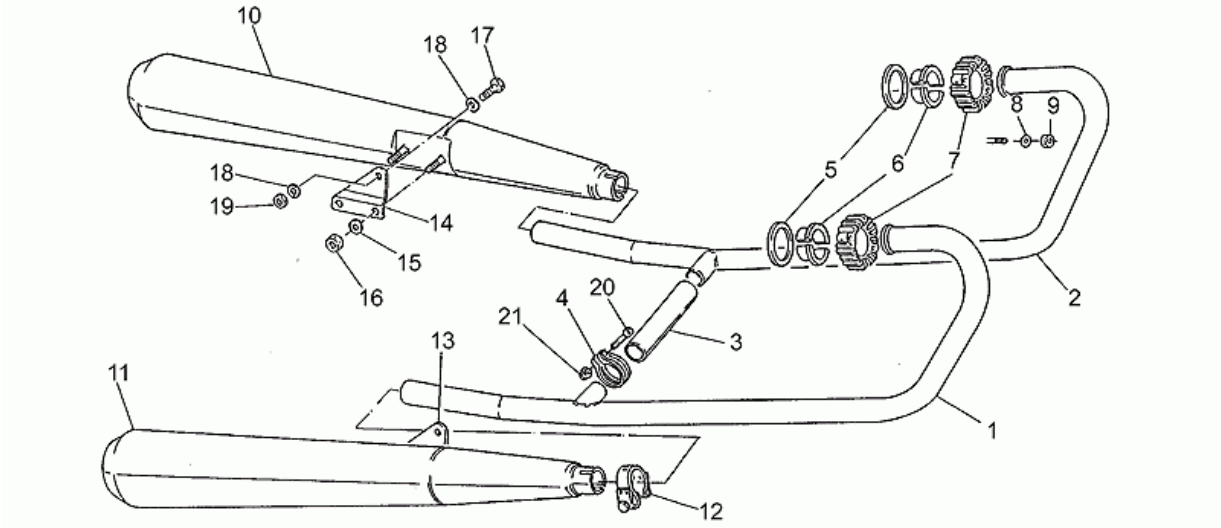

Pos.	Code	Description	Q.ty	Variants
1	GU19120707	Tuyau échappement d.	1	
2	GU19120706	Tuyau échappement gche	1	
3	GU19121135	Tuyau d'échappement	1	
4	GU61126920	Collier	2	
5	GU19025280	Joint	2	
6	GU61025400	Entretoise	4	
7	GU19121050	Bague échappement	2	
8	GU61013800	Rondelle spéciale	4	
9	GU92701062	Ecrou	4	
10	GU19122936	Silencieux G	1	
11	GU19123036	Silencieux D	1	
12	GU19123435	Collier	2	
13	GU19128660	Plaque d.	1	
14	GU19128760	Plaque g.	1	
15	GU61270300	Rondelle élastique 8x15x0,3	4	
16	GU92602208	Ecrou M8X1,25	4	
17	GU98054535	Vis M10X35	2	
18	GU95021110	Rondelle évent.	4	
19	GU92602410	Ecrou	2	
20	GU61127520	Vis	2	
21	GU61127220	Bague	2	

Assembly	MOTEUR
Code	34.24
Description	Arbre moteur
Revision	1

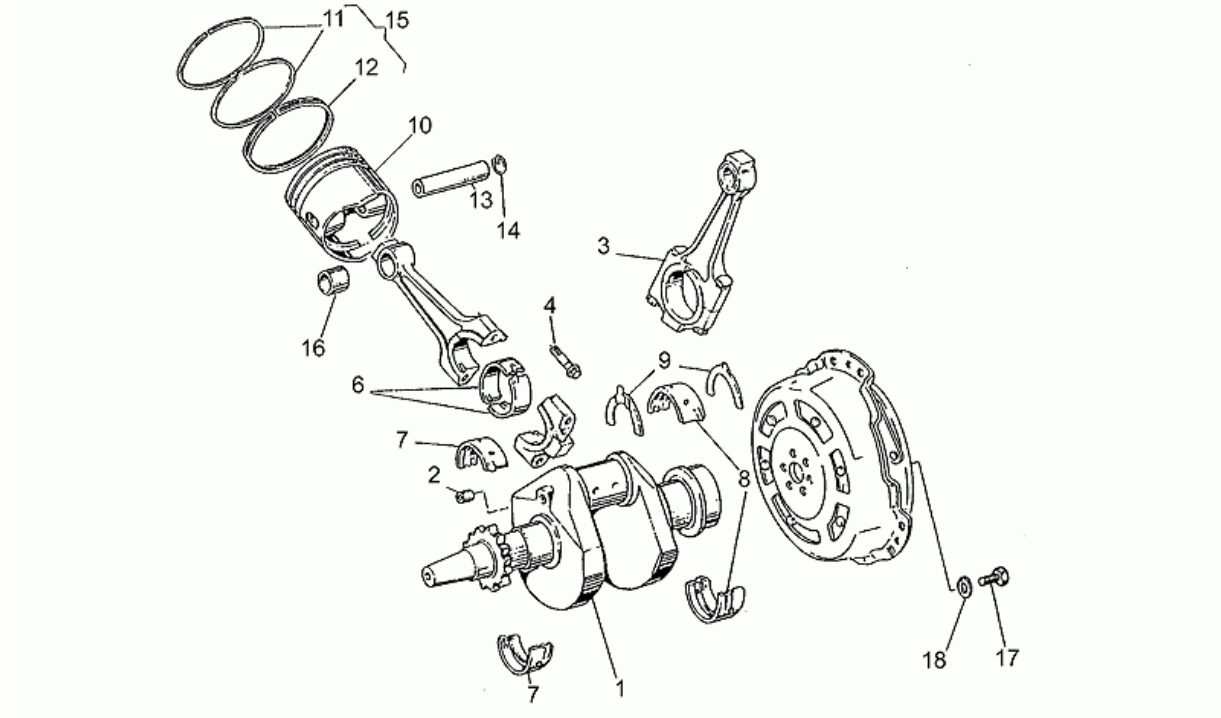

Pos.	Code	Description	Q.ty	Variants
1	GU19064121	Arbre moteur cpl.	1	
2	GU19065400	Bouchon	1	
3	GU19061521	Bielle	2	
4	GU19062221	Vis	4	
6	GU19062022	Demi-coussinet	4	
7	GU19065623	Demi-couss.de vilebr.av.	2	
8	GU19066522	Demi-couss.de vilebr.ar.	2	
9	GU31066480	Butée	2	
10	GU19060421	Piston	2	
11	GU19060700	Segment d'étanchéité	4	
12	GU19061000	Segment d'étanchéité	2	
13	GU19061220	Axe	2	
14	GU19061320	Bague de butée	4	
15	GU19060600	Ensemble de segments	2	
16	GU19061821	Bague	2	
17	GU19067700	Vis	6	
18	GU14615901	Rondelle 8,4X13X0,8	6	

Assembly	MOTEUR
Code	34.26
Description	Boîte de vitesses
Revision	1

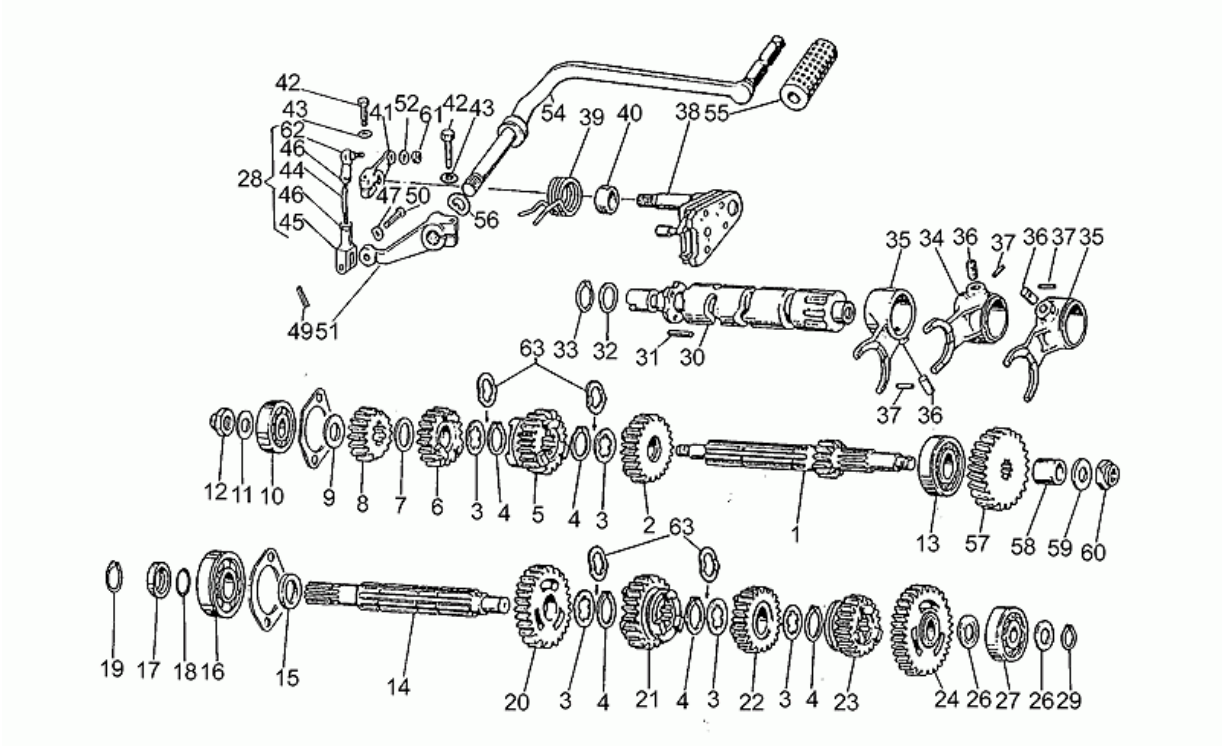

Pos.	Code	Description	Q.ty	Variants
1	GU19210520	Arbre primaire Z=11	1	
2	GU19212020	Engrenage 5a AS Z=22	1	
3	GU19215420	Rondelle éventail mm1	5	
4	GU90271220	Bague seeger	5	
5	GU19211820	Engrenage 4a AS Z=22	1	
6	GU19211420	Engrenage 3a AS Z=18	1	
7	GU19214620	Rondelle éventail	1	
8	GU19211320	Engrenage	1	
9	GU19212800	Rondelle	1	
10	GU92201415	Roulement à billes	1	
11	GU39238100	Rondelle d'appui	1	
12	GU10054100	Ecrou	1	
13	GU92201220	Roulement 20X47X14	1	
14	GU19213620	Arbre secondaire	1	
15	GU19212900	Entretoise	1	
16	GU92201220	Roulement 20X47X14	1	
17	GU19213720	Entretoise	1	
18	GU90706188	Bague d'étanchéité 18,77X1,78	1	
19	GU90271121	Bague seeger	1	
20	GU19214501	Engrenage	1	
21	GU19214820	Engrenage	1	
22	GU19215121	Engrenage	1	
23	GU19215220	Engrenage	1	
24	GU19214001	Engrenage	1	
26	GU35214300	Cale	2	
27	GU92201415	Roulement à billes	1	
28	GU19257701	Tirant pour boite vitesse cpl.	1	
29	GU90271115	Bague seeger	1	

Assembly	MOTEUR
Code	34.26
Description	Boîte de vitesses
Revision	1

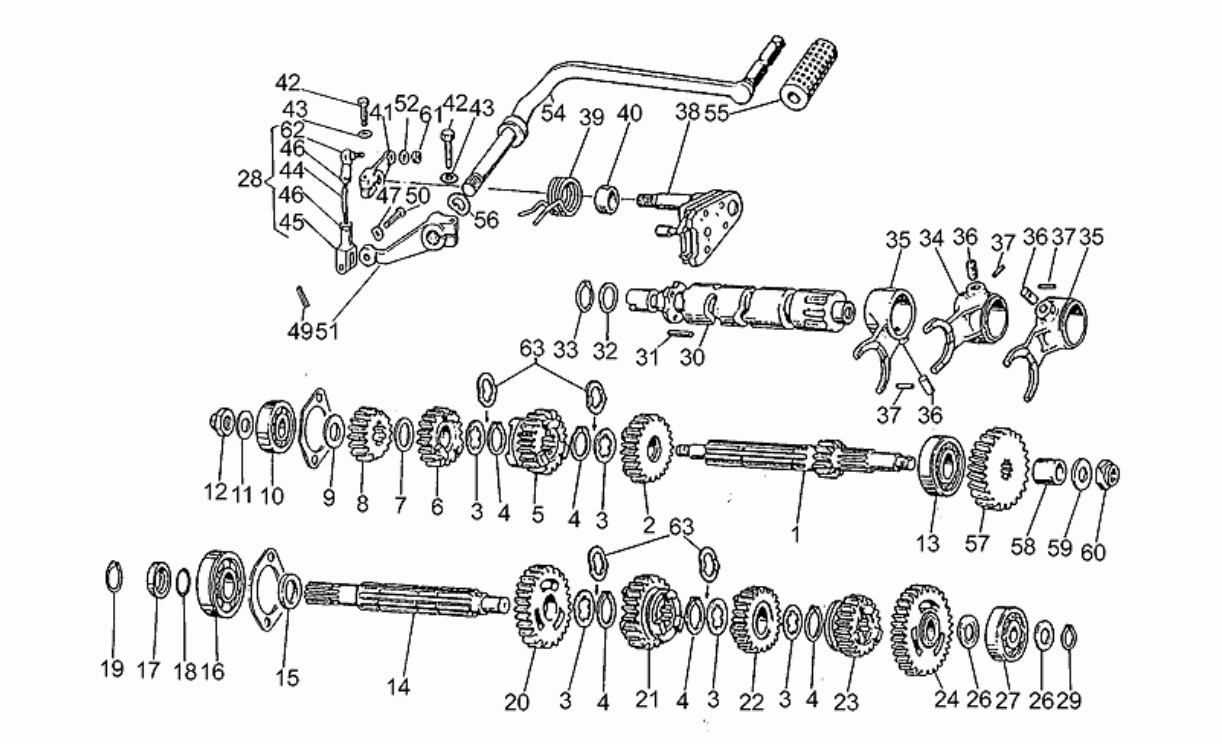

Pos.	Code	Description	Q.ty	Variants
30	GU19234420	Desmodromique	1	
31	GU19234600	Tige	4	
32	GU19355300	Cale 1 mm	1	
33	GU90271020	Anneau élastique	1	
34	GU19231220	Fourchette AP	1	
35	GU19231020	Fourchette AS	2	
36	GU92297909	Rouleau	3	
37	GU95520316	Goupille	3	
38	GU20999520	Kit présélecteur	1	**Spécifications techniques:**See spare parts comm.n.013 of 1997[01397N]
39	GU28238261	Ressort	1	**Spécifications techniques:**See spare parts comm.n.013 of 1997[01397N]
39	GU61238200	Ressort	1	
40	GU20208520	Entretoise	1	**Spécifications techniques:**See spare parts comm.n.013 of 1997[01397N]
40	GU91182010	Bague	1	
41	GU19258220	Levier de commande	1	
42	GU98052325	Vis	2	
43	GU95021106	Rondelle évent.	2	
44	GU18257950	Tirant	1	
45	GU12629800	Fourche	1	
46	GU95602206	Ecrou	2	
47	GU95129110	Rondelle	1	
49	GU95500222	Goupille	1	
50	GU95770265	Goupille	1	
51	GU19256920	Levier	1	
52	GU61013800	Rondelle spéciale	1	
54	GU19252900	Levier boîte de vitesses	1	
55	GU14251001	Caoutchouc	1	

Assembly	MOTEUR
Code	34.26
Description	Boîte de vitesses
Revision	1

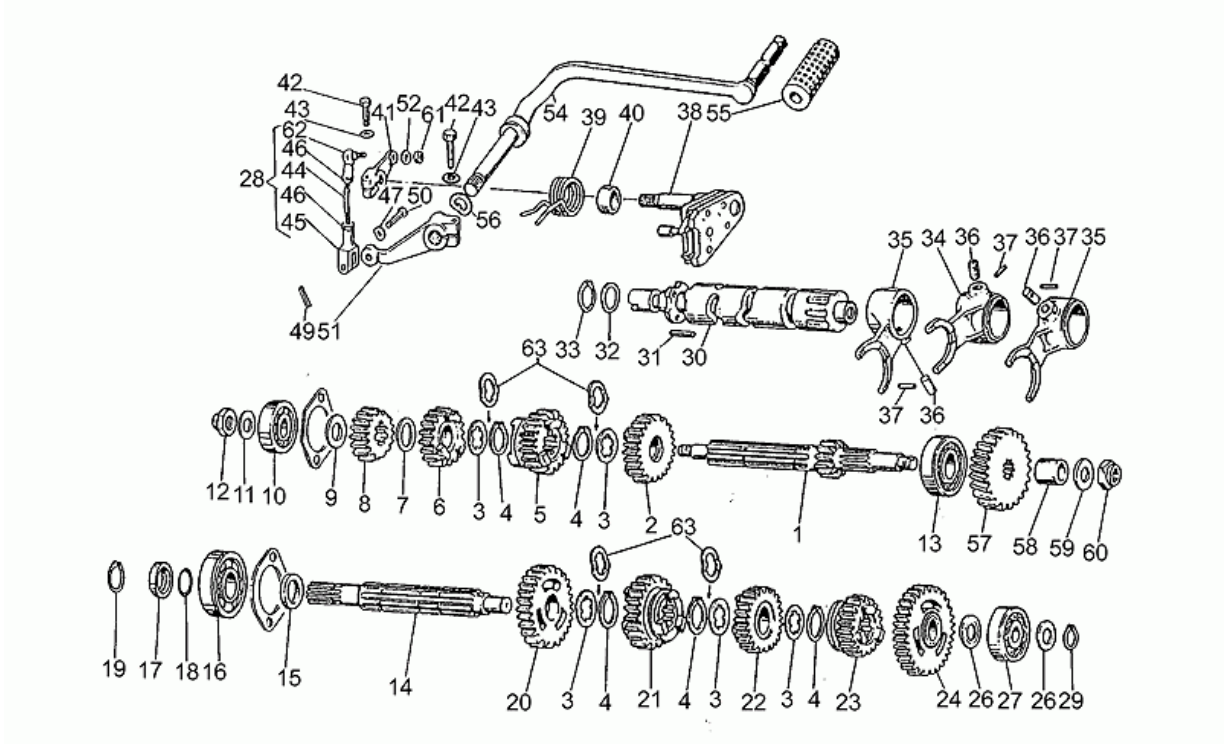

Pos.	Code	Description	Q.ty	Variants
56	GU95129260	Rondelle élastique	1	
57	GU27211110	Engrenage renvoi Z=24	1	
58	GU19266720	Bague	1	
59	GU39238100	Rondelle d'appui	1	
60	GU10054100	Ecrou	1	
61	GU92630106	Ecrou M6x1	1	
62	GU18258101	Rotule	1	
63	GU19214320	Rondelle	4	

Assembly	MOTEUR
Code	34.27
Description	Carburateurs
Revision	1

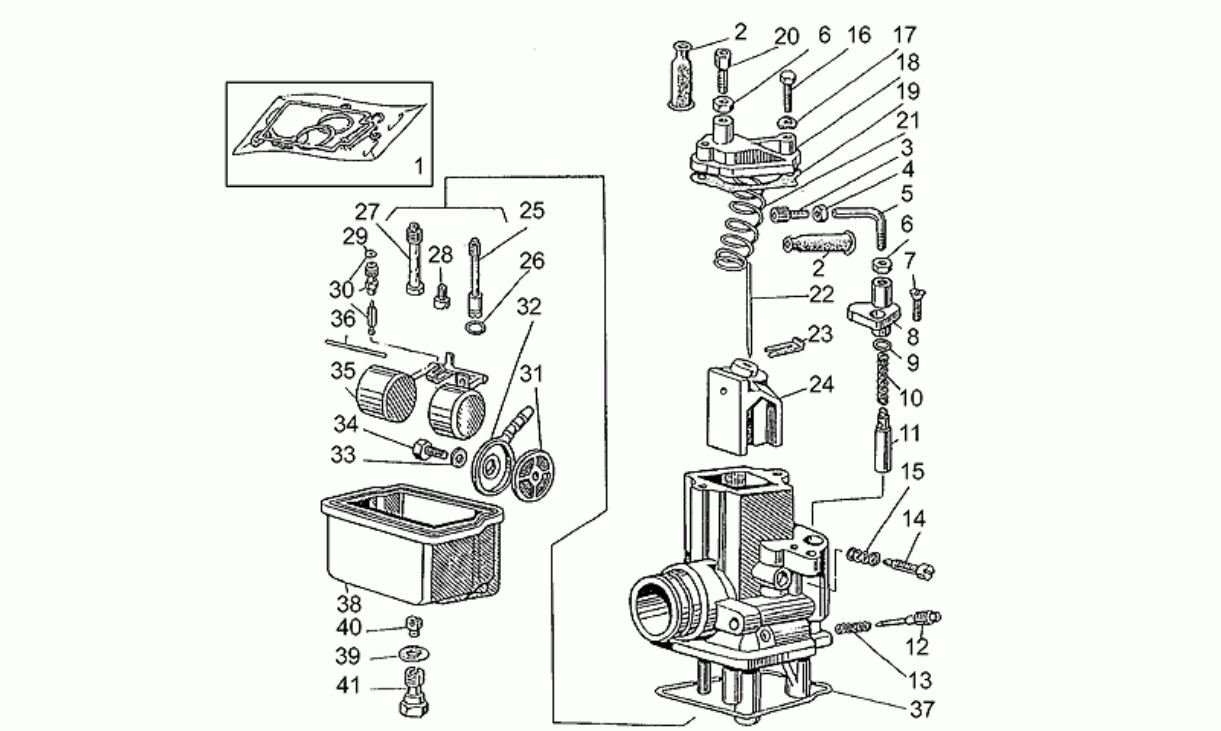

Pos.	Code	Description	Q.ty	Variants
1	GU39939900	Sachet joints	2	
2	0000000	Pneu s. chambre 110/90"	4	
3	GU53937200	Vis tendeur de fil	2	
4	GU19938880	Ecrou	2	
5	GU49938900	Tuyau	2	
6	GU12937300	Ecrou	4	
7	GU13937900	Vis	2	
8	GU17937450	Couvercle dispositif dém.	2	
9	0000000	Pneu s. chambre 110/90"	2	
10	GU39937600	Ressort de soupape	2	
11	GU13937800	Soupape de démarrage	2	
12	GU13936200	Vis réglage minimum	2	
13	GU13936300	Ressort	2	
14	GU13936600	Vis réglage soupape gaz	2	
15	GU13936700	Ressort	2	
16	GU13932800	Vis	4	
17	GU13932900	Rondelle	4	
18	GU53935000	Couvercle soupape	2	
19	0000000	Pneu s. chambre 110/90"	2	
20	GU12937200	Vis tendeur de fil	2	
21	GU53937100	Ressort rappel soup.gaz	2	
22	GU19937715	Pointeau conique E25/2a	2	
23	GU55938585	Agrafe pointeau conique	2	
24	GU61934800	Soupape gaz 40	2	
25	GU25936000	Jet démarrage	2	
26	0000000	Pneu s. chambre 110/90"	2	
27	GU19935500	Gicleur 260AH	2	
28	GU27935960	Gicleur minimum 38	2	

Assembly	MOTEUR
Code	34.27
Description	Carburateurs
Revision	1

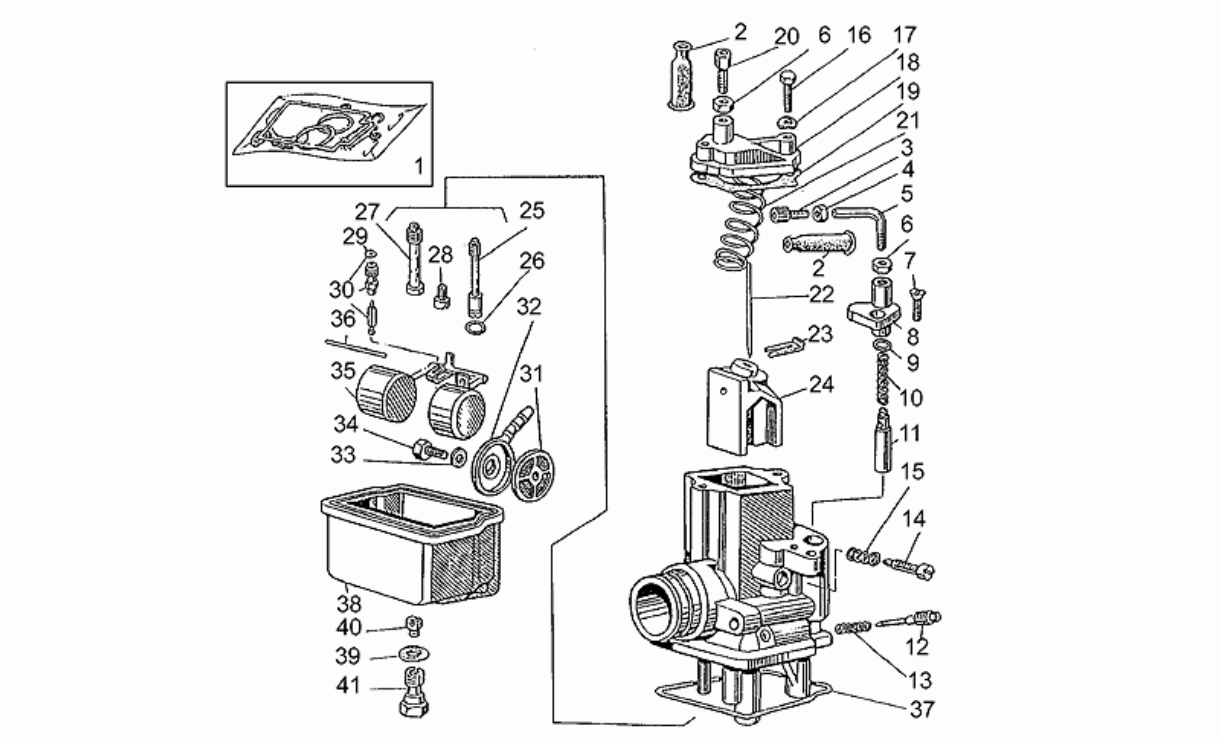

Pos.	Code	Description	Q.ty	Variants
29	0000000	Pneu s. chambre 110/90"	2	
30	GU19934960	Pointeau conique 8	2	
31	GU73934000	Filtre essence	2	
32	GU13934600	Pipette racc. tuyau essence	2	
33	0000000	Pneu s. chambre 110/90"	2	
34	GU10934900	Vis fix.pipette	2	
35	GU61934300	Flotteur	2	
36	GU13933100	Axe flotteur	2	
37	0000000	Pneu s. chambre 110/90"	2	
38	GU10934400	Cuve	2	
39	0000000	Pneu s. chambre 110/90"	2	
40	GU39935701	Jet maximum 98	2	
41	GU13933700	Bouchon	2	

Assembly	MOTEUR
Code	34.28
Description	Carter moteur
Revision	1

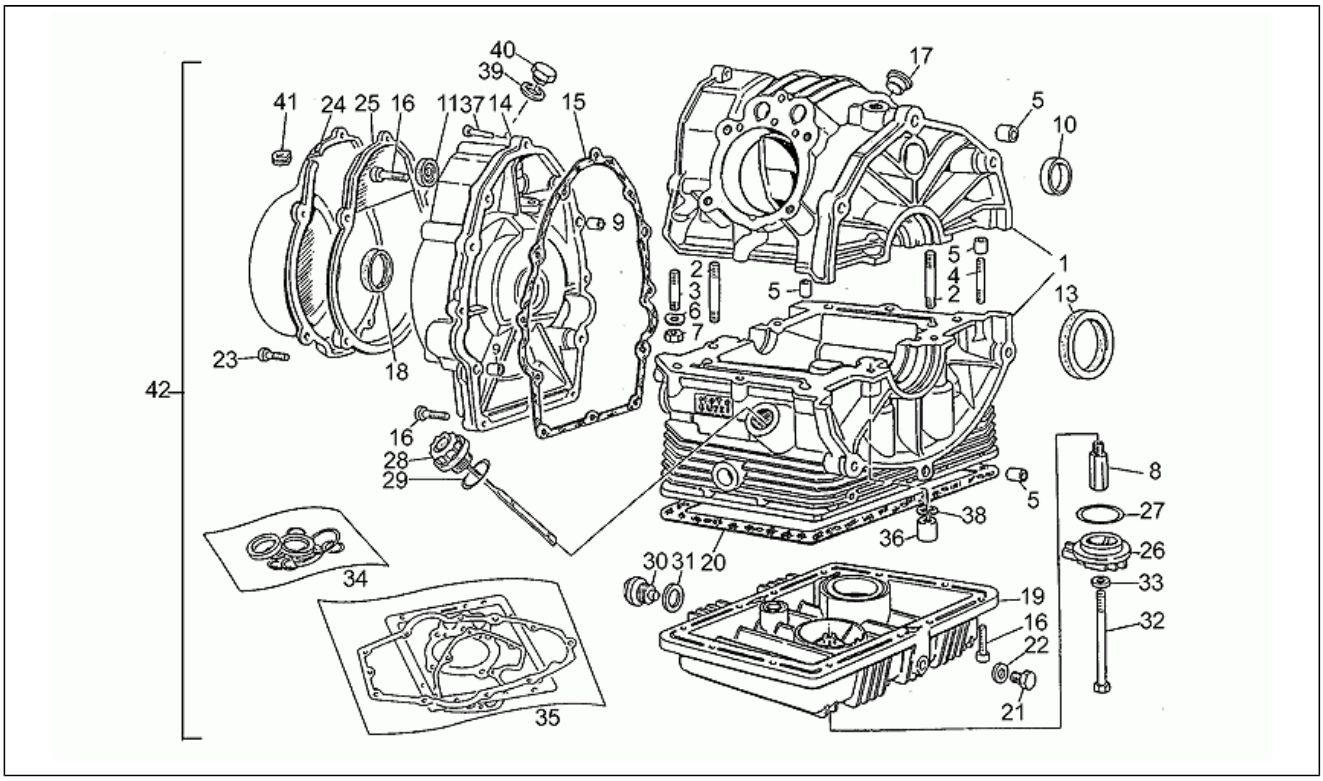

Pos.	Code	Description	Q.ty	Variants
1	GU19000120	Carter moteur brut	1	
2	GU96451560	Vis sans tête	4	
3	GU96451430	Vis sans tête	4	
4	GU96508055	Vis sans tête	2	
5	GU19015020	Bague	4	
6	GU61270300	Rondelle élastique 8x15x0,3	6	
7	GU92602208	Ecrou M8X1,25	6	
8	GU19003800	Raccord	1	
9	GU19002020	Bague 6,6x9x13	2	
10	GU19016320	Bouchon	1	
11	GU90401530	Bague d'étanchéité	1	
13	GU90405367	Bague d'étanchéité	1	
14	GU19001420	Couvercle distribution brut	1	
15	GU19001200	Joint	1	
16	GU98622325	Vis M6X25	22	
17	GU19017120	Bouchon	1	
18	GU90402840	Bague d'étanchéité 28x38x7	1	
19	GU27003585	Carter huile moteur brut	1	
20	GU19003602	Joint	1	
21	GU95980214	Bouchon niveau huile	1	
22	GU10528900	Garniture	1	
23	GU98620335	Vis M6X35	5	
24	GU27001636	Couvercle	1	
25	GU27001136	Bride	1	
26	GU19003400	Couvercle brut	1	
27	GU90706444	Joint torique	1	
28	GU27004985	Bouchon rempl. huile	1	
29	GU90706282	Bague d'étanchéité	1	

Assembly	MOTEUR
Code	34.28
Description	Carter moteur
Revision	1

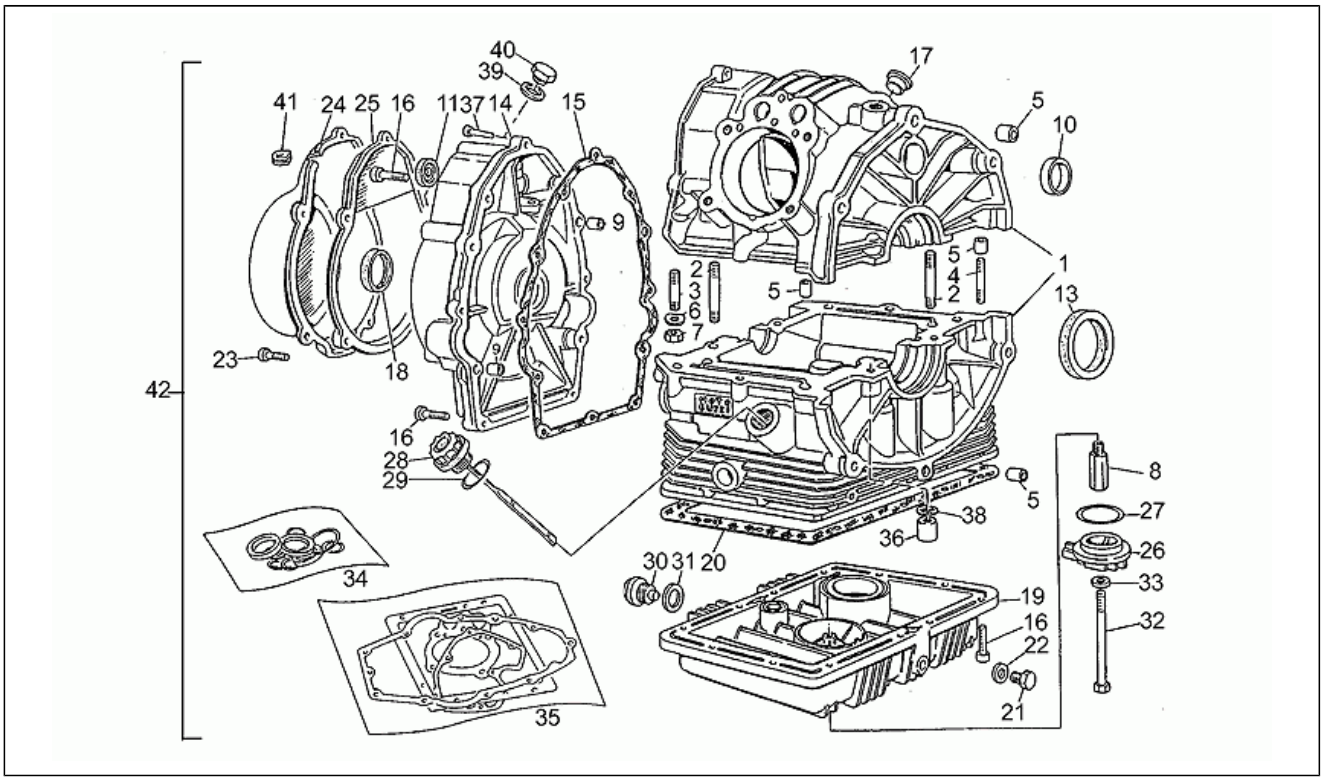

Pos.	Code	Description	Q.ty	Variants
30	GU12003702	Bouchon vid.huile	1	
31	GU95100709	Joint 20,1x28x2	1	
32	GU27152885	Boulon	1	
33	GU12154200	Joint 8,25x15x1	1	
34	GU19999580	Joint spy-série	1	
35	GU19999020	Joints moteur-série	1	
36	GU13021900	Ecrou colonne	4	
37	GU98620330	Vis M6X30	2	
38	GU95129180	Rondelle 10,5X18X0,8	4	
39	GU10154200	Joint	1	
40	GU95980119	Bouchon	1	
41	GU19007700	Caoutchouc	1	
42	GU27991035	Moteur sans boîte vit. brut	1	

PIAGGIO&C.s.p.a.

Assembly	MOTEUR
Code	34.29
Description	Tête cylindre
Revision	1

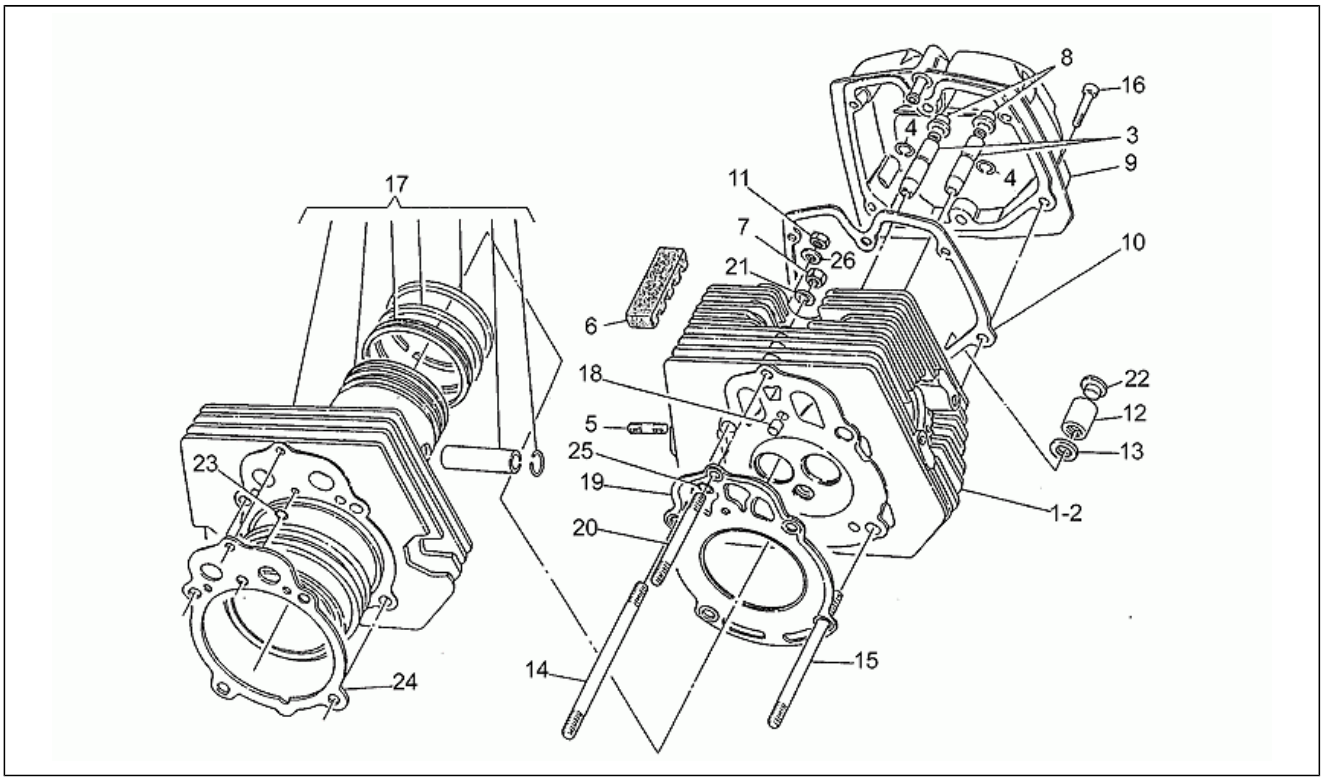

Pos.	Code	Description	Q.ty	Variants
1	GU19022120	Culasse d.	1	
2	GU19022220	Culasse g.	1	
3	GU61036801	Guide soupape	4	
4	GU90353009	Anneau élastique	4	
5	GU96506042	Vis sans tête	4	
6	GU19025300	Plaquette antivibratile	4	
7	GU19021920	Ecrou	2	
8	GU19037820	Joint spi	4	
9	GU19023520	Couvercle soupapes	2	
10	GU19023700	Joint	2	
11	GU92603010	Ecrou M10X1,5	4	
12	GU13021900	Ecrou colonne	4	
13	GU95129180	Rondelle 10,5X18X0,8	4	
14	GU96510182	Vis sans tête	4	
15	GU96510125	Vis sans tête 125 mm	4	
16	GU98622325	Vis M6X25	12	
17	GU19060121	Cylindre av.piston	2	
18	GU19021320	Bague	2	
19	GU27022020	Joint tête	2	
20	GU96508107	Vis sans tête	2	
21	GU61270300	Rondelle élastique 8x15x0,3	2	
22	GU93180245	Bouchon	4	
23	GU61027200	Joint torique	2	
24	GU27020820	Joint	2	
25	GU90706076	Joint torique	2	
26	GU19032980	Cale	4	

Assembly	MOTEUR
Code	34.30
Description	Distribution
Revision	1

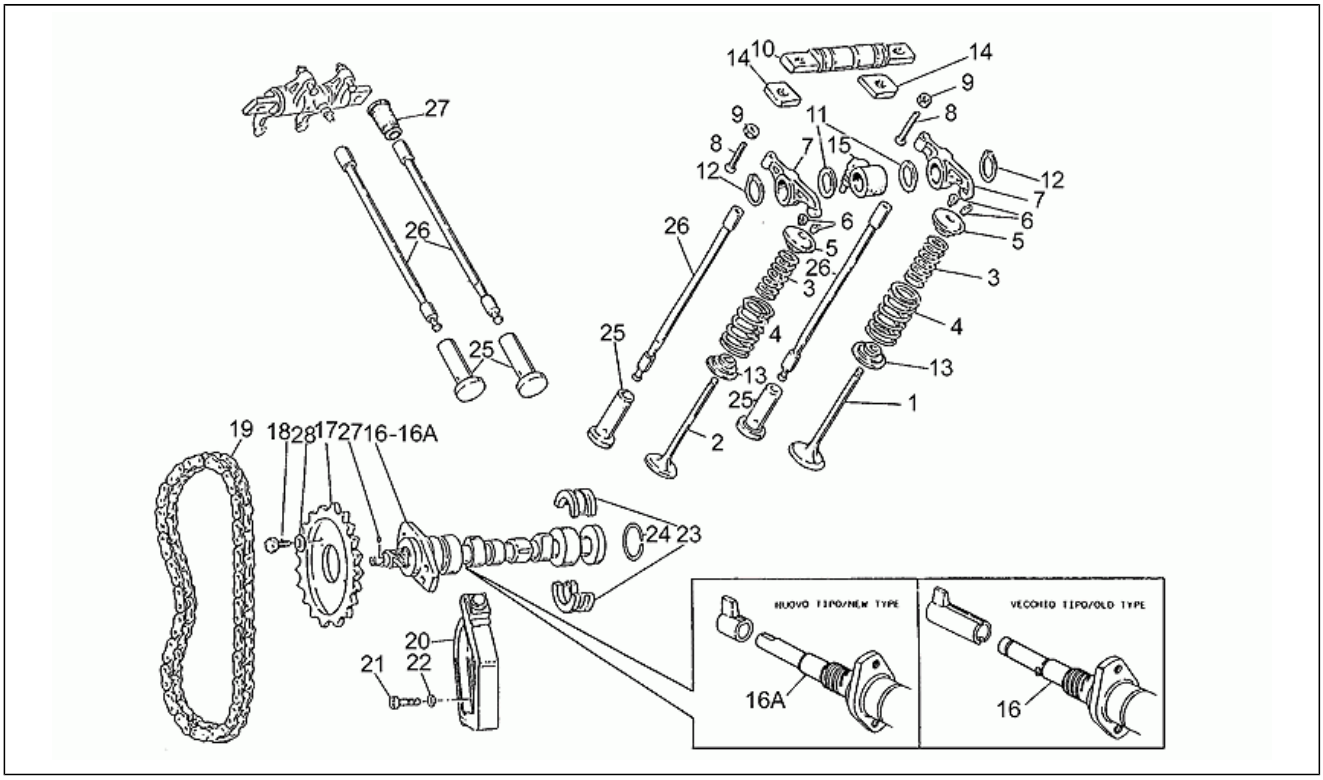

Pos.	Code	Description	Q.ty	Variants
1	GU19036021	Soupape d'admission	2	
2	GU23026100	Soupape d'échappement	2	
3	GU61037600	Ressort	4	
4	GU61037500	Ressort	4	
5	GU61038000	Coupelle supérieur	4	
6	GU61038100	Demi-clavette	8	
7	GU19030500	Culbuteur	4	
8	GU19034000	Vis	4	
9	GU92602406	Ecrou M6x1	4	
10	GU19032000	Axe culbuteur	2	
11	GU19032300	Rondelle d'appui	4	
12	GU90271018	Bague seeger	4	
13	GU61037000	Coupelle inférieure	4	
14	GU19032980	Cale	4	
15	GU19027500	Manchon	2	
16	GU27053362	Arbre à cames	1	**Spécifications techniques:**Jusq'au moteur PC51197[M1]
16	GU27053463	Arbre à cames	1	**Spécifications techniques:**A' partir du moteur PC51198[M2]
17	GU19054521	Engrenage distribution	1	
18	GU61054900	Boulon	2	
19	GU19058021	Chaîne de distribution	1	
20	GU19058220	Tendeur de chaine	1	
21	GU98822316	Vis	1	
22	GU95129115	Rondelle	1	
23	GU19055700	Secteur	2	
24	GU90353029	Anneau élastique	1	
25	GU19045861	Poussoir	4	
26	GU19045020	Culbuteur tige	4	

Assembly	MOTEUR
Code	34.30
Description	Distribution
Revision	1

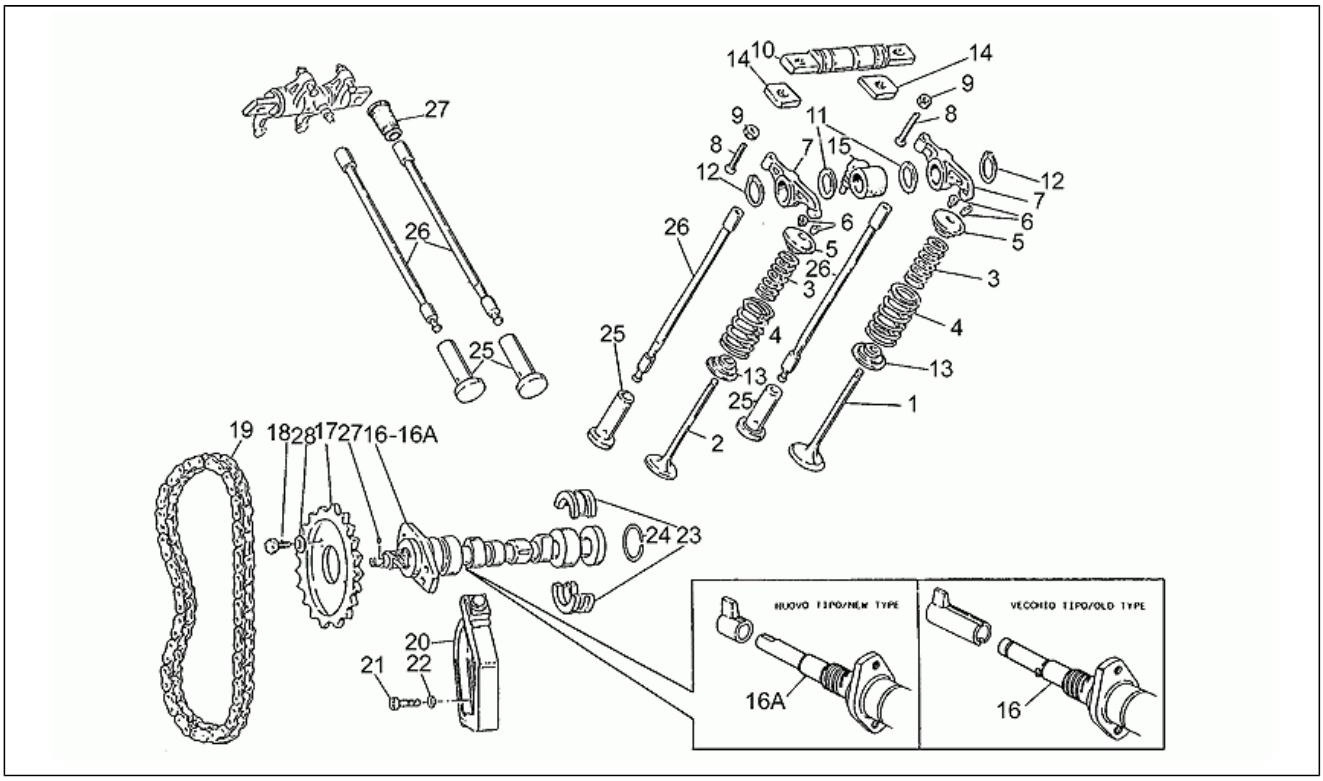

Pos.	Code	Description	Q.ty	Variants
27	GU27045420	Capuchon	4	
28	GU23217800	Rondelle de séreté	2	

Assembly	MOTEUR
Code	34.31
Description	Embrayage
Revision	1

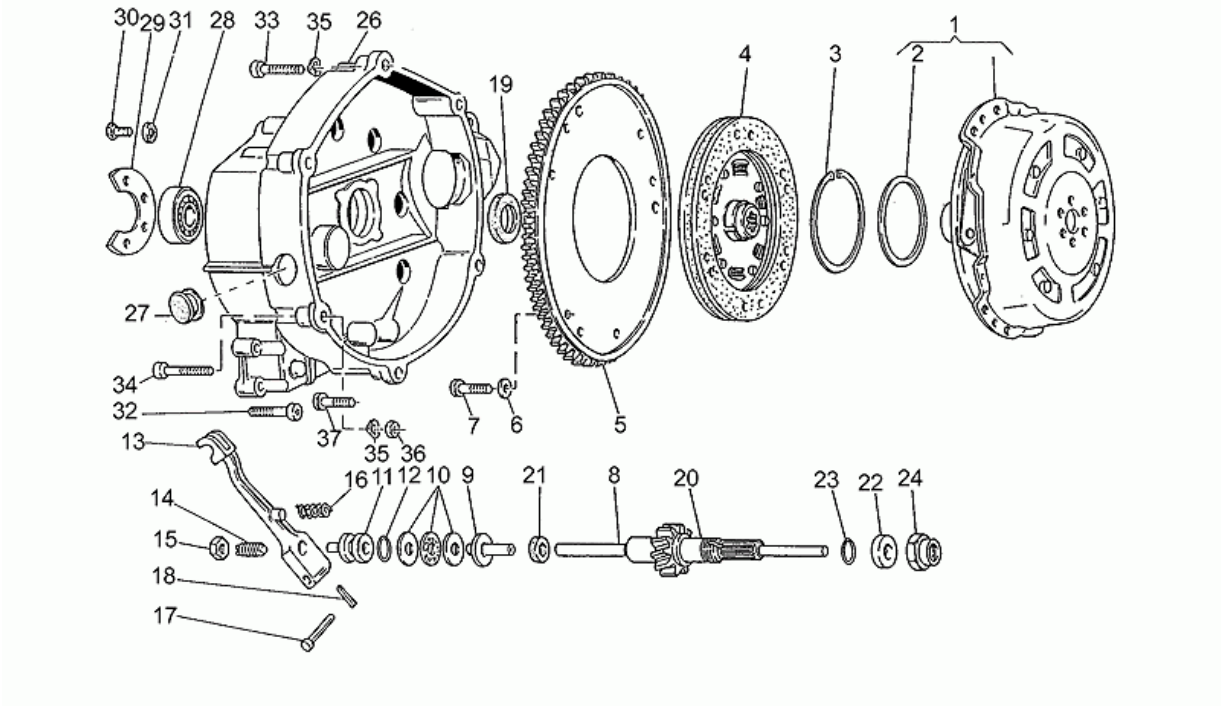

Pos.	Code	Description	Q.ty	Variants
1	GU19080161	Commande embrayage	1	
2	GU19083462	Cuvette	1	
3	GU90272075	Anneau élastique	1	
4	GU27084420	Disque embrayage mené	1	
5	GU19067900	Couronne MOTOPLAT	1	
6	GU14217901	Rondelle 6,4x10x0,7	6	
7	GU98054316	Vis M6X16	6	
8	GU20085720	Tige	1	
9	GU14086000	Corps intérieur	1	
10	GU12087001	Palier poussée	1	
11	GU14086100	Corps extérieur	1	
12	GU90706170	Joint torique 17,13x2,62	1	
13	GU14090201	Débrayage	1	
14	GU14090400	Vis embrayage	1	
15	GU92602508	Ecrou M8X1	1	
16	GU94321105	Retour levier démarrage	1	
17	GU95780271	Goupille 7x39	1	
18	GU95500222	Goupille	1	
19	GU90402841	Bague d'étanchéité 28x40x7	1	
20	GU27210710	Bague d'étanchéité	1	
21	GU90400616	Bague d'étanchéité 6x16x7	1	
22	GU19213720	Entretoise	1	
23	GU90706188	Bague d'étanchéité 18,77X1,78	1	
24	GU19356700	Ecrou	1	
26	GU19200422	Cloche embrayage	1	
27	GU93180220	Bouchon	1	
28	GU90201220	Roulement	1	
29	GU19203420	Plaque fixation palier	1	

Assembly	MOTEUR
Code	34.31
Description	Embrayage
Revision	1

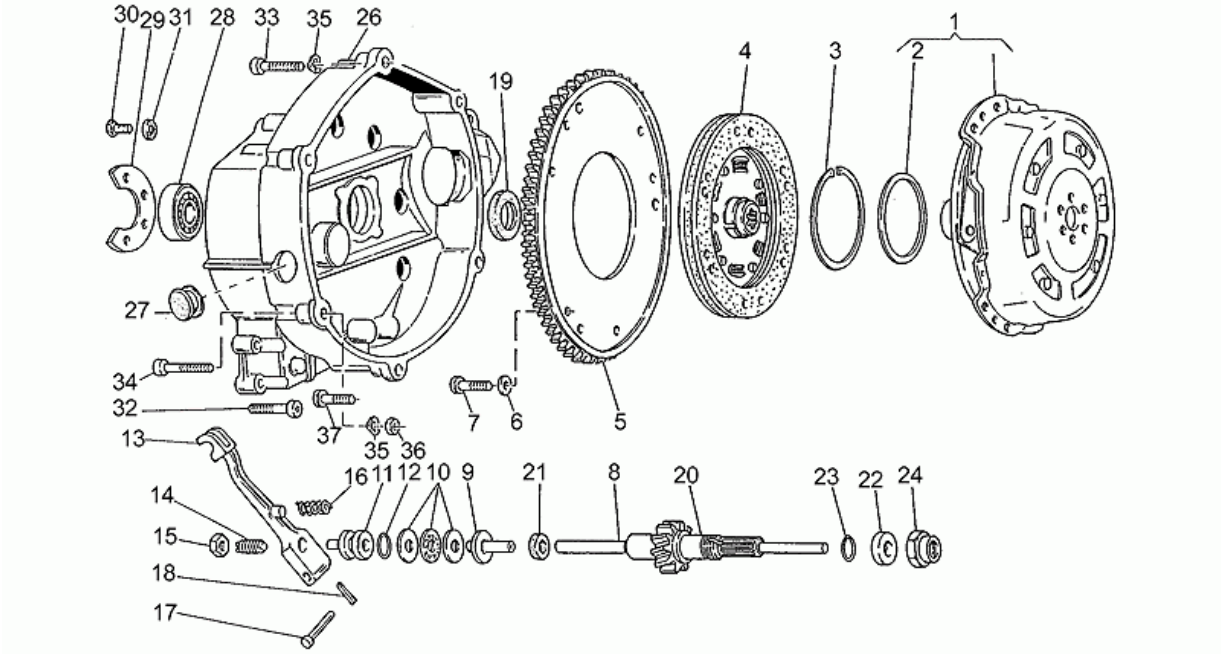

Pos.	Code	Description	Q.ty	Variants
30	GU98054314	Vis	3	
31	GU14217901	Rondelle 6,4x10x0,7	3	
32	GU98620330	Vis M6X30	11	
33	GU98620435	Vis M8X35	3	
34	GU98620450	Vis	1	
35	GU61270300	Rondelle élastique 8x15x0,3	6	
36	GU92602208	Ecrou M8X1,25	1	
37	GU98620440	Vis M8X40	2	

PIAGGIO&C.s.p.a.

Assembly	MOTEUR
Code	34.33
Description	Pompe huile-filtre
Revision	1

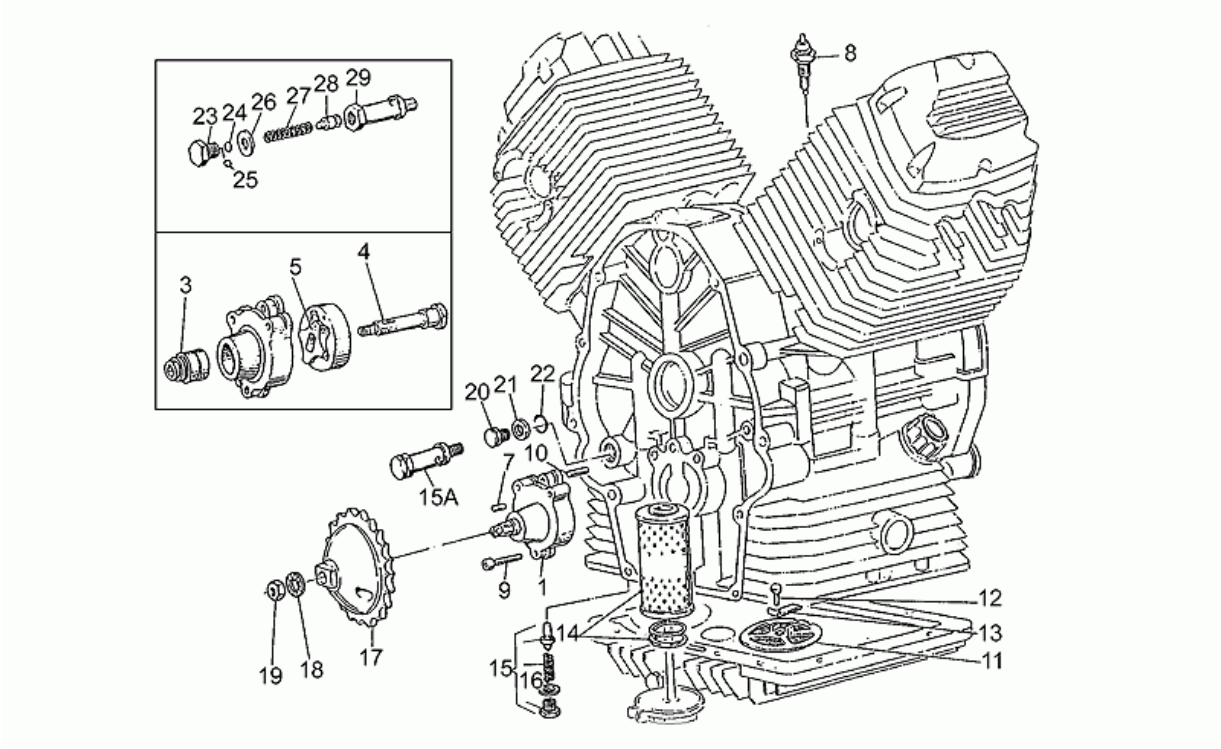

Pos.	Code	Description	Q.ty	Variants
1	GU19146420	Pompe huile	1	
3	GU92252210	Roulement à rouleaux 10x22x20	1	
4	GU19147820	Arbre pompe huile	1	
5	GU19148420	Rotor intérieur	1	
7	GU92296726	Rouleau guide	1	
8	GU31999581	Détecteur pression	1	**Spécifications techniques:**See spare parts comm.n.022 of 2001[02201N]
9	GU98620335	Vis M6X35	3	
10	GU19018920	Goupille	2	
11	GU19152200	Filtre à huile	1	
12	GU98054314	Vis	1	
13	GU95187006	Plaquette	1	
14	GU27153085	Filtre à huile	1	
15	GU10158201	Soupape huile complète	1	**Spécifications techniques:**First type[1T]
15	GU31158250	Oil pressure valve	1	**Spécifications techniques:**Second type[2T]
16	GU18144350	Rondelle 18,25x24x1	3	
17	GU19147721	Engrenage pompe huile	1	
18	GU19149800	Rondelle 10,5x16x1	1	
19	GU92602510	Ecrou M10x1,25	1	
20	GU31016065	Bouchon	1	
21	GU18161150	Garniture 14,25	1	
22	GU90706111	Joint torique	1	
23	GU12159000	Bouchon	1	**Spécifications techniques:**First type[1T]
24	GU12150700	Fond	1	**Spécifications techniques:**First type[1T]
25	GU92295911	Bille	1	**Spécifications techniques:**First type[1T]
26	GU95100523	Rondelle 14,5X20X1	2	**Spécifications techniques:**First type[1T]
27	GU94321072	Ressort de soupape	1	**Spécifications techniques:**First type[1T]
28	GU12150900	Piston	1	**Spécifications techniques:**First type[1T]

Assembly	MOTEUR
Code	34.33
Description	Pompe huile-filtre
Revision	1

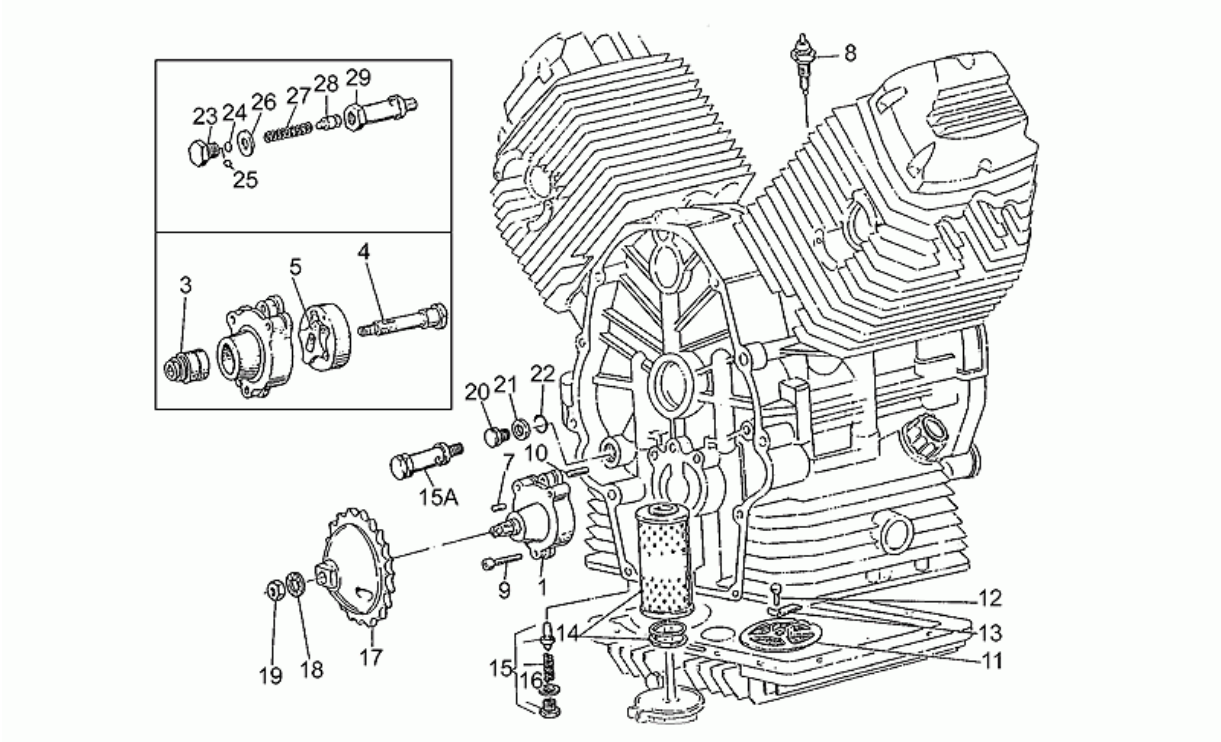

Pos.	Code	Description	Q.ty	Variants
29	GU10158701	Corps de soupape	1	**Spécifications techniques:**First type[1T]

Assembly	MOTEUR
Code	34.34
Description	Carter de boîte vitesses
Revision	1

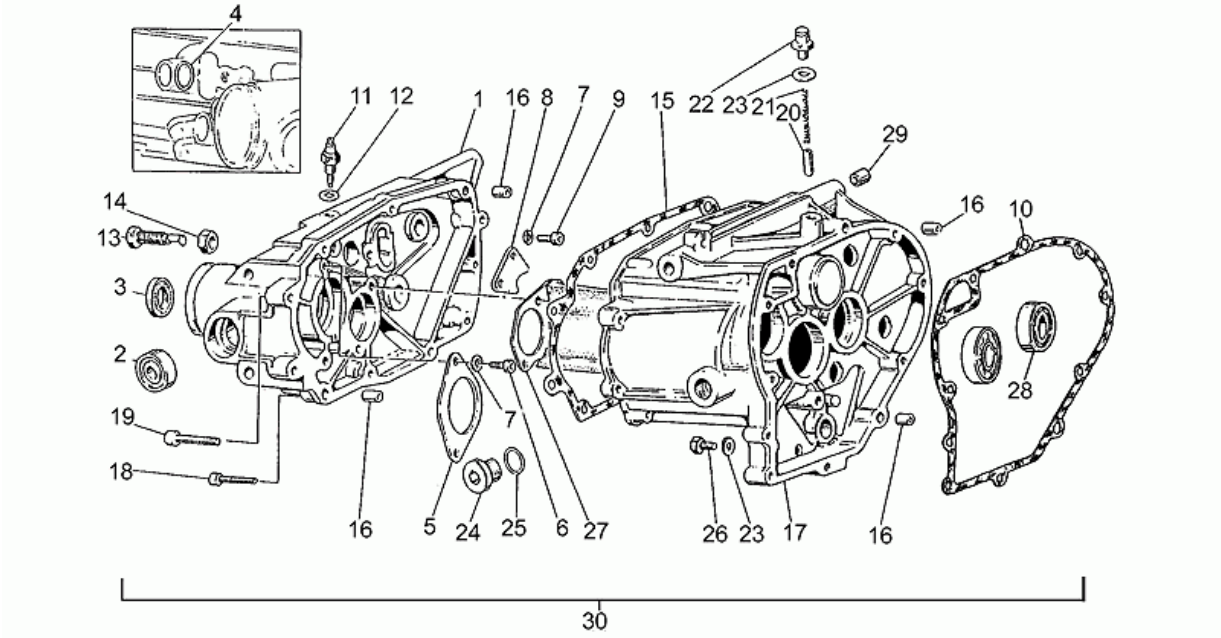

Pos.	Code	Description	Q.ty	Variants
1	GU19200821	Couvercle boîte	1	
2	GU92204215	Roulement 15x35x11	2	
3	GU90402841	Bague d'étanchéité 28x40x7	1	
4	GU90706140	Joint torique 13,95x2,92	1	
5	GU19213820	Plaque	1	
6	GU98622314	Vis	4	
7	GU14217901	Rondelle 6,4x10x0,7	6	
8	GU19235800	Plaque	1	
9	GU98622314	Vis	2	
10	GU23200370	Joint	1	
11	GU19207220	Capteur	1	
12	GU12154200	Joint 8,25x15x1	1	
13	GU19237800	Vis M12x1,25	1	
14	GU92602512	Ecrou bas M12x1,25	1	
15	GU19201120	Joint	1	
16	GU19002020	Bague 6,6x9x13	4	
17	GU19200222	Carter de boîte vitesses	1	
18	GU98620330	Vis M6X30	7	
19	GU98620435	Vis M8X35	4	
20	GU55234700	Encliquetage	1	
21	GU94321067	Retour levier démarrage	1	
22	GU19206501	Bouchon purge	1	
23	GU10528900	Garniture	2	
24	GU12022600	Bouchon huile	1	
25	GU90706203	Joint torique 20,24X2,62	1	
26	GU95980214	Bouchon niveau huile	1	
27	GU19208220	Huile cloison	1	
28	GU92201120	Roulement à billes 20x42x12	1	

Assembly	MOTEUR
Code	34.34
Description	Carter de boîte vitesses
Revision	1

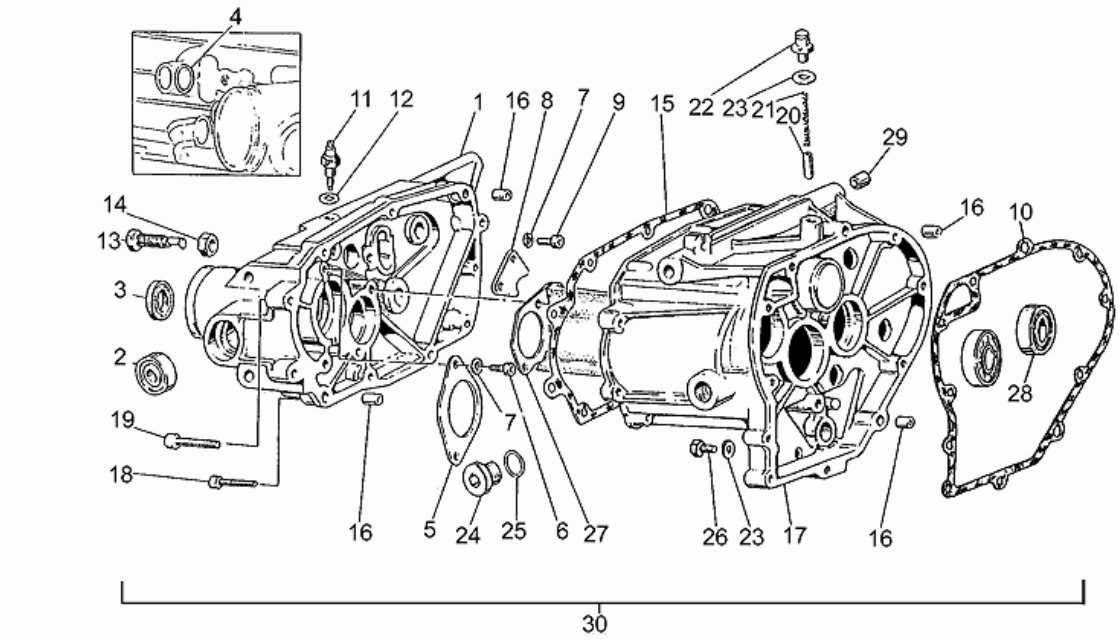

Pos.	Code	Description	Q.ty	Variants
29	GU19202320	Bague 10,25x15,7x8	2	
30	GU27991535	Boîte de vites.compl.et carter	1	

Tables

Table	Description
01	BATTERIE
02	SIDE CASES
03	CARROSSERIE AV. - COUPOLE
04	CARROSSERIE
05	COUPLE CONIQUE
06	TABLEAU DE BORD
07	PHARE AVANT-KLAXON
08	FEU ARRIÈRE
09	FILTRE AIR
10	FOURCHE
11	FOURCHE ARRIERE
12	CIRCUIT ELECTRIQUE
13	LAMPE STROBOSCOPIQUE I
14	LAMPE STROBOSCOPIQUE II
15	APPELS
16	GUIDON
17	GARDE-BOUE - ACCESS.
18	R.PIEDS - BÉQUILLES
19	SYS.FREIN AVANT/ARRIÈRE
20	SYS.FREIN AVANT D.
21	MAÎT.CYL. FREIN AR
22	ROUE AV.
23	ROUE ARRIÈRE
24	SIRÈNES
25	SUSPENSION AVANT/ARRIERE
26	CHASSIS
27	ALLUMAGE
28	ARBRE MOTEUR CPL.
29	ALIMENTATION
30	BOÎTE DE VITESSES
31	CARBURATEUR I
32	CARBURATEUR II
33	CARTER
34	DISTRIBUTION
35	EMBRAYAGE
36	GROUPE ECHAPPEMENT
37	DÉMARREUR
38	POMPE HUILE
39	CARTER DE BOÎTE VITESSES
40	CULASSE - CYLINDRE - PISTON



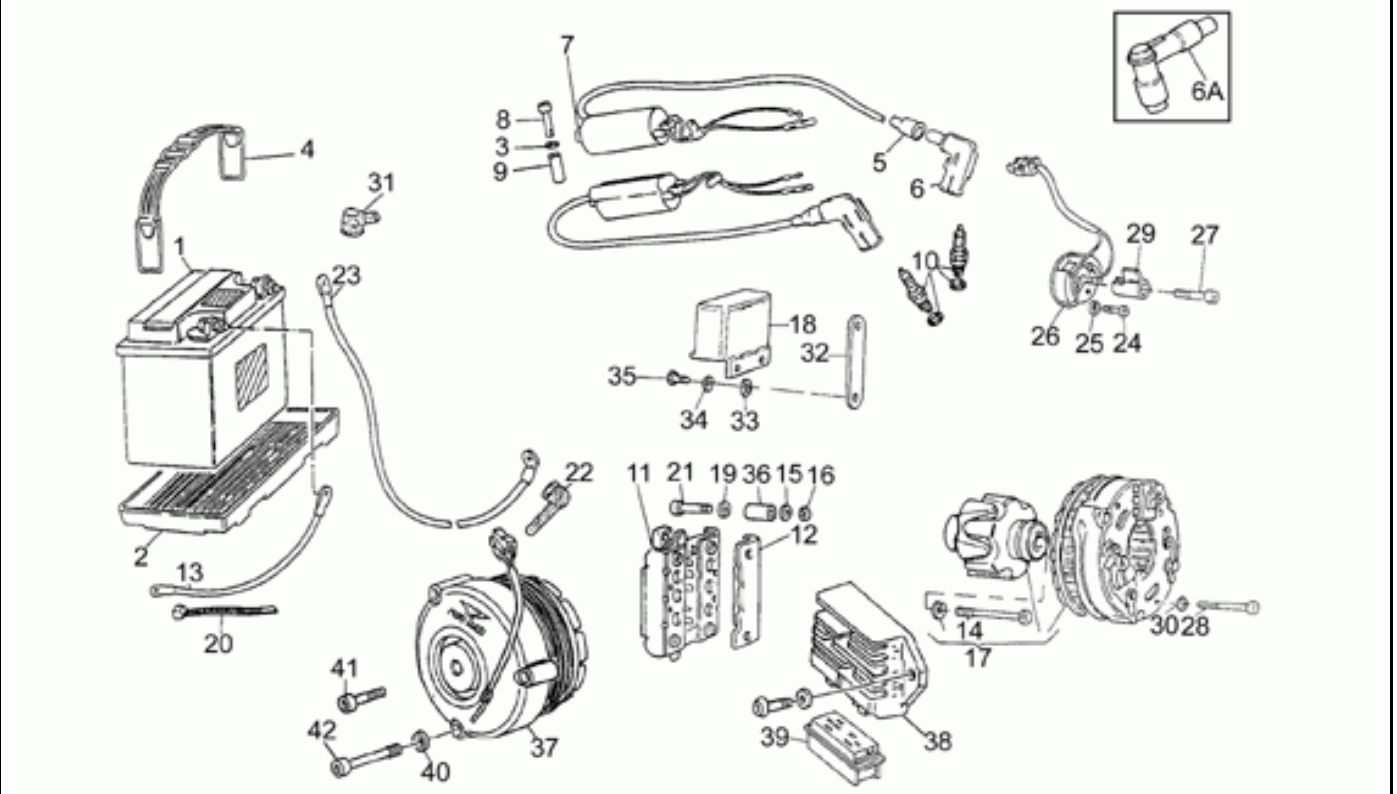

Ref.	Description	Year	I.M.	Country	Version	Code	Qty
1	Batterie 12V-32AH	-	-	-	-	14704505	1
2	Cuve	-	-	-	-	14707000	1
3	Rondelle	-	-	-	-	95004205	4
4	Bride	-	-	-	-	19704800	1
5	Capuchon	-	-	-	-	14717600	2
6	Pipe bougie	-	-	-	-	14717400	2
	Pipe bougie NGK	-	-	-	-	30717410	2
7	Bobine HT	-	-	-	-	31716560	2
8	Vis	-	-	-	-	98620240	4
9	Entretoise	-	-	-	-	91180721	4
10	Bougie NGK B8ES	-	-	-	-	31717060	2
11	Redresseur Bosch	-	-	-	-	17704300	1
12	Couvercle	-	-	-	-	14704205	1
13	Câblage masse-batterie	-	-	-	-	19748400	1
14	Vis	-	-	-	-	14712459	1
15	Rondelle évent.	-	-	-	-	95021105	4
16	Ecrou	-	-	-	-	92602205	4
17	Alternateur Bosch	-	-	-	-	17712400	1
18	Régulateur de tension Bosch	-	-	-	-	29703800	1
19	Rondelle	-	-	-	-	95100060	10
20	Collier	-	-	-	-	14609650	20
21	Vis	-	-	-	-	98052245	4
22	Capuchon	-	-	-	-	19707100	2
23	Cablage	-	-	-	-	19748000	1
24	Vis	-	-	-	-	98290512	2
25	Rondelle	-	-	-	-	95000205	2
26	Capteur phase/tours	-	-	-	-	29722270	1
27	Vis M6X18	-	-	-	-	98622318	1
28	Vis M5X45	-	-	-	-	98620245	3
29	Rotor	-	-	-	-	27721063	1
30	Rondelle évent.	-	-	-	-	95021105	3
31	Capuchon	-	-	-	-	23707100	1
32	Plaque support	-	-	-	-	29743602	2
33	Entretoise	-	-	-	-	91180605	2
34	Rondelle élastique 5,3X10X0,5	-	-	-	-	95129100	4
35	Vis	-	-	-	-	98054214	4
36	Entretoise	-	-	-	-	91180627	4
37	Alternateur SAPRISA	-	-	-	-	28712400	1
38	Régulateur de tension SAPRISA	-	-	-	-	28703800	1
39	Connecteur SAPRISA	-	-	-	-	28712500	1
40	Rondelle évent.	-	-	-	-	95021105	3
41	Vis	-	-	-	-	98620250	1
42	Vis	-	-	-	-	28712459	3

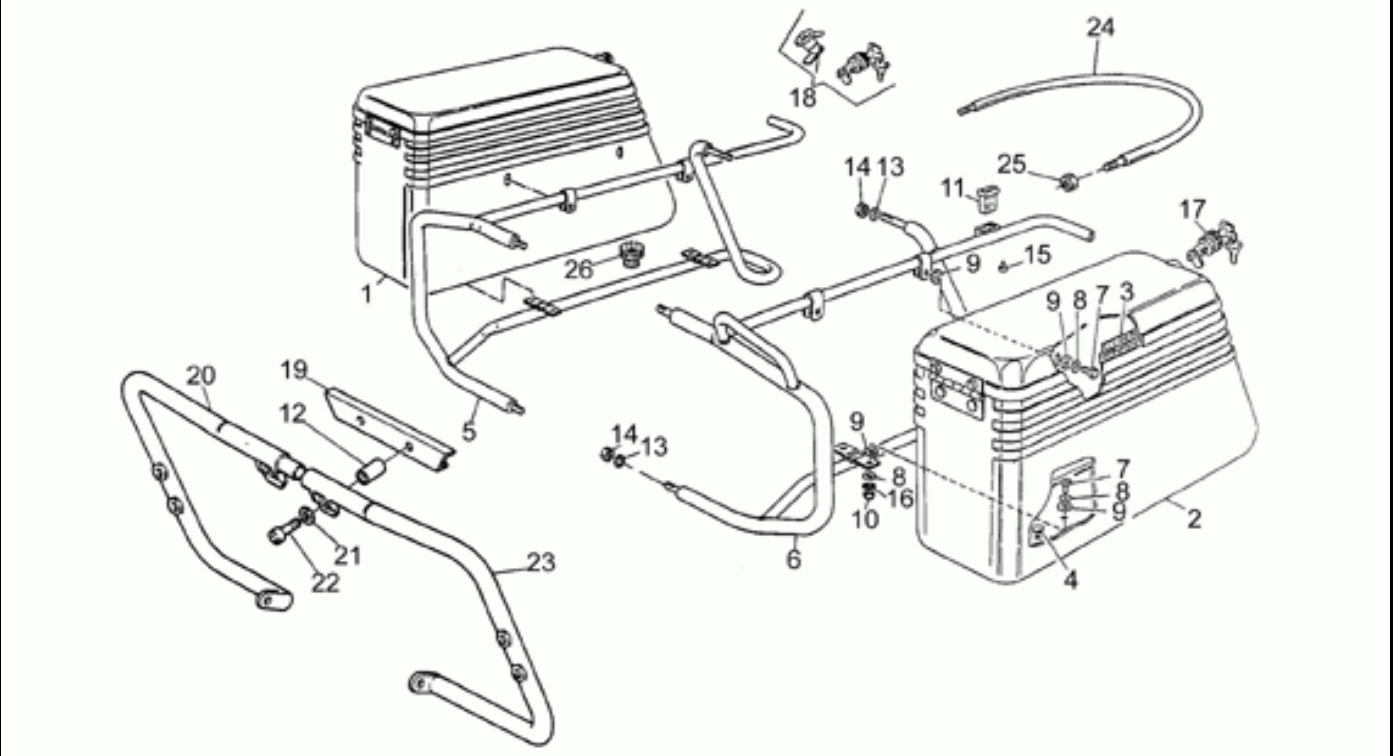

Ref.	Description	Year	I.M.	Country	Version	Code	Qty
1	Sacoche d. cpl.blanche/bleue	-	-	-	B/RB	23482590004	1
	Sacoche d. cpl.bleue C.	-	-	-	Blue	28482580	1
	Sacoche d. cpl.blanche	-	-	-	W	23482590	1
	Sacoche d. cpl.blanche/noire	-	-	-	W/B	23482590003	1
2	Sacoche g. cpl.blanche/bleue	-	-	-	B/RB	23485790004	1
	Sacoche g. cpl.bleue C.	-	-	-	Blue	28485780	1
	Sacoche g. cpl.blanche	-	-	-	W	23485790	1
	Sacoche g. cpl.blanche/noire	-	-	-	W/B	23485790003	1
3	Joint couvercle	-	-	-	-	28483946	2
4	Tampon	-	-	-	-	19705900	8
5	Support droite	-	-	-	-	28485045	1
6	Support gauche	-	-	-	-	28486545	1
7	Vis M6X20	-	-	-	-	98054320	12
8	Rondelle 6,5x20x2	-	-	-	-	95100141	16
9	Caoutchouc	-	-	-	-	93110060	24
10	Ecrou	-	-	-	-	92602206	8
11	Caoutchouc	-	-	-	-	28584845	2
12	Entretoise	-	-	-	-	31436415	2
13	Rondelle élastique	-	-	-	-	95021108	6
14	Ecrou	-	-	-	-	92602208	6
15	Caoutchouc	-	-	-	-	93180706	1
16	Rondelle évent.	-	-	-	-	95021106	8
17	Serrure	-	-	-	-	28489945	2
18	Kit serrure BOSCH	-	-	-	-	23736891	1
19	Plaque fixation	-	-	-	-	19451525	1
20	Pare-chocs AV d.	-	-	-	-	19450325	1
21	Rondelle	-	-	-	-	95020108	2
22	Vis	-	-	-	-	98610440	2
23	Pare-chocs AV g.	-	-	-	-	19450425	1
24	Traverse raccordement sacoches	-	-	-	-	28486880	1
25	Ecrou	-	-	-	-	92630508	2
26	Caoutchouc pass.câble	-	-	-	-	28751944	1

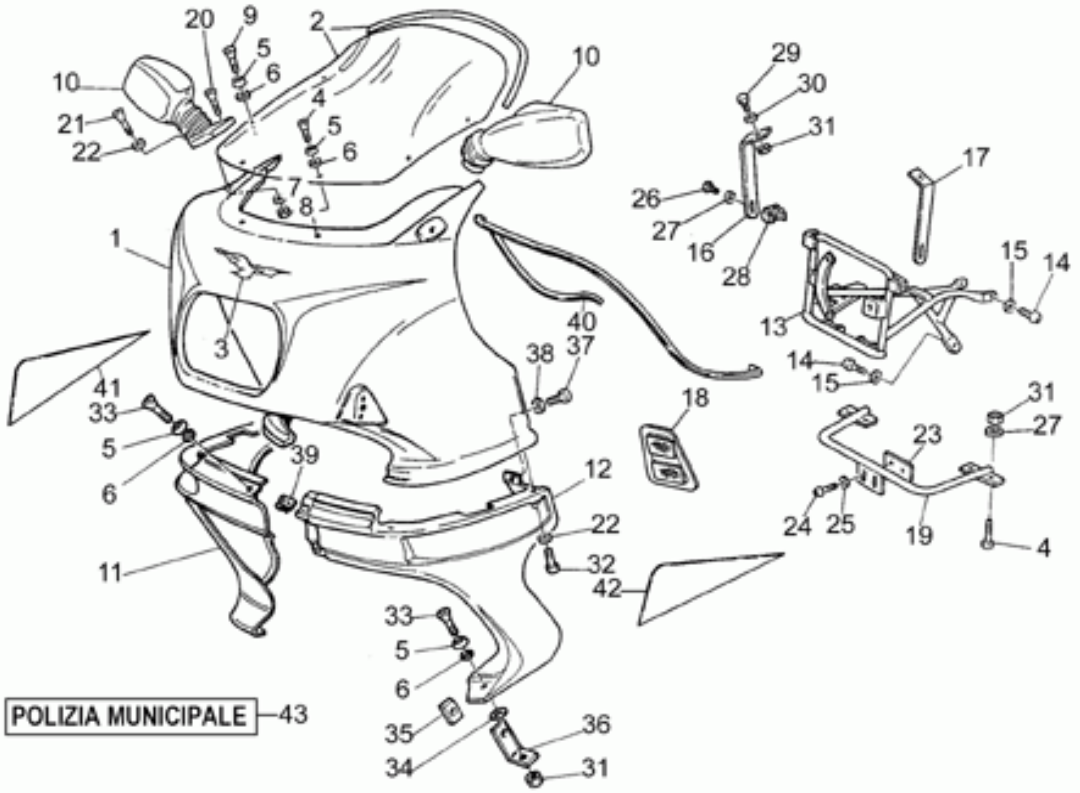

Ref.	Description	Year	I.M.	Country	Version	Code	Qty
1	Carène sup.	-	-	-	Blue	19575415	1
	Carène sup.brute	-	-	-	gr	315754401	1
	Carène sup.blanche	-	-	-	W	19575430	1
2	Pare-brise	-	-	-	-	31577240	1
3	Décalco	-	-	-	-	27917520	1
4	Vis	-	-	-	-	98250625	2
5	Rondelle	-	-	-	-	18577850	10
6	Joint torique	-	-	-	-	45212400	10
	Rondelle	-	-	-	-	95001206	4
8	Ecrou	-	-	-	-	92630207	4
9	Vis	-	-	-	-	98250630	4
10	Miroir rétroviseur	-	-	-	-	28769847	2
11	Protection jambes d. blanche	-	-	-	-	19570330	1
	Protection jambes d. bleue	-	-	-	-	19570316	1
	Protection jambes d. brute	-	-	-	-	195703161	1
12	Protection jambes g. blanche	-	-	-	-	19570430	1
	Protection jambes g. bleue	-	-	-	-	19570416	1
	Protection jambes g. brute	-	-	-	-	195704161	1
13	Plaque support	-	-	-	-	31578640	1
14	Vis	-	-	-	-	98822414	3
15	Rondelle élastique	-	-	-	-	95021108	3
16	Soutien d.	-	-	-	-	31573540	1
17	Soutien g.	-	-	-	-	31573640	1
18	Protection genoux	-	-	-	-	19941715	2
19	Support carène	-	-	-	-	31570840	1
20	Vis	-	-	-	-	98202516	2
21	Vis	-	-	-	-	98202520	2
22	Rondelle	-	-	-	-	95007205	8
23	Plaquette	-	-	-	-	17451750	1
24	Vis M8X20	-	-	-	-	98054420	2
25	Rondelle	-	-	-	-	95004208	2
26	Vis	-	-	-	-	98054220	2
27	Rondelle 6,15x11x0,8	-	-	-	-	95004206	4
28	Ecrou en cage	-	-	-	-	92660601	2
29	Vis M6X20	-	-	-	-	98054320	2
30	Rondelle	-	-	-	-	95100120	2
31	Ecrou M6x1	-	-	-	-	92630106	6
32	Vis	-	-	-	-	98610225	4
33	Vis	-	-	-	-	98250618	4
34	Caoutchouc	-	-	-	-	93110060	2
35	Plaquette	-	-	-	-	19579216	2
36	Cale	-	-	-	-	19579116	2
37	Vis	-	-	-	-	98290520	2

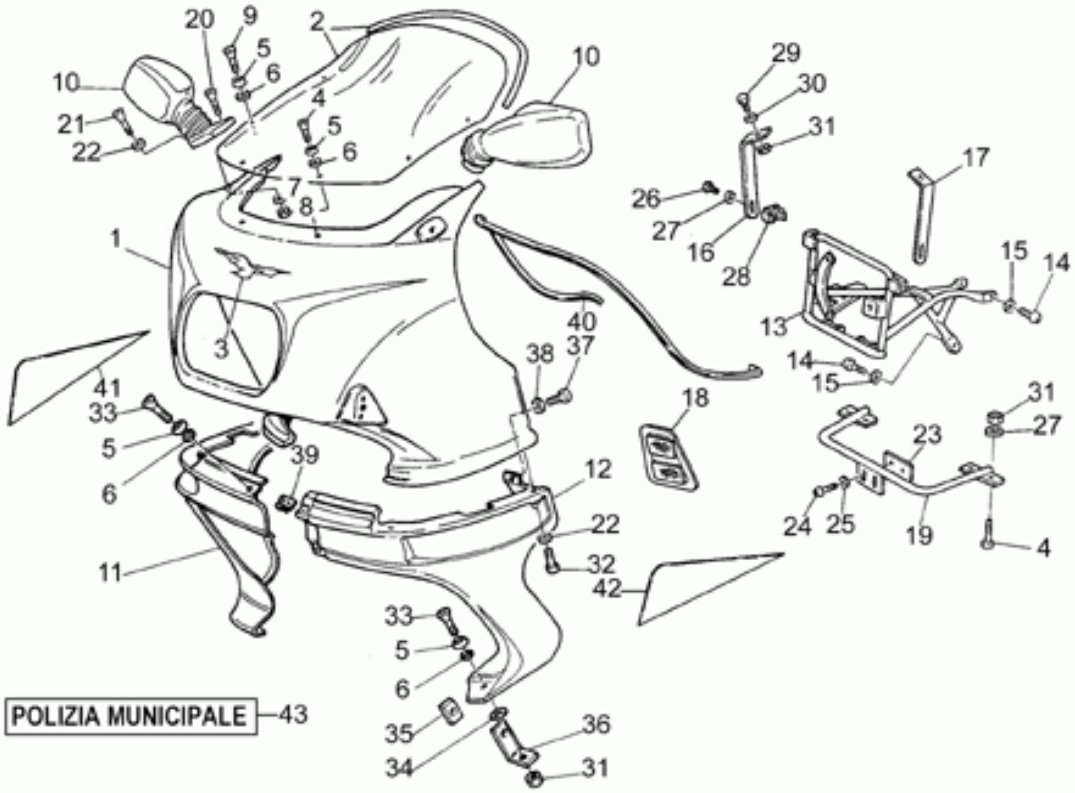

Ref.	Description	Year	I.M.	Country	Version	Code	Qty
38	Rondelle	-	-	-	-	29577860	2
39	Clip	-	-	-	-	28576590	2
40	Joint	-	-	-	-	00823931077	1
	Joint PVC	-	-	-	-	00823931080	1
41	Décalco d. noire	-	-	-	W/B	31924641	1
	Décalco d. bleue	-	-	-	W/RB	31924640	1
42	Décalco g. noire	-	-	-	W/B	31924741	1
	Décalco g. bleue	-	-	-	W/RB	31924740	1
43	Décalco P.Municipale	-	-	-	-	19924895	1

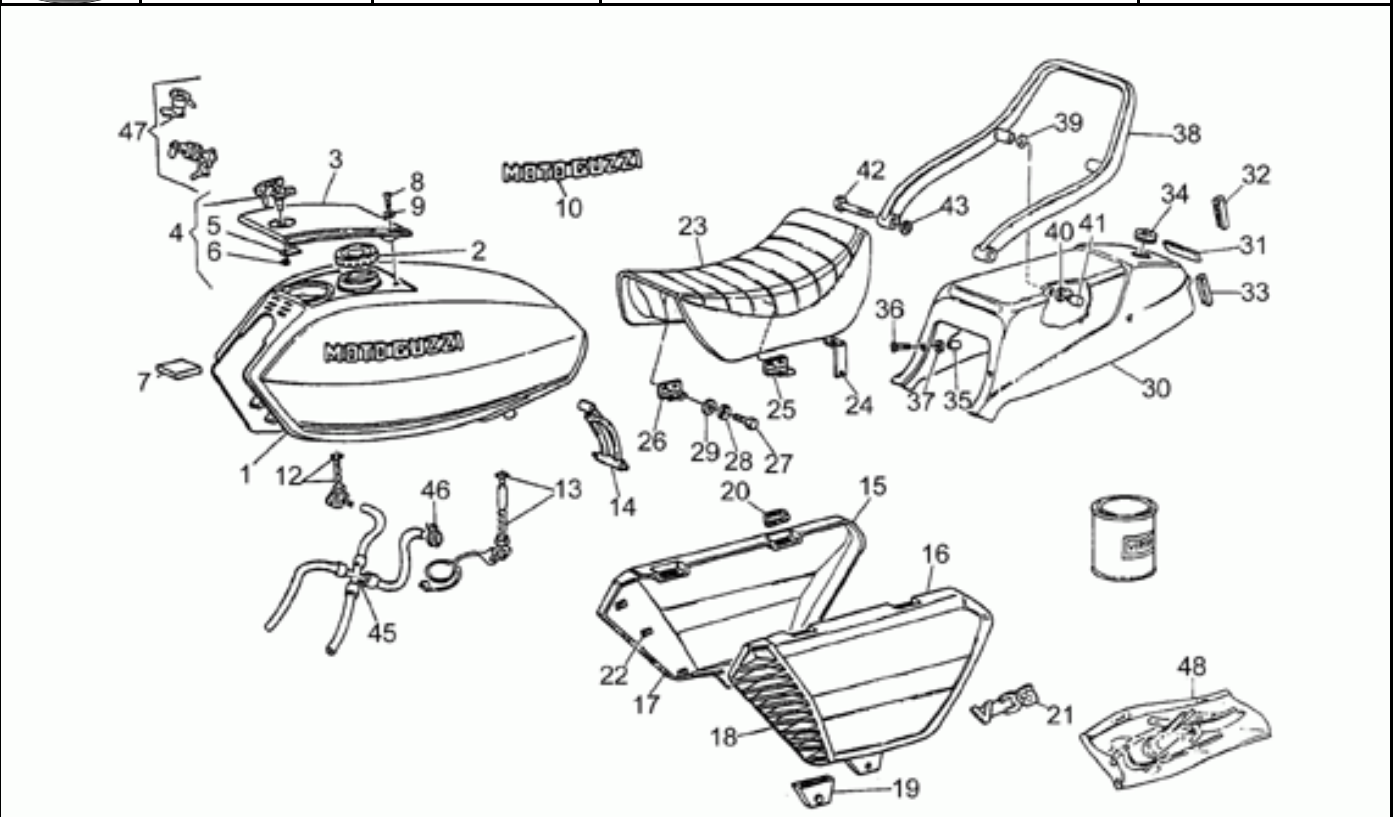

Ref.	Description	Year	I.M.	Country	Version	Code	Qty
1	Réservoir essence	-	-	-	Blue	19100215	1
	Réservoir brut	-	-	-	gr	191002051	1
	Réservoir essence	-	-	-	W	23100290	1
2	Bouchon réservoir	-	-	-	-	28103946	1
3	Couvercle réservoir	-	-	-	Blue	19104015	1
	Couvercle réservoir brut	-	-	-	gr	141040551	1
	Couvercle réservoir blanc	-	-	-	W	23104090	1
4	Serrures	-	-	-	-	14736856	1
5	Languette	-	-	-	-	18105001	1
6	Collier	-	-	-	-	19104950	1
7	Caoutchouc	-	-	-	-	19104336	1
8	Vis	-	-	-	-	98054210	2
9	Rondelle élastique 5,3X10X0,5	-	-	-	-	95129100	2
10	Plaquette "Moto Guzzi"	-	-	-	-	28917300	2
12	Robinet ess. d.	-	-	-	-	23105470	1
13	Robinet ess. g.	-	-	-	-	23105370	1
14	Tirant	-	-	-	-	19102750	1
15	Flanc D, bleu	-	-	-	-	19476215	1
	Flanc G, blanc	-	-	-	-	23476290	1
	Panneau latéral droit brut	-	-	-	-	194762501	1
16	Flanc D, blanc	-	-	-	-	23476390	1
	Flanc G, bleu	-	-	-	-	19476315	1
	Panneau latéral gauche brut	-	-	-	-	194763501	1
17	Grille droite	-	-	-	-	19478150	1
18	Grille gauche	-	-	-	-	19478250	1
19	Caoutchouc	-	-	-	-	19478550	2
20	Caoutchouc	-	-	-	-	19478750	4
21	Décor "V35"	-	-	-	-	19922000	2
22	Plaquette	-	-	-	-	39922200	10
23	Selle	-	-	-	-	23460590	1
24	Languette	-	-	-	-	28460945	1
25	Charnière arrière selle	-	-	-	-	28461345	1
26	Charnière avant selle	-	-	-	-	28461300	1
27	Vis M6X16	-	-	-	-	98054316	5
28	Rondelle 6,5X17X1.5	-	-	-	-	95100139	5
29	Rondelle évent.	-	-	-	-	95021106	5
30	Queue	-	-	-	Blue	19472616	1
	Queue brute	-	-	-	gr	234726901	1
	Queue blanche s.za decalco	-	-	-	W	23472690	1
31	Déc."MotoGuzzi"	-	-	-	-	28923400	1
32	Joint d.	-	-	-	-	28439845	1
33	Joint g.	-	-	-	-	28439846	1
34	Caoutchouc	-	-	-	-	28479945	1

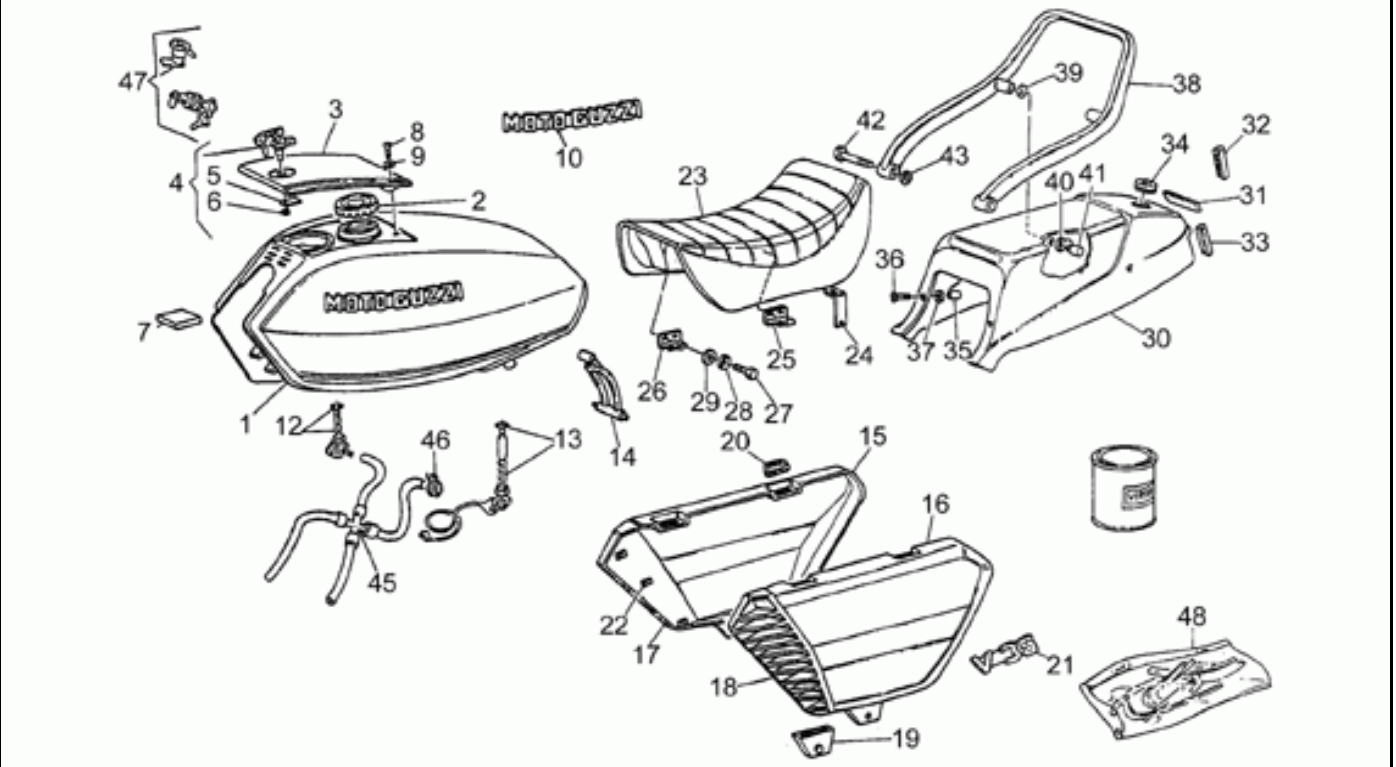

Ref.	Description	Year	I.M.	Country	Version	Code	Qty
35	Tige fixation	-	-	-	-	28472545	2
36	Vis	-	-	-	-	98280610	2
37	Rondelle	-	-	-	-	95000206	2
38	Poignée pass.	-	-	-	-	28464401	1
39	Rondelle	-	-	-	-	28478645	2
40	Entretoise	-	-	-	-	28471845	2
41	Pivot	-	-	-	-	28471945	2
42	Pivot	-	-	-	-	23466890	2
43	Rondelle	-	-	-	-	95129180	2
45	Tuyau essence	-	-	-	1A	29106500	1
	Tuyau essence	-	-	-	2A	008239560800	1
46	Collier	-	-	-	-	28108410	4
47	Kit serrure BOSCH	-	-	-	-	23736891	1
48	Décalco série nero	-	-	-	W/B	23923390003	1
	Décalco série	-	-	-	W/RB	23923390004	1

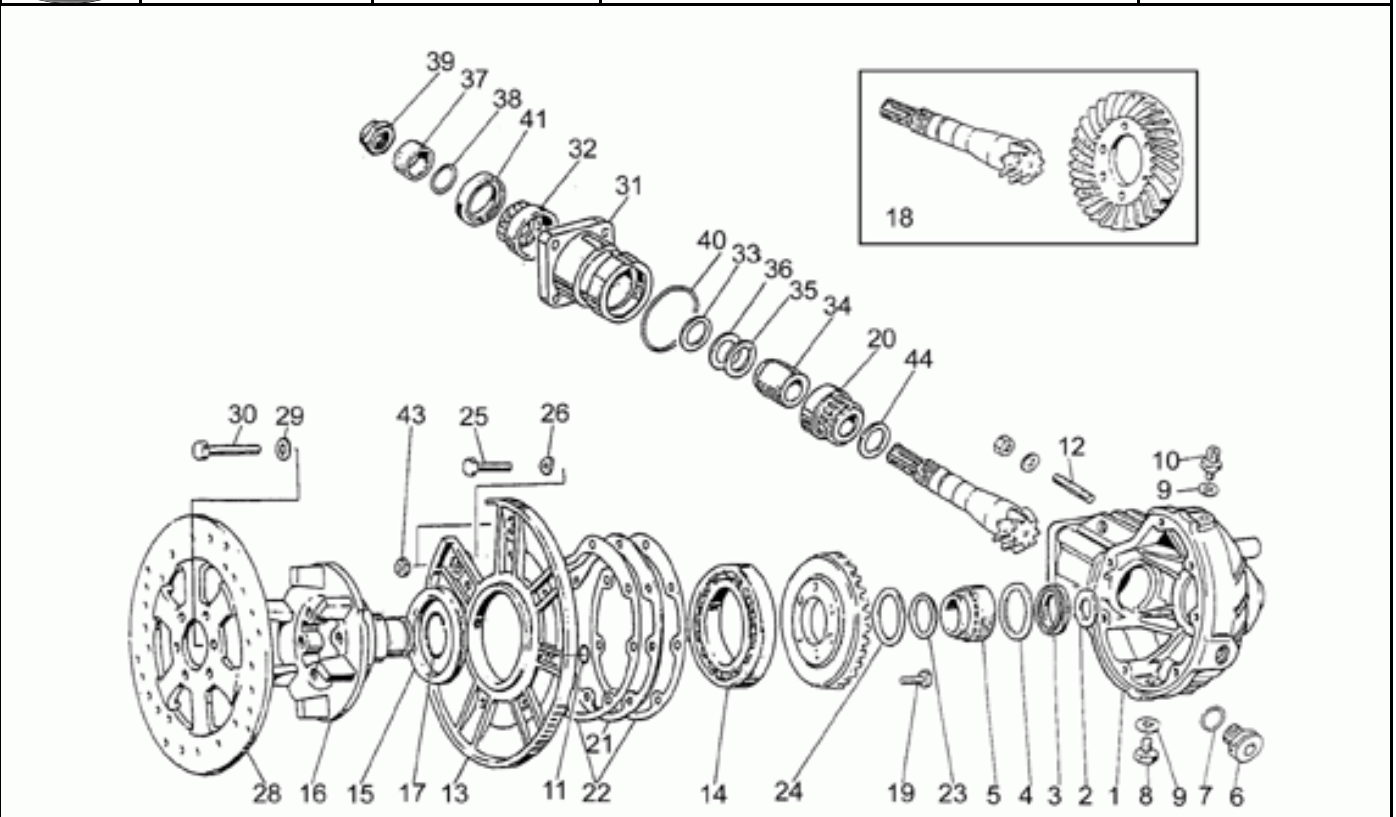

Ref.	Description	Year	I.M.	Country	Version	Code	Qty
1	Couvercle transmission gris	-	-	-	-	31350380	1
2	Rondelle d'appui	-	-	-	-	19351900	1
3	Bague d'étanchéité	-	-	-	-	90403547	1
4	Rondelle d'appui	-	-	-	-	19351100	1
5	Roulement à rouleaux 35x50x17	-	-	-	-	92252235	1
6	Bouchon huile	-	-	-	-	12022600	1
7	Joint torique 20,24x2,62	-	-	-	-	90706203	1
8	Bouchon vid.huile	-	-	-	-	31003766	1
9	Garniture	-	-	-	-	10528900	1
10	Bouchon purge	-	-	-	-	19206501	1
11	Joint torique	-	-	-	-	90706076	2
12	Vis sans tête	-	-	-	-	96508055	4
13	Couvercle	-	-	-	-	19350421	1
14	Roulement à billes 70x110x13	-	-	-	-	92201070	1
15	Bague d'étanchéité 75x90x8	-	-	-	-	90407590	1
16	Pivot	-	-	-	-	19351401	1
17	Bague de butée	-	-	-	-	90353030	1
18	Couple conique Z8/31	-	-	-	-	20354621	1
19	Vis	-	-	-	-	19356320	6
20	Roulement roul.con.	-	-	-	-	92249223	1
21	Cale 0,8 mm	-	-	-	-	19355400	1
	Cale 0,9 mm	-	-	-	-	19355402	1
	Cale 1 mm	-	-	-	-	19355404	1
	Cale 1,1 mm	-	-	-	-	19355406	1
	Cale 1,2 mm	-	-	-	-	19355408	1
	Cale 1,3 mm	-	-	-	-	19355410	1
	Cale 1,4 mm	-	-	-	-	19355411	1
	Cale 1,5 mm	-	-	-	-	19355412	1
	Cale 1,6 mm	-	-	-	-	19355413	1
22	Joint	-	-	-	-	19350700	2
23	Rondelle éventail	-	-	-	-	19352300	1
24	Rondelle éventail	-	-	-	-	19353500	1
25	Vis	-	-	-	-	19357660	7
26	Rondelle élastique	-	-	-	-	61270300	7
28	Disque frein arrière	-	-	-	-	19635736	1
29	Rondelle	-	-	-	-	14615901	6
30	Vis	-	-	-	-	98054418	6
31	Habillage roulement	-	-	-	-	19352401	1
32	Roulement à rouleaux 20x47x14	-	-	-	-	92249220	1
33	Cale 1 mm	-	-	-	-	19355300	2
	Cale 1,1 mm	-	-	-	-	19355301	2
	Cale 1,2 mm	-	-	-	-	19355302	2

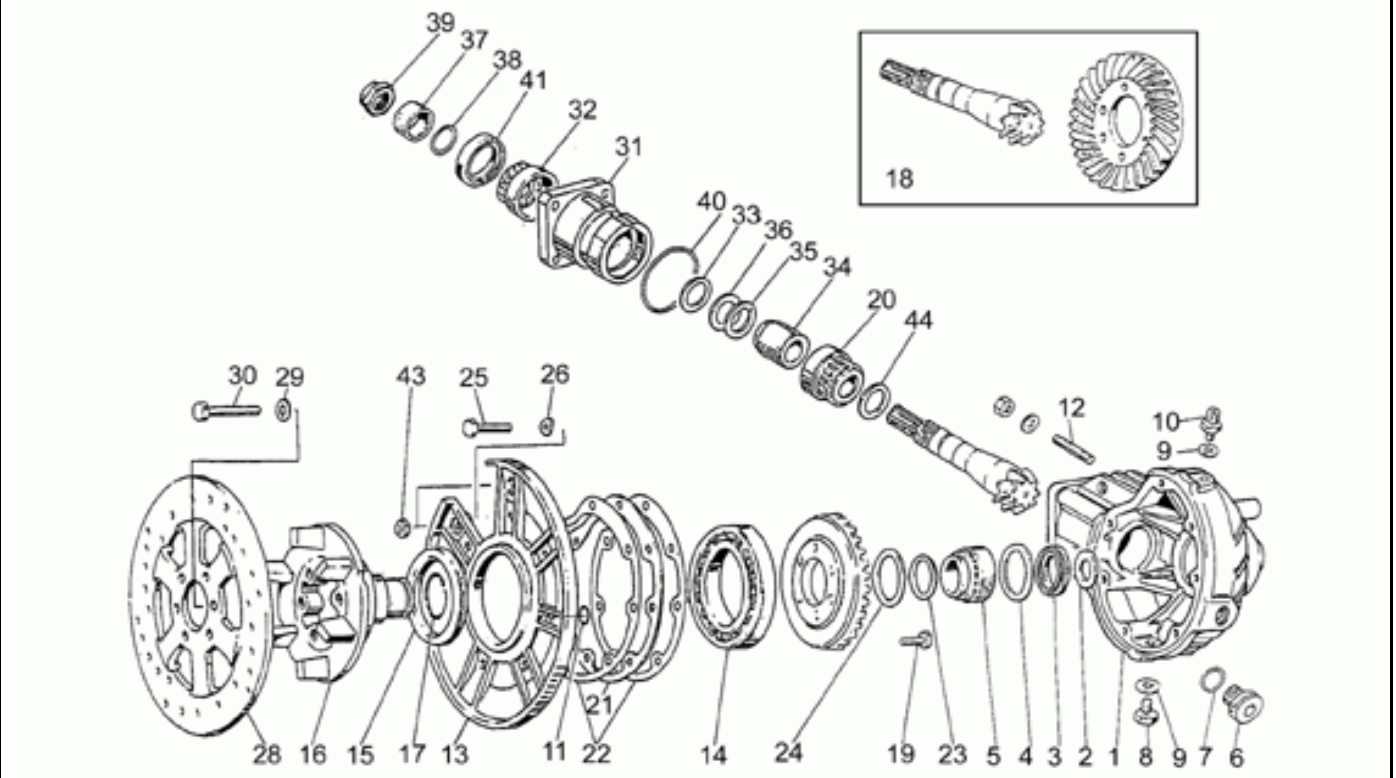

Ref.	Description	Year	I.M.	Country	Version	Code	Qty
33	Cale 1,3 mm	-	-	-	-	19355303	2
	Cale 1,4 mm	-	-	-	-	19355304	2
	Cale 1,5 mm	-	-	-	-	19355305	2
	Cale 1,6 mm	-	-	-	-	19355306	2
	Cale 1,7 mm	-	-	-	-	19355307	2
	Cale 1,8 mm	-	-	-	-	19355308	2
	Cale 1,9 mm	-	-	-	-	19355309	2
34	Entretoise	-	-	-	-	19355121	1
35	Rondelle ajustem. 0,1 mm	-	-	-	-	19355200	1
36	Rondelle ajustem. 0,15 mm	-	-	-	-	19355202	1
37	Entretoise	-	-	-	-	19356801	1
38	Bague d'étanchéité 18,77X1,78	-	-	-	-	90706188	1
39	Ecrou	-	-	-	-	19356700	1
40	Bague d'étanchéité	-	-	-	-	90706552	1
41	Bague d'étanchéité	-	-	-	-	90403247	1
43	Ecrou	-	-	-	-	92602208	2
44	Cale 1 mm	-	-	-	-	19355320	1
	Cale 1,1 mm	-	-	-	-	19355321	1
	Cale 1,2 mm	-	-	-	-	19355322	1
	Cale 1,3 mm	-	-	-	-	19355323	1
	Cale 1,4 mm	-	-	-	-	19355324	1
	Cale 1,5 mm	-	-	-	-	19355325	1
	Cale 1,6 mm	-	-	-	-	19355326	1
	Cale 1,7 mm	-	-	-	-	19355327	1
	Cale 1,8 mm	-	-	-	-	19355328	1
	Cale 1,9 mm	-	-	-	-	19355329	1

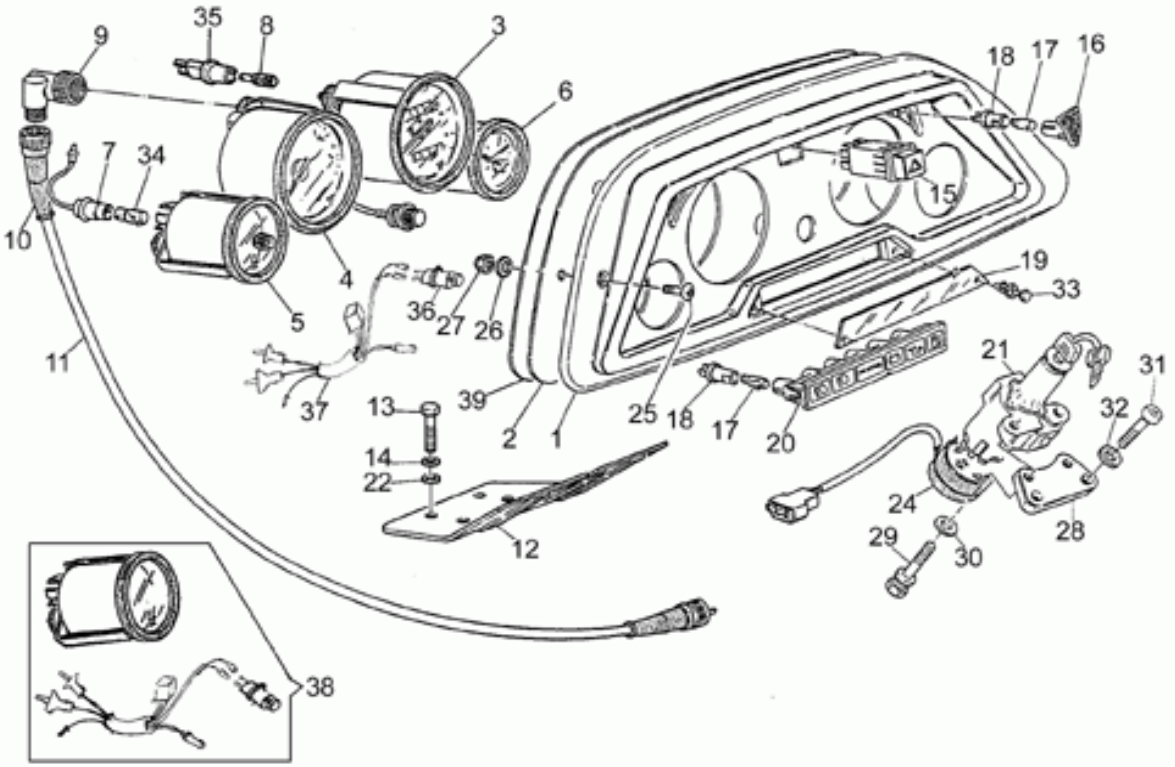

Ref.	Description	Year	I.M.	Country	Version	Code	Qty
1	Tableau de bord	-	-	-	T1	29766260	1
	Tableau de bord	-	-	-	T2	19766217	1
2	Support instruments	-	-	-	T1	31764140	1
	Support instruments	-	-	-	T2	19764117	1
3	Compteur kilométrique	-	-	-	-	27761535	1
4	Compte-tours MOTOPLAT	-	-	-	-	29767260	1
	Electronic revolution counter	-	-	-	D	28767235	1
5	Horloge ELETTRICO	-	-	-	-	29783061	1
6	Voltmètre	-	-	-	-	29784960	1
7	Porte-ampoule	-	-	-	-	28760633	1
8	Lampe (ou Ampoule) 12v-3w	-	-	-	-	93450120	3
9	Renvoi 90j	-	-	-	-	17768360	1
10	Gaine	-	-	-	-	17762200	1
11	Transmission tachymètre	-	-	-	-	27760410	1
12	Support émetteur	-	-	-	-	19502315	1
13	Vis	-	-	-	-	98074418	2
14	Rondelle	-	-	-	-	95007208	2
15	Turn indicator switch	-	-	-	-	28745761	1
16	Porte-témoins clignotants	-	-	-	-	65758970	2
17	Lampe (ou Ampoule) 12V-1,2W	-	-	-	-	93450140	8
18	Porte-ampoule	-	-	-	-	19768680	8
19	Cache vitré témoins	-	-	-	-	29781160	1
20	Boîtier témoins	-	-	-	-	27766985	1
21	Bloc démarreur-bloc	-	-	-	-	30782511	1
22	Rondelle	-	-	-	-	95000208	4
24	Câblage commutateur	-	-	-	-	29731460	1
25	Vis	-	-	-	-	98326021	2
26	Rondelle	-	-	-	-	95000206	2
27	Ecrou M6x1	-	-	-	-	92630106	2
28	Support commutateur	-	-	-	-	19782315	1
29	Vis à arrachement	-	-	-	-	97260425	2
30	Rondelle	-	-	-	-	95000208	2
31	Vis M8X35	-	-	-	-	98620435	2
32	Rondelle	-	-	-	-	95004208	2
33	Tige fixation	-	-	-	-	30753310	2
34	Lampe (ou Ampoule) 12V-4W	-	-	-	-	93450119	1
35	Porte-ampoule	-	-	-	-	14768650	3
36	Bouton	-	-	-	-	19761117	1
37	Câblage adaptateur	-	-	-	-	19761217	1
38	Horloge cpl.	-	-	-	-	29783061001	1
39	Support instruments	-	-	-	T2	19764316	1

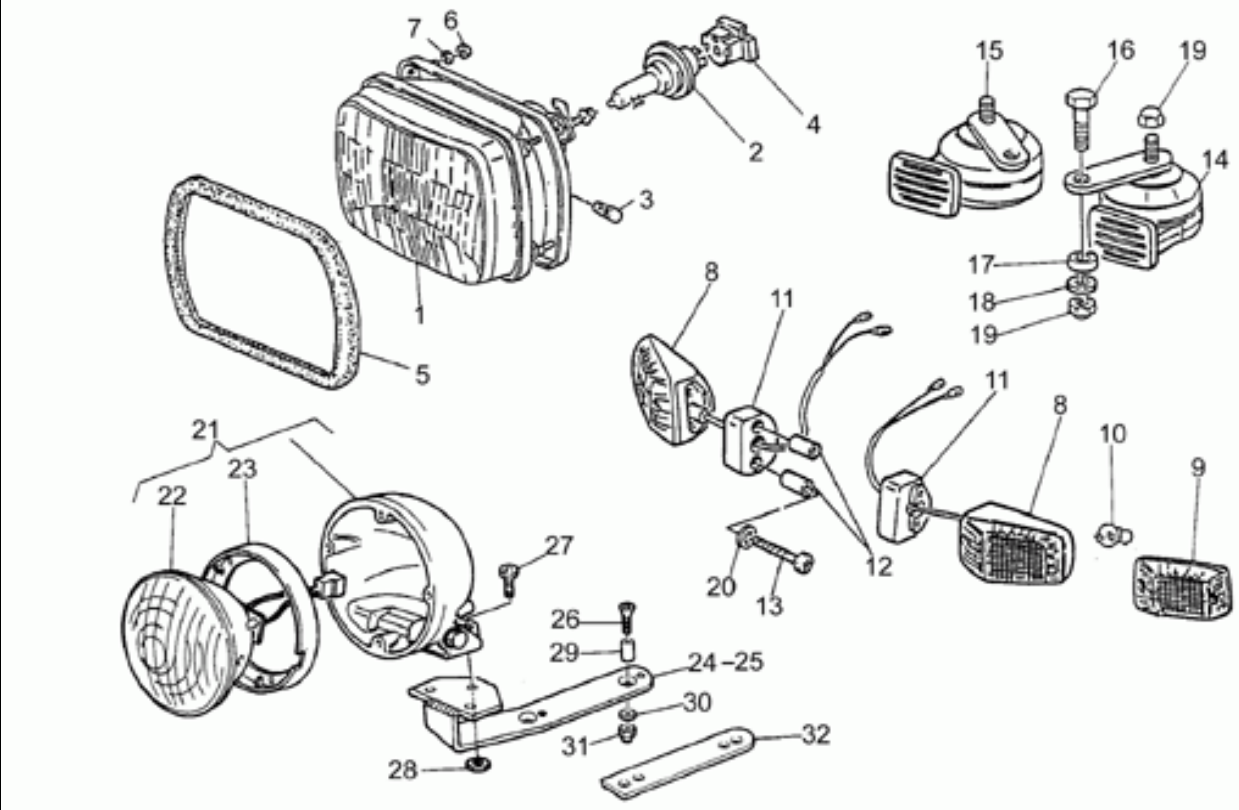

Ref.	Description	Year	I.M.	Country	Version	Code	Qty
1	Feu avant	-	-	-	-	28740560	1
2	Lampe (ou Ampoule) 12V-55/60W	-	-	-	-	93450232	1
3	Lampe (ou Ampoule) 12V-4W	-	-	-	-	93450119	1
4	Porte-ampoule	-	-	-	-	14756255	1
5	Joint	-	-	-	-	00823933090	1
6	Ecrou	-	-	-	-	92602205	4
7	Rondelle évent.	-	-	-	-	95021105	3
8	Clignotant AV	-	-	-	-	30750610	2
9	Vitre clignotant	-	-	-	-	23753710	2
10	Lampe (ou Ampoule) 12V-10W	-	-	-	-	93450127	2
11	Support clignotant	-	-	-	-	30751410	2
12	Entretoise	-	-	-	-	91180626	4
13	Vis	-	-	-	-	99210445	4
14	Avertisseur ton aigu	-	-	-	-	28743760	1
15	Avertisseur ton grave	-	-	-	-	28743761	1
16	Vis M6X16	-	-	-	-	98054316	2
17	Entretoise	-	-	-	-	91180605	2
18	Rondelle	-	-	-	-	95000206	2
19	Ecrou M6x1	-	-	-	-	92630206	4
20	Rondelle 5,25x14x1,5	-	-	-	-	95100059	4
21	Feu halogène cpl.bleu CPU	-	-	-	T1	31743335	2
	Front headlight BLU	-	-	-	T2	31743338	2
22	Feu suppl.halogène bleu CPU	-	-	-	-	23743392	2
23	Cadre phare	-	-	-	-	23742890	2
24	Bride droite	-	-	-	-	19728015	1
25	Bride gauche	-	-	-	-	19728115	1
26	Vis	-	-	-	-	98250630	4
27	Vis	-	-	-	-	98290520	6
28	Ecrou	-	-	-	-	92630105	6
29	Entretoise	-	-	-	-	91180615	4
30	Rondelle	-	-	-	-	95100123	4
31	Ecrou	-	-	-	-	92630207	4
32	Joint	-	-	-	-	19743815	2

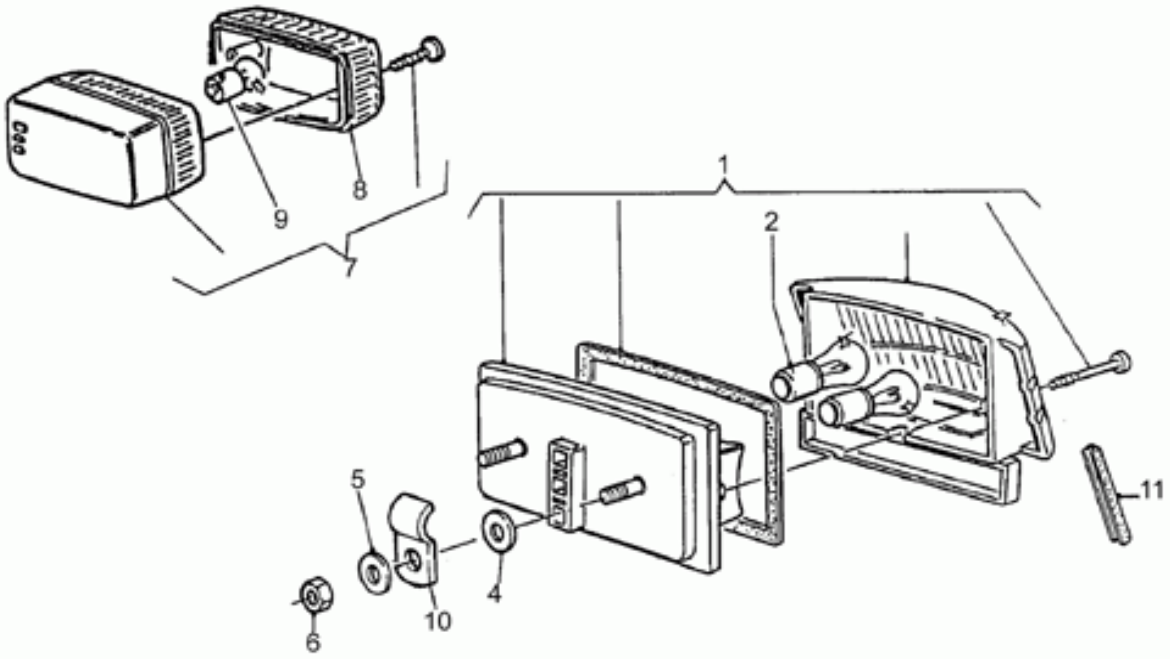

Ref.	Description	Year	I.M.	Country	Version	Code	Qty
1	Feu arrière	-	-	-	-	27740985	1
2	Lampe (ou Ampoule) 12V/5-21W	-	-	-	-	93450224	2
4	Caoutchouc	-	-	-	-	93110060	2
5	Cale	-	-	-	-	90716067	4
6	Ecrou M6x1	-	-	-	-	92630206	3
7	Clignotant arrière	-	-	-	-	28751647	2
8	Vitre clignotant	-	-	-	-	28753747	2
9	Lampe (ou Ampoule) 12V-10W	-	-	-	-	93450127	2
10	Cavalier	-	-	-	-	93301175	1
11	Joint	-	-	-	-	28439800	2

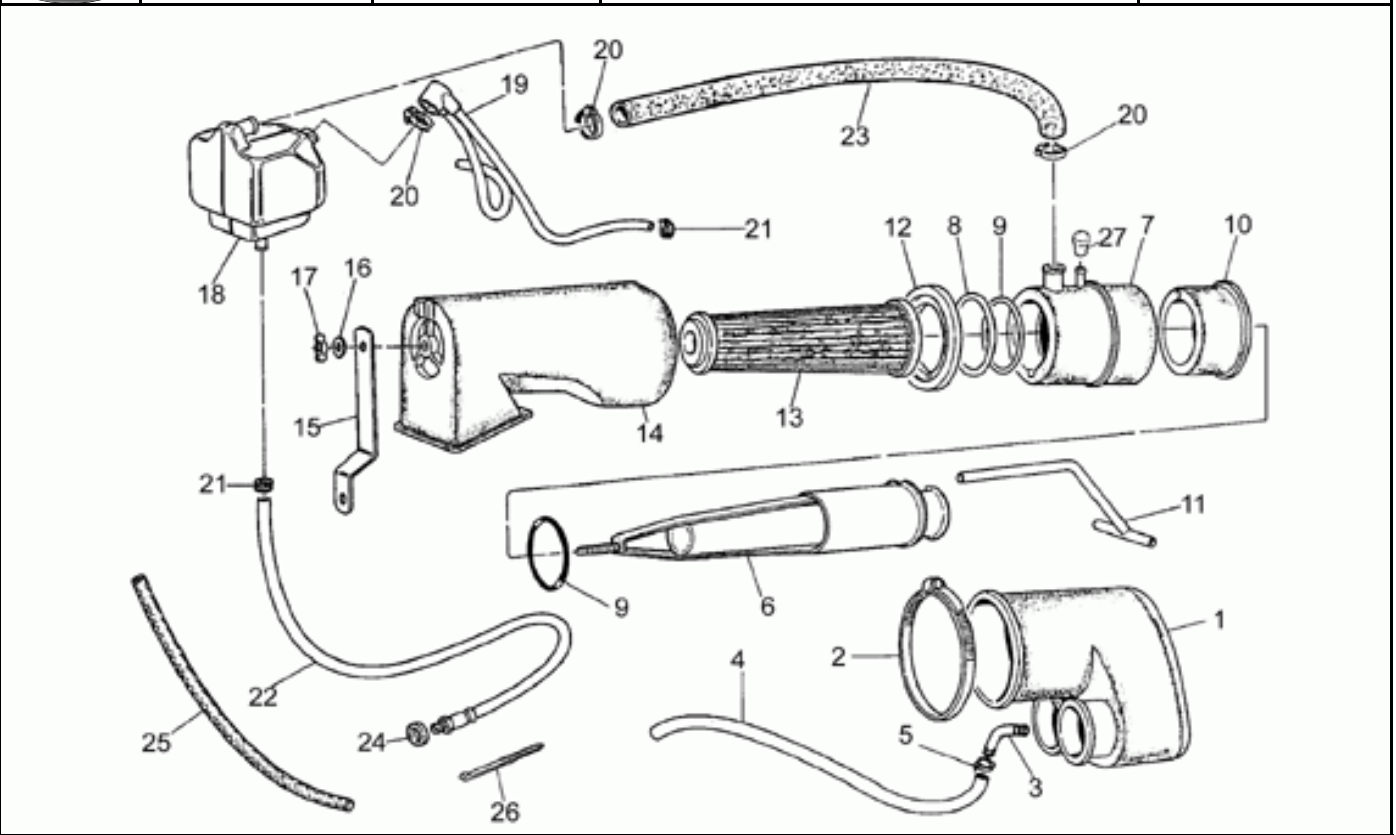

Ref.	Description	Year	I.M.	Country	Version	Code	Qty
1	Collecteur aspiration	-	-	-	-	19114300	1
2	Collier	-	-	-	-	93305092	1
3	Tuyau	-	-	-	-	17114650	1
4	Tuyau caoutchouc 5x9	-	-	-	-	00823944050	1
5	Collier	-	-	-	-	14609650	1
6	Support filtre	-	-	-	T1	19155775	1
	Support filtre	-	-	-	T2	31155780	1
7	Tuyau d'aspiration	-	-	-	-	19156701	1
8	Joint	-	-	-	-	19113900	1
9	Bague d'étanchéité	-	-	-	-	90706552	2
10	Rallonge manchon aspiration	-	-	-	-	19156900	1
11	Tuyau reniflard radiateur	-	-	-	-	19156001	1
12	Douille guidage	-	-	-	-	17113450	1
13	Filtre air	-	-	-	-	17113651	1
14	Couvercle filtre	-	-	-	-	17114050	1
15	Plaque support	-	-	-	-	27114120	1
16	Rondelle 5,25x14x1,5	-	-	-	-	95100059	1
17	Ecrou	-	-	-	-	92670305	1
18	Corp	-	-	-	-	31153481	1
19	Reniflard	-	-	-	T1	23159671	1
	Reniflard	-	-	-	T2	27159661	1
20	Collier	-	-	-	-	93305018	3
21	Collier	-	-	-	-	61108400	3
22	Reniflard	-	-	-	-	27159360	1
23	Tuyau	-	-	-	T1	30157430	1
	Tuyau	-	-	-	T2	27157420	1
24	Joint	-	-	-	T1	12154200	1
	Joint	-	-	-	T2	90714082	1
25	Gaine thermique	-	-	-	-	00823923140	1
26	Collier	-	-	-	-	61609630	1
27	Caoutchouc de ferm.	-	-	-	-	19433000	1

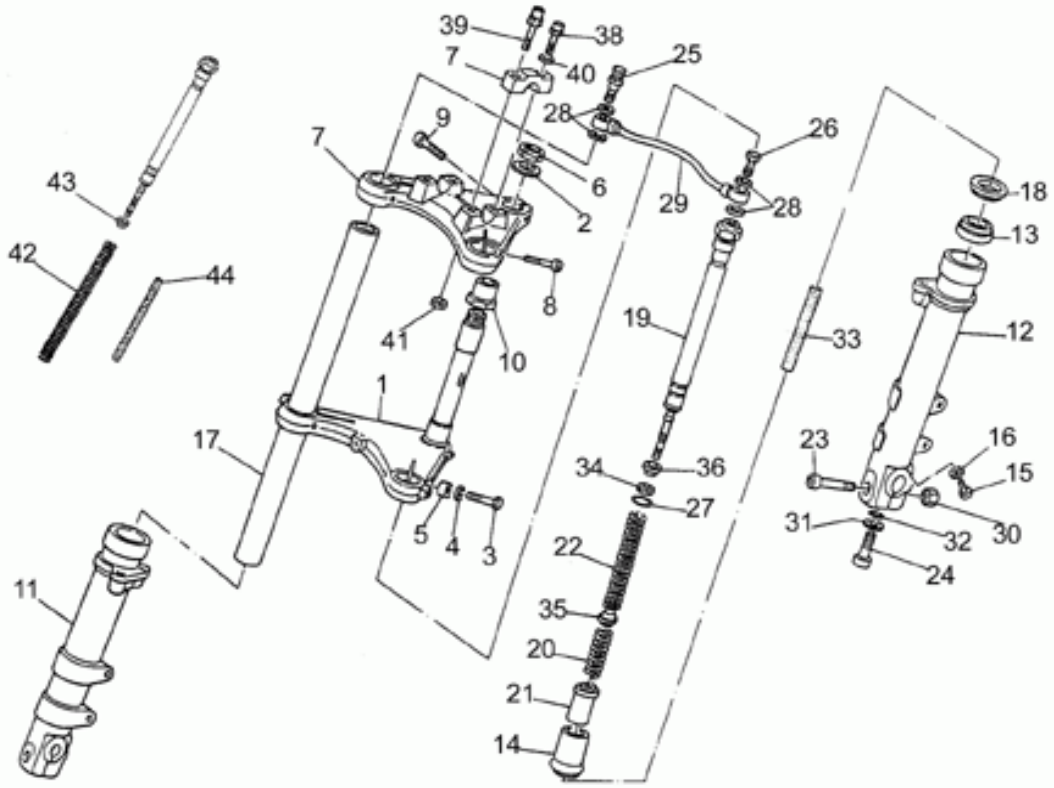

Ref.	Description	Year	I.M.	Country	Version	Code	Qty
1	Base avec tube	-	-	-	-	23494070	1
2	Rondelle bouchon fourreau	-	-	-	-	18513560	1
3	Vis M10X55	-	-	-	-	98072555	2
4	Rondelle	-	-	-	-	95007210	2
5	Entretoise	-	-	-	-	91181016	2
6	Bouchon tube	-	-	-	-	18513460	1
7	Plaque sup. fourche	-	-	-	-	23493140	1
8	Vis	-	-	-	-	98610540	2
9	Vis	-	-	-	-	98612535	1
10	Douille bloc. direction	-	-	-	-	18516660	1
11	Fourreau D	-	-	-	Blue	19522515	1
	Housse Dte-Gris-	-	-	-	W-W/B-W/RB	31522515	1
12	Fourreau G	-	-	-	Blue	19522615	1
	Housse Gche-Gris-	-	-	-	W-W/B-W/RB	31522615	1
13	Joint spi	-	-	-	-	90403857	2
14	Douille	-	-	-	-	20527620	2
15	Vis	-	-	-	-	98622320	2
16	Rondelle	-	-	-	-	95100116	4
17	Tige	-	-	-	-	23525470	2
18	Pare-poussière	-	-	-	-	31524550	2
19	Amortisseur	-	-	-	-	23526470	2
20	Contre-ressort	-	-	-	-	23526610	2
21	Tampon fin course	-	-	-	-	28527540	2
22	Ressort	-	-	-	-	23526910	2
23	Vis	-	-	-	-	98622545	2
24	Vis	-	-	-	-	98622530	2
25	Vis percée	-	-	-	-	28556450	1
26	Soupape air	-	-	-	-	28556250	1
27	Bague d'étanchéité	-	-	-	-	90706282	2
28	Rondelle en cuivre	-	-	-	-	28556350	4
29	Tuyau	-	-	-	-	19529660	1
30	Ecrou	-	-	-	-	92781100	2
31	Rondelle plate	-	-	-	-	27499120	2
32	Joint torique	-	-	-	-	90706094	2
33	Tube anti-frottement	-	-	-	-	23526370	2
34	Ecrou	-	-	-	-	92602308	2
35	Entretoise	-	-	-	-	23527910	2
36	Rondelle	-	-	-	-	28526540	2
37	Collier	-	-	-	-	17500200	2
38	Goujon	-	-	-	-	28500745	2
39	Goujon	-	-	-	-	19500715	2

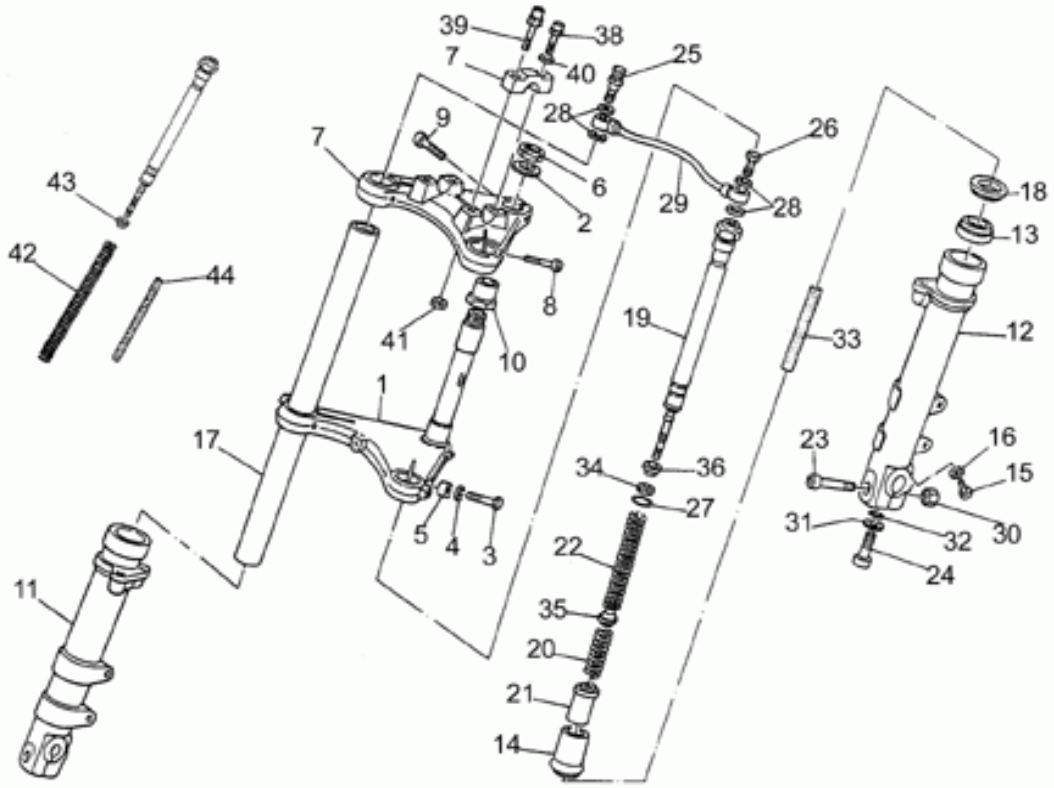

Ref.	Description	Year	I.M.	Country	Version	Code	Qty
40	Rondelle	-	-	-	-	95000208	4
41	Ecrou	-	-	-	-	92630108	2
42	Ressort	-	-	-	-	27526620	2
43	Bague	-	-	-	-	23526510	2
44	Tube anti-frottement	-	-	-	-	27526320	2

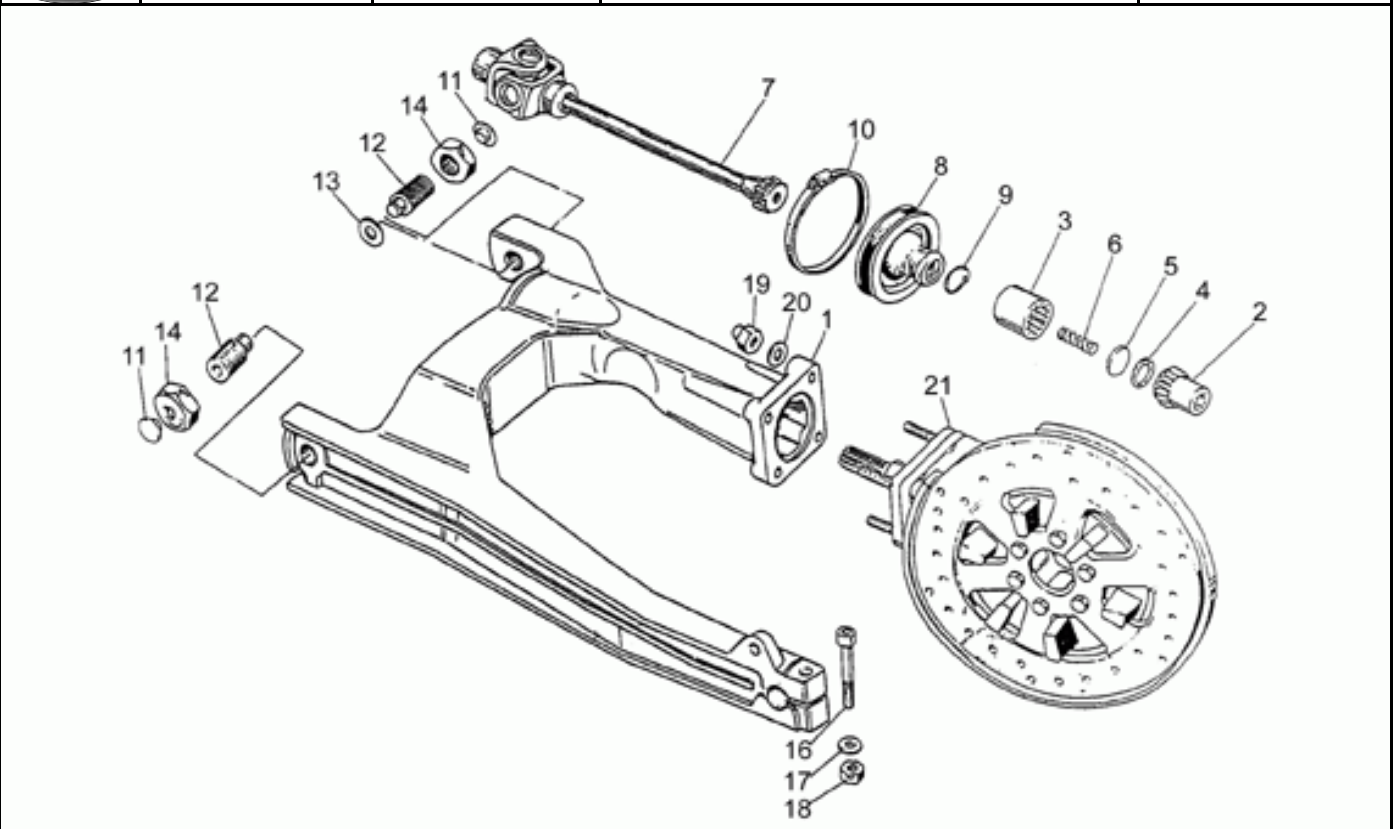

Ref.	Description	Year	I.M.	Country	Version	Code	Qty
1	Fourche ar.gris	-	-	-	-	31520280	1
	Fourche brute	-	-	-	-	23540282	1
2	Manchon	-	-	-	-	19327701	1
3	Manchon	-	-	-	-	19328801	1
4	Bague seeger	-	-	-	-	90272023	1
5	Disque	-	-	-	-	19327601	1
6	Ressort	-	-	-	-	94321099	1
7	Joint	-	-	-	-	23328081	1
8	Collier de protection	-	-	-	-	23548080	1
9	Ressort	-	-	-	-	23548180	1
10	Collier	-	-	-	-	93305074	1
11	Bouchon	-	-	-	-	93180105	2
12	Pivot	-	-	-	-	19547000	2
13	Cale	-	-	-	-	35214300	1
14	Ecrou	-	-	-	-	14547800	2
16	Vis	-	-	-	-	98620545	1
17	Rondelle 10,2x18x2	-	-	-	-	95004210	1
18	Ecrou	-	-	-	-	92602210	1
19	Ecrou	-	-	-	-	92781081	4
20	Rondelle	-	-	-	-	14615901	4
21	Boîte transm.cpl.brute	-	-	-	-	19350220	1
	Boîte transm.cpl.grise	-	-	-	-	20350220	1

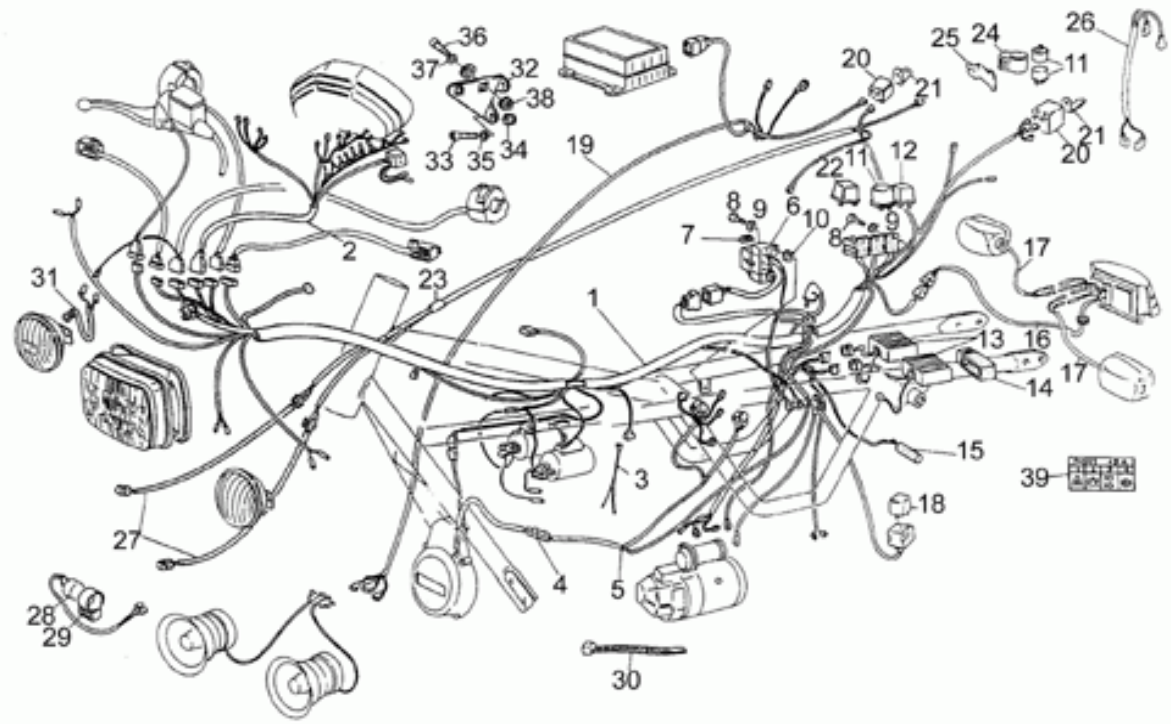

Ref.	Description	Year	I.M.	Country	Version	Code	Qty
1	Circuit electrique	-	-	-	-	23747191	1
	Circuit electrique	-	-	-	D	19747116	1
2	Câblage tableau de bord	-	-	-	-	29747260	1
3	Câble capteur point mort	-	-	-	-	31724540	1
4	Câblage alternateur BOSCH	-	-	-	B	23726300	1
5	Câblage alternat.-régulateur	-	-	-	-	23725891	1
6	Boîte à fusibles	-	-	-	-	30743000	1
7	Fusible 15A	-	-	-	-	28742560	6
8	Vis	-	-	-	-	98202516	4
9	Rondelle 5,25x14x1,5	-	-	-	-	95100059	4
10	Ecrou en cage	-	-	-	-	92660501	2
11	Clignotement	-	-	-	-	17750520	3
12	Relais démarrage	-	-	-	-	30732510	1
13	Centrale électronique	-	-	-	-	23721494	2
14	Support élastique	-	-	-	-	27723835	2
15	Condensateur	-	-	-	-	27710435	1
16	Câblage feu AR	-	-	-	-	30747310	1
17	Cablage clignot.	-	-	-	-	28753145	2
18	Interrupteur béquille	-	-	-	-	29732550	1
19	Câblage sirènes deux tons	-	-	-	-	23726191	1
20	Relais sirènes SWF	-	-	-	-	28732545	2
21	Support relais	-	-	-	-	28732946	2
22	Relais sirènes	-	-	-	-	28732560	1
23	Câblage intermittences	-	-	-	-	23757791	1
24	Bloc	-	-	-	-	17751200	1
25	Plaque	-	-	-	-	17750400	1
26	Cablage	-	-	-	-	18720150	1
27	Cablage 1 LAMP.	-	-	-	-	23720190	2
28	Klaxon	-	-	-	-	28787247	1
29	Bloc	-	-	-	-	30787310	1
30	Collier	-	-	-	-	14609650	20
31	Cablage 2 LAMP.	-	-	-	T2	23720191	2
32	Support relais	-	-	-	D	31704061	1
33	Vis	-	-	-	D	98622214	2
34	Ecrou	-	-	-	D	92630105	2
35	Rondelle	-	-	-	D	95004205	2
36	Vis M5x10	-	-	-	D	98230510	2
37	Rondelle	-	-	-	D	95100064	2
38	Ecrou en cage	-	-	-	D	92660501	2
39	Décal tabelle fusibles	-	-	-	D	30945000	1

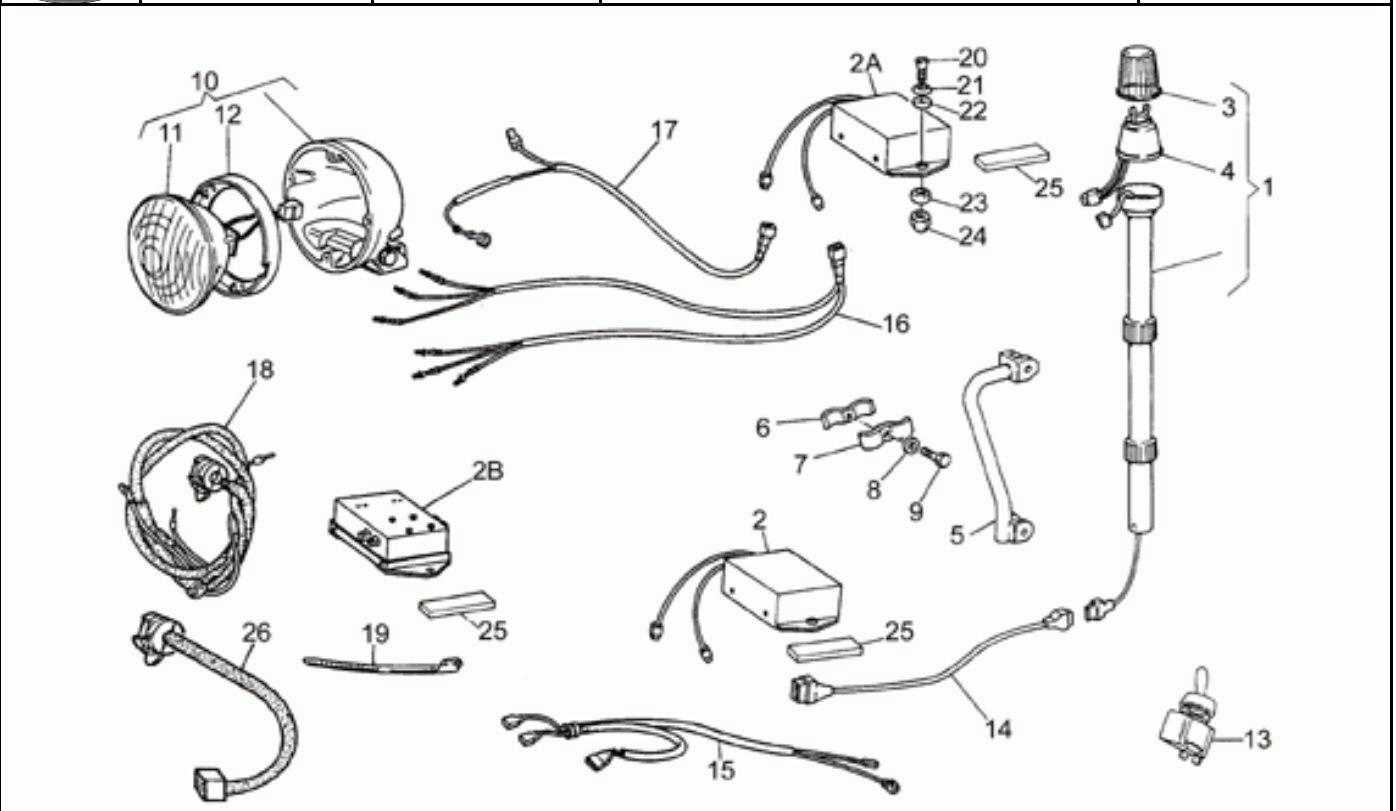

Ref.	Description	Year	I.M.	Country	Version	Code	Qty
1	Motorized strobo kit VAMA	-	-	-	-	28786245	1
2	Centrale électronique	-	-	-	1C	20946520	1
	Centrale électronique	-	-	-	2C	20946520	1
	Centrale 183 3CAN	-	-	-	3C	23785990	1
	Centrale électronique FA520/M	-	-	-	V3C	20785922	1
3	Glace strobo	-	-	-	-	28798245	1
4	Lampe strobo	-	-	-	-	28798345	1
5	Support strobo	-	-	-	-	28785645	1
6	Cavalier	-	-	-	-	28786445	3
7	Cavalier	-	-	-	-	28786345	3
8	Rondelle spéciale	-	-	-	-	61013800	3
9	Vis	-	-	-	-	98074314	3
10	Front headlight BLU	-	-	-	-	31743338	2
11	Feu clignotant AV nu BLU	-	-	-	-	23743390	2
12	Cadre phare	-	-	-	-	23742890	2
13	Interrupteur	-	-	-	-	18745701	1
14	Câblage centr.-strobo 1can	-	-	-	1C	23756991	1
15	Câblage centrale 1can	-	-	-	1C	23757893	1
16	Câblage centr.feux clignotants 2can	-	-	-	2C	23750991	1
17	Câblage centrale 2can	-	-	-	2C	23757891	1
18	Câblage lumières bleues 3can	-	-	-	3C	23726290	1
	Câblage lumières bleues	-	-	-	V3C	23726294	1
19	Collier	-	-	-	-	14609650	20
20	Vis	-	-	-	-	98250630	2
21	Rondelle	-	-	-	-	18577850	2
22	Joint torique	-	-	-	-	45212400	2
23	Cale	-	-	-	-	90716067	2
24	Ecrou M6x1	-	-	-	-	92630106	2
25	Joint	-	-	-	-	23785391	2
26	Interrupteur	-	-	-	V3C	20726220	1

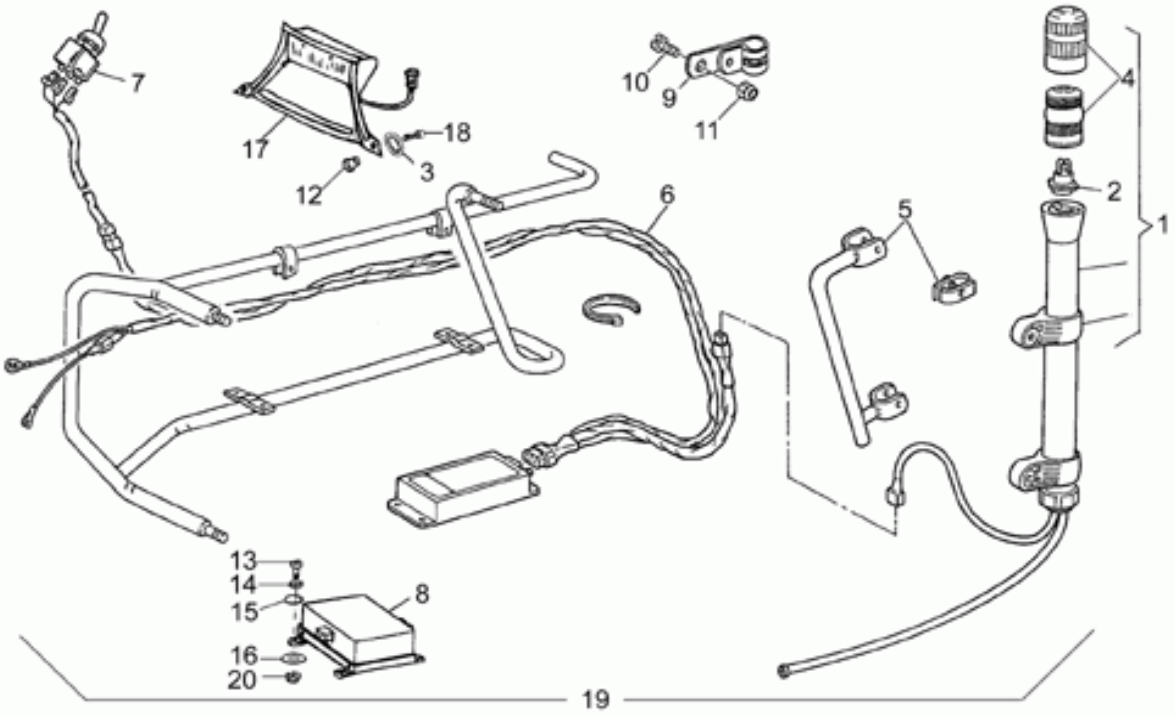

Ref.	Description	Year	I.M.	Country	Version	Code	Qty
1	Motorized strobo kit SONORA	-	-	-	-	28786225	1
2	Lampe strobo	-	-	-	-	28530580	1
3	Rondelle	-	-	-	-	29577860	2
4	Glace strobo	-	-	-	-	28530529	1
5	Support strobo	-	-	-	-	28785625	1
6	Câblage centr.-strobo SONORA	-	-	-	-	28726280	1
7	Interrupteur	-	-	-	-	20745720	1
8	Centrale électronique	-	-	-	DFH12V	28785980	1
9	Collier	-	-	-	-	17658360	1
10	Vis	-	-	-	-	98202516	1
11	Ecrou	-	-	-	-	92630205	1
12	Caoutchouc	-	-	-	-	93231606	2
13	Vis	-	-	-	-	98230625	2
14	Rondelle	-	-	-	-	18577850	2
15	Joint torique	-	-	-	-	45212400	2
16	Caoutchouc	-	-	-	-	93110060	2
17	Feu avant	-	-	-	-	23743395	1
18	Vis	-	-	-	-	98230622	2
19	Motorized strobo kit SONORA	-	-	-	-	28999580	1
20	Ecrou M6x1	-	-	-	-	92630206	2

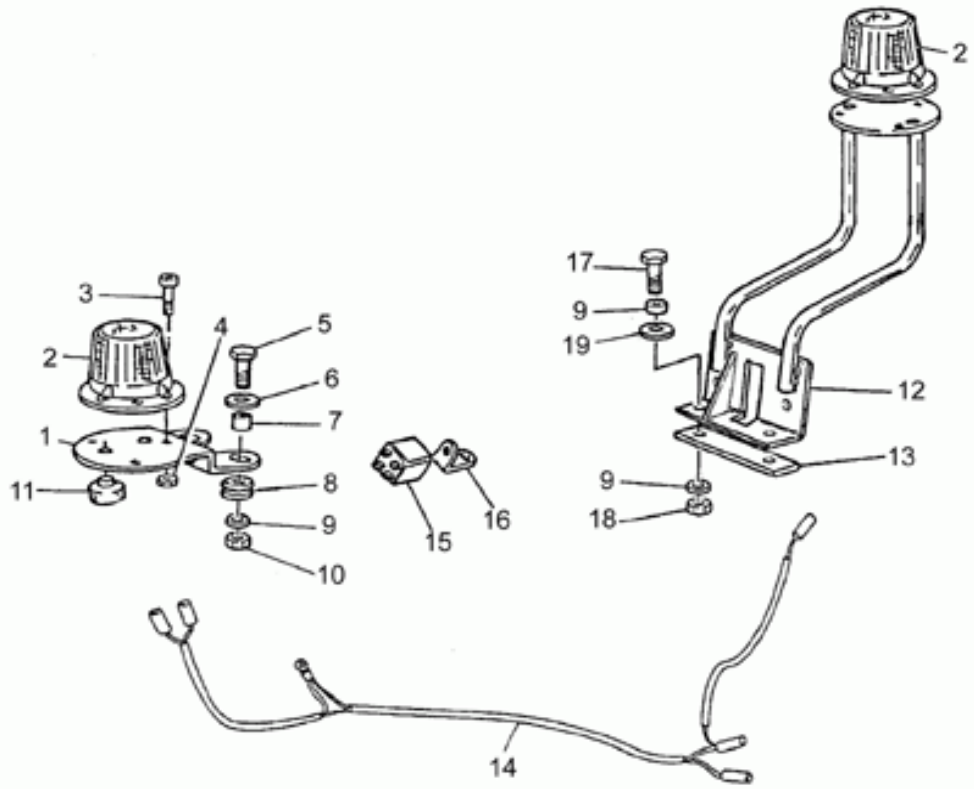

Ref.	Description	Year	I.M.	Country	Version	Code	Qty
1	Support clignotant	-	-	-	-	28726581	1
2	Support clignotant cpl.	-	-	-	-	17726680	2
3	Vis	-	-	-	-	98202420	6
4	Ecrou M4x0,7	-	-	-	-	92630104	6
5	Vis	-	-	-	-	98054318	2
6	Rondelle 6,5x20x2	-	-	-	-	95100141	2
7	Entretoise	-	-	-	-	91180607	2
8	Caoutchouc	-	-	-	-	91551085	2
9	Rondelle	-	-	-	-	95000206	6
10	Ecrou	-	-	-	-	92781062	2
11	Caoutchouc	-	-	-	-	28726981	1
12	Support clignotant	-	-	-	-	28726881	1
13	Plaque	-	-	-	-	28726780	1
14	Câblage lumières bleues	-	-	-	-	28750981	1
15	Relais sirènes SWF	-	-	-	-	28732545	1
16	Support relais	-	-	-	-	28732946	1
17	Vis	-	-	-	-	98074320	2
18	Ecrou M6x1	-	-	-	-	92630106	2
19	Cale	-	-	-	-	90716067	2

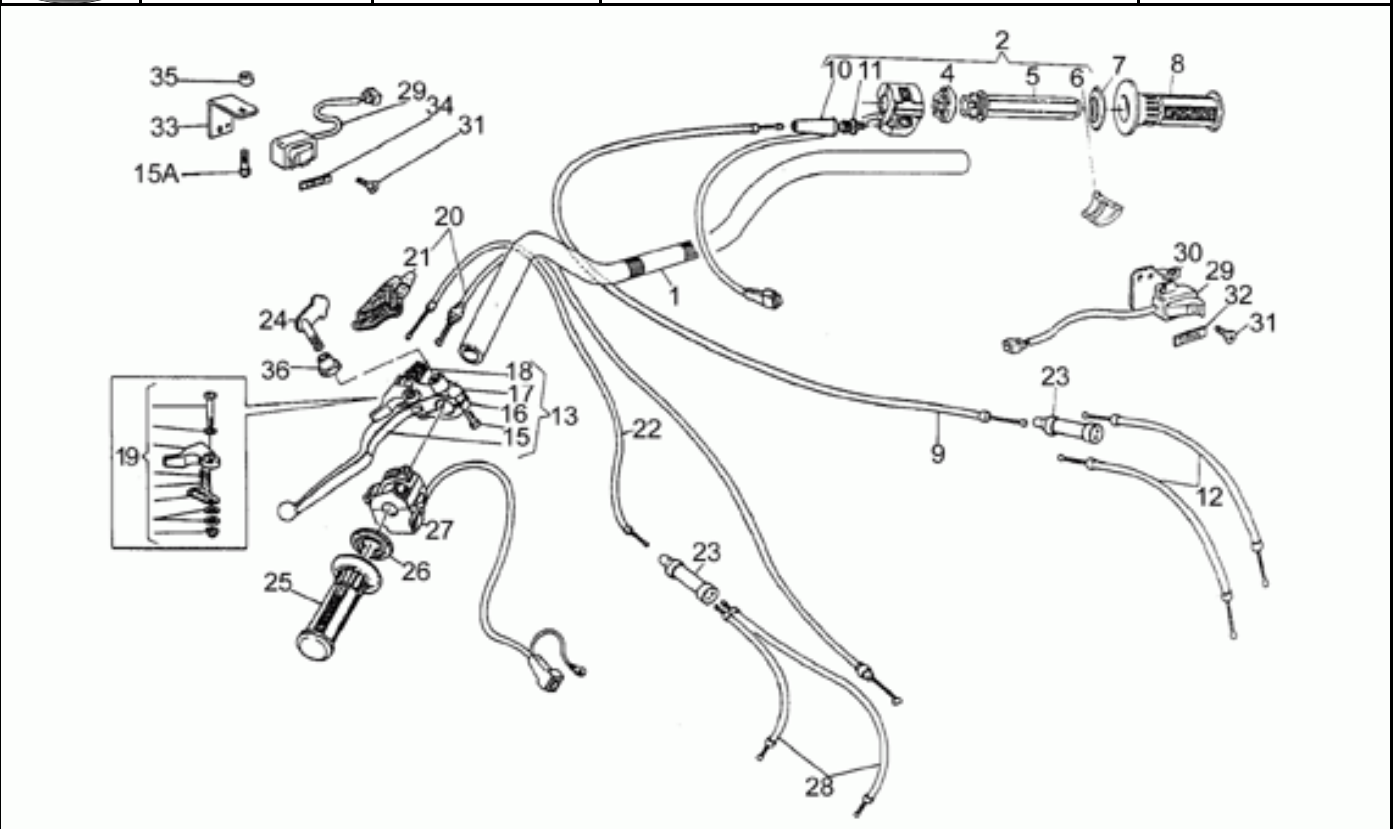

Ref.	Description	Year	I.M.	Country	Version	Code	Qty
1	Guidon	-	-	-	-	30600310	1
2	Commande gaz	-	-	-	-	27738815	1
4	Bloc conduite	-	-	-	-	27604415	1
5	Corps mobile	-	-	-	-	27603815	1
6	Guide-câble	-	-	-	-	27604515	1
7	Bague	-	-	-	-	27603620	1
8	Poignée dr.	-	-	-	-	19603515	1
9	Câble gaz	-	-	-	-	27117515	1
10	Capuchon	-	-	-	-	27117615	1
11	Vis embrayage	-	-	-	-	27603715	1
12	Câble gaz	-	-	-	T1	23117730	2
	Câble gaz	-	-	-	T2	27117775	2
13	Levier embrayage complet	-	-	-	-	30605530	1
15	Vis	-	-	-	-	27601215	2
	Vis	-	-	-	-	98612225	1
16	Cavalier	-	-	-	-	27601015	1
17	Cavalier levier embr	-	-	-	-	27601815	1
18	Réglage	-	-	-	-	30602500	1
19	Levier	-	-	-	-	27659415	1
20	Câble embrayage	-	-	-	-	27093022	1
21	Protection	-	-	-	-	27663815	1
22	Câble starter	-	-	-	-	27132815	1
23	Dedoublereur	-	-	-	-	30607910	2
24	Support interrupteur	-	-	-	-	19504025	1
25	Poignée gc.	-	-	-	-	19603015	1
26	Bague	-	-	-	-	27603120	1
27	Déviateur feux gche	-	-	-	-	27738015	1
28	Câble starter	-	-	-	-	27133515	2
29	Interrupteur	-	-	-	-	19756315	2
30	Support droite	-	-	-	-	19756725	1
31	Vis taraud	-	-	-	-	99220207	2
32	Décalco int.sirène	-	-	-	-	19924825	1
33	Support gauche	-	-	-	-	19756715	1
34	Décalco int.lumières	-	-	-	-	19924815	1
35	Entretoise	-	-	-	-	91180607	1
36	Ecrou	-	-	-	-	19769625	1

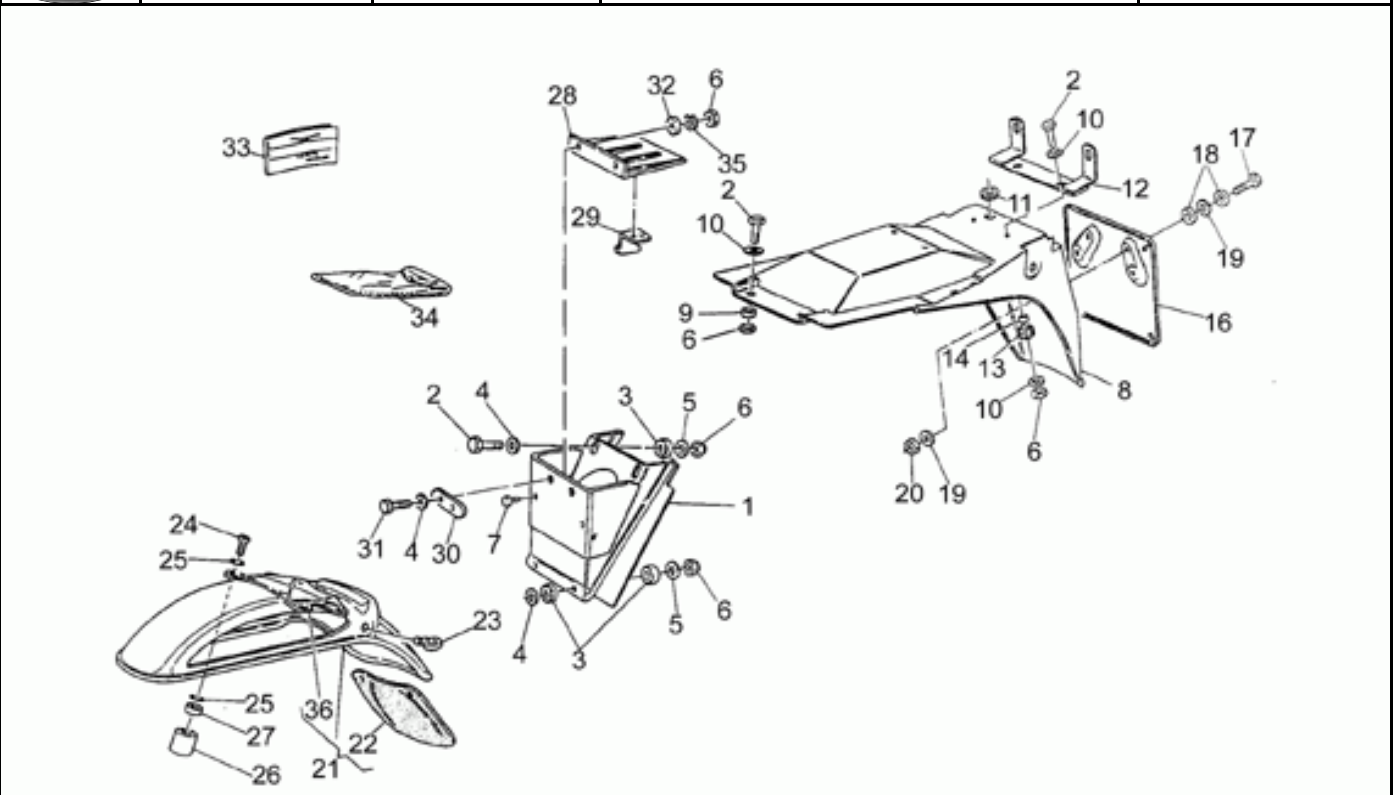

Ref.	Description	Year	I.M.	Country	Version	Code	Qty
1	Bavette anti-éclaboussures	-	-	-	-	23438690	1
	Bavette anti-éclaboussures	-	-	-	D	20438720	1
2	Vis M6X20	-	-	-	-	98054320	6
3	Caoutchouc	-	-	-	-	93110060	8
4	Rondelle	-	-	-	-	95000206	6
5	Rondelle 6,5x20x2	-	-	-	-	95100141	4
6	Ecrou M6x1	-	-	-	-	92630106	10
7	Tampon	-	-	-	-	19705900	2
8	Garde-boue Ar.	-	-	-	-	19437015	1
9	Caoutchouc	-	-	-	-	93110082	2
10	Rondelle 6,15x11x0,8	-	-	-	-	95008206	8
11	Caoutchouc pass.câble	-	-	-	-	91551092	1
12	Support phare AR	-	-	-	-	27474385	1
13	Caoutchouc	-	-	-	-	91551085	2
14	Entretoise	-	-	-	-	91180607	2
16	Porte-plaque	-	-	-	-	14474650	1
17	Vis	-	-	-	-	98052220	4
18	Cale	-	-	-	-	90716057	8
19	Rondelle 5,25x14x1,5	-	-	-	-	95100059	8
20	Ecrou	-	-	-	-	92630105	4
21	Garde-boue Av.	-	-	-	Blue	19434316	1
	Garde-boue av.brut	-	-	-	gr	274344201	1
	Garde-boue Av.	-	-	-	W	31434382	1
22	Bavette anti-éclaboussures	-	-	-	-	27436920	1
23	Oeillet	-	-	-	-	28659740	1
24	Vis	-	-	-	-	98230845	4
25	Joint torique	-	-	-	-	90706092	8
26	Entretoise	-	-	-	-	31436415	4
27	Douille	-	-	-	-	28436460	4
28	Plaque fix. Centrale	-	-	-	-	23439010	1
29	Support	-	-	-	-	23438510	2
30	Plaquette	-	-	-	-	23439210	1
31	Vis	-	-	-	-	98054312	2
32	Rondelle	-	-	-	-	95100118	2
33	Man. instr/entr-F-	-	-	I	-	19900015	1
34	Trousse à outils	-	-	-	-	28929940	1
35	Rondelle évent.	-	-	-	-	95021106	2
36	Plaque de stabilisation	-	-	-	-	27436620	1

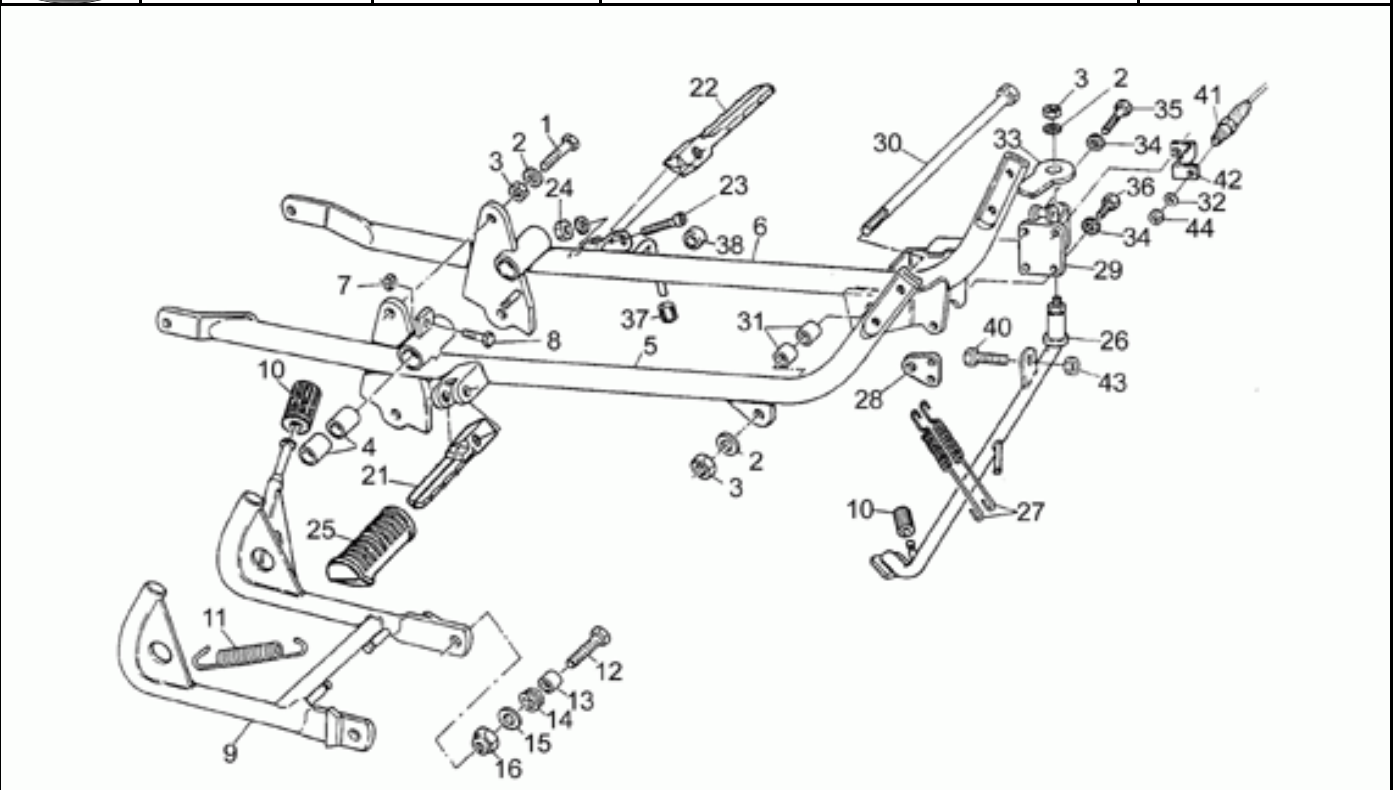

Ref.	Description	Year	I.M.	Country	Version	Code	Qty
1	Vis	-	-	-	-	98052565	2
2	Rondelle 10,2x18x2	-	-	-	-	95004210	5
3	Ecrou	-	-	-	-	92602210	5
4	Douille 18 mm est.	-	-	-	-	28252060	4
5	Bras d.	-	-	-	-	19420315	1
6	Bras g.	-	-	-	-	19422115	1
7	Ecrou	-	-	-	-	92602206	1
8	Vis M6X22	-	-	-	-	98054322	1
9	Béquille centrale	-	-	-	-	23430391	1
10	Pédale en caoutch.	-	-	-	-	13432640	2
11	Ressort rappel béq.	-	-	-	-	12434001	2
12	Vis	-	-	-	-	98054530	2
13	Entretoise	-	-	-	-	91181114	2
14	Ressort	-	-	-	-	94322215	1
15	Rondelle	-	-	-	-	95000210	2
16	Ecrou M10x1,5	-	-	-	-	92630510	2
21	Tuyau rep.-pieds av.d.	-	-	-	-	28440760	1
22	Tuyau rep.-pieds av.g.	-	-	-	-	28441860	1
23	Vis	-	-	-	-	98053435	2
24	Ecrou	-	-	-	-	92602208	2
25	Pédale en caoutch.	-	-	-	-	28443201	2
26	Bras latérale noire	-	-	-	-	19432016	1
27	Ressort	-	-	-	-	19434069	2
28	Plaque	-	-	-	-	18432760	1
29	Bloc	-	-	-	-	13433440	1
30	Pivot M10x250	-	-	-	-	53429500	1
31	Bague	-	-	-	-	19017000	2
32	Rondelle élastique	-	-	-	-	61270300	4
33	Arrêt	-	-	-	-	03432740	1
34	Rondelle élastique	-	-	-	-	95021108	4
35	Vis	-	-	-	-	98052440	1
36	Vis M8X16	-	-	-	-	98054416	3
37	Caoutchouc	-	-	-	-	14423800	1
38	Tampon	-	-	-	-	12433000	1
40	Vis	-	-	-	-	98054216	1
41	Interrupteur embrayage	-	-	-	-	29759150	1
42	Bride	-	-	-	-	29433850	1
43	Ecrou	-	-	-	-	92602205	1
44	Ecrou M8X1	-	-	-	-	92602508	1

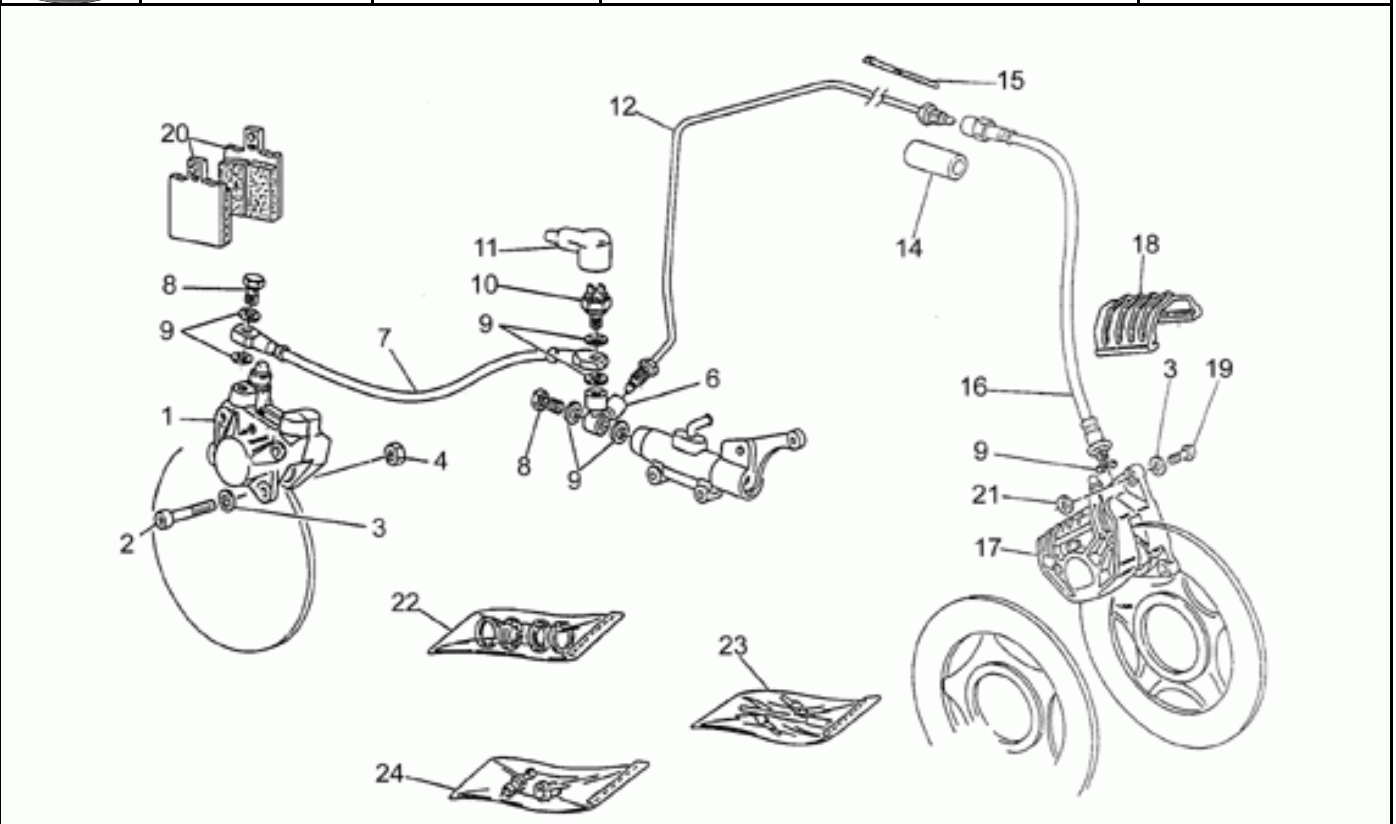

Ref.	Description	Year	I.M.	Country	Version	Code	Qty
1	Pince frein arrière	-	-	-	-	23653011	1
2	Vis	-	-	-	-	98622422	2
3	Rondelle élastique	-	-	-	-	61270300	2
4	Ecrou	-	-	-	-	92602208	2
6	Raccord	-	-	-	-	19668000	1
7	Tube frein	-	-	-	-	19658660	1
8	Vis spéciale	-	-	-	-	95990028	2
9	Joint 1mm	-	-	-	-	25656100	7
10	Interrupteur stop	-	-	-	-	14657050	1
11	Capuchon	-	-	-	-	12735100	1
12	Tuyau	-	-	-	-	19658735	1
14	Protection	-	-	-	-	17573860	1
15	Collier	-	-	-	-	14609650	3
16	Tube frein	-	-	-	-	17658860	1
17	Pince frein AV G	-	-	-	-	31652265	1
18	Couvercle pince frein BREMBO	-	-	-	Brembo	39654700	1
	Couvercle pince frein GRIMECA	-	-	-	Grimeca	31654765	1
19	Vis	-	-	-	-	98622422	2
20	Plaquettes-paire BREMBO	-	-	-	Brembo	27654610	2
	Plaquettes-paire GRIMECA	-	-	-	Grimeca	31654665	2
21	Rondelle	-	-	-	-	95100250	1
	Rondelle 8,5X18X0,8	-	-	-	-	95100251	1
22	Kit révision pince	-	-	-	-	66659310	2
	Kit révision pince BREMBO	-	-	-	-	39659000	2
23	Axes+ressort BREMBO	-	-	-	-	31659160	1
	Axes+ressort BREMBO	-	-	-	-	39659100	1
	Axes+ressort GRIMECA	-	-	-	-	31659165	1
24	Purge+capuchon BREMBO	-	-	-	-	65659200	1
	Purge+capuchon BREMBO	-	-	-	-	31659260	1
	Purge+capuchon GRIMECA	-	-	-	Grimeca	31659265	1

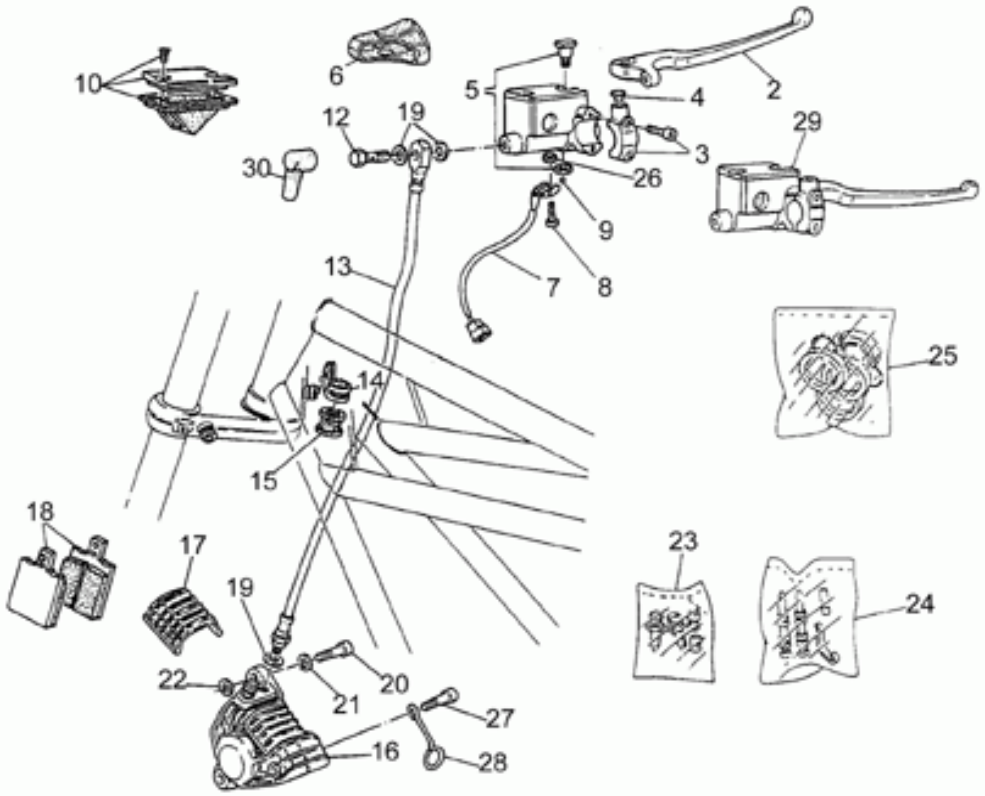

Ref.	Description	Year	I.M.	Country	Version	Code	Qty
2	Levier frein	-	-	-	-	27605615	1
3	Cavalier	-	-	-	-	27664075	1
4	Bouchon	-	-	-	-	93180080	1
5	Pivot	-	-	-	-	27604815	1
6	Capuchon	-	-	-	-	27663615	1
7	Interrupteur stop	-	-	-	-	27749815	1
8	Vis	-	-	-	-	98200214	2
9	Bille	-	-	-	-	92295708	1
10	Couvercle pompe	-	-	-	-	27661115	1
12	Vis spéciale	-	-	-	-	95990028	1
13	Tuyau flexible	-	-	-	-	27657135	1
14	Collier	-	-	-	-	17658360	1
15	Bague	-	-	-	-	17658260	1
16	Pince frein AV D	-	-	-	Grimeca	31652365	1
17	Couvercle pince frein BREMBO	-	-	-	Brembo	39654700	1
	Couvercle pince frein GRIMECA	-	-	-	Grimeca	31654765	1
18	Plaquettes-paire BREMBO	-	-	-	Brembo	27654610	1
	Plaquettes-paire GRIMECA	-	-	-	Grimeca	31654665	1
19	Joint 1mm	-	-	-	-	25656100	4
20	Vis	-	-	-	-	98622422	1
21	Rondelle élastique	-	-	-	-	61270300	2
22	Rondelle	-	-	-	-	95100250	1
	Rondelle 8,5X18X0,8	-	-	-	-	95100251	1
23	Purge+capuchon BREMBO	-	-	-	Brembo	65659200	1
	Purge+capuchon GRIMECA	-	-	-	Grimeca	31659265	1
24	Axes+ressort BREMBO	-	-	-	Brembo	39659100	1
	Axes+ressort GRIMECA	-	-	-	Grimeca	31659165	1
25	Kit révision pince BREMBO	-	-	-	Brembo	39659000	1
	Kit révision pince	-	-	-	Grimeca	66659310	1
26	Ecrou	-	-	-	-	92601002	2
27	Vis M8X25	-	-	-	-	98622425	1
28	Guide-câble	-	-	-	-	23655770	1
29	Maît. cyl. frein AV	-	-	-	-	27660115	1
30	Capuchon	-	-	-	-	39663801	1

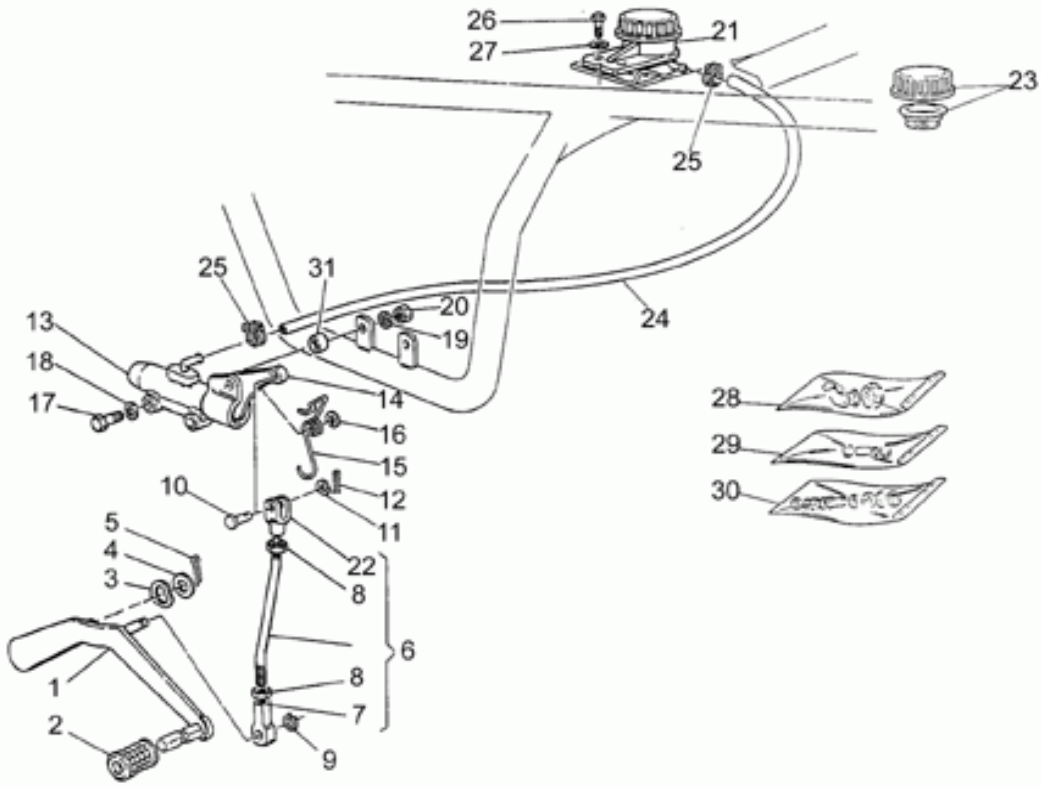

Ref.	Description	Year	I.M.	Country	Version	Code	Qty
1	Levier de frein AR	-	-	-	-	19677000	1
2	Caoutchouc	-	-	-	-	14251001	1
3	Rondelle élastique	-	-	-	-	95129260	1
4	Rondelle plate	-	-	-	-	95004215	1
5	Goupille	-	-	-	-	95500227	1
6	Tirant pour boite vitesse cpl.	-	-	-	-	19675000	1
7	Bloc	-	-	-	-	18257551	1
8	Ecrou	-	-	-	-	92690073	2
9	Bague seeger	-	-	-	-	90271008	1
10	Goupille	-	-	-	-	95770265	1
11	Rondelle	-	-	-	-	95129110	1
12	Goupille	-	-	-	-	95500222	1
13	Maît.cyl. frein AR	-	-	-	-	31666990	1
14	Levier de frein AR	-	-	-	-	19667500	1
15	Ressort man.ferin ar.	-	-	-	-	19667600	1
16	Rondelle 6,15x11x0,8	-	-	-	-	95008206	1
17	Vis	-	-	-	-	98054330	2
18	Rondelle	-	-	-	-	95000206	2
19	Rondelle évent.	-	-	-	-	95021106	2
20	Ecrou	-	-	-	-	92602206	2
21	Réserv. huile freins	-	-	-	-	65663500	1
22	Fourchette	-	-	-	-	31626860	1
23	Bouchon réservoir	-	-	-	-	17661052	1
24	Tuyau huile	-	-	-	-	00823950050	1
25	Collier	-	-	-	-	19157800	2
26	Vis M6X16	-	-	-	-	98054316	2
27	Rondelle	-	-	-	-	95000206	2
28	Gr.révision raccordde pomp	-	-	-	-	19659500	1
29	Kit révision levier	-	-	-	-	19659600	1
30	Kit révision pompe	-	-	-	-	17659350	1
31	Entretoise 7X12X5	-	-	-	-	91180705	2

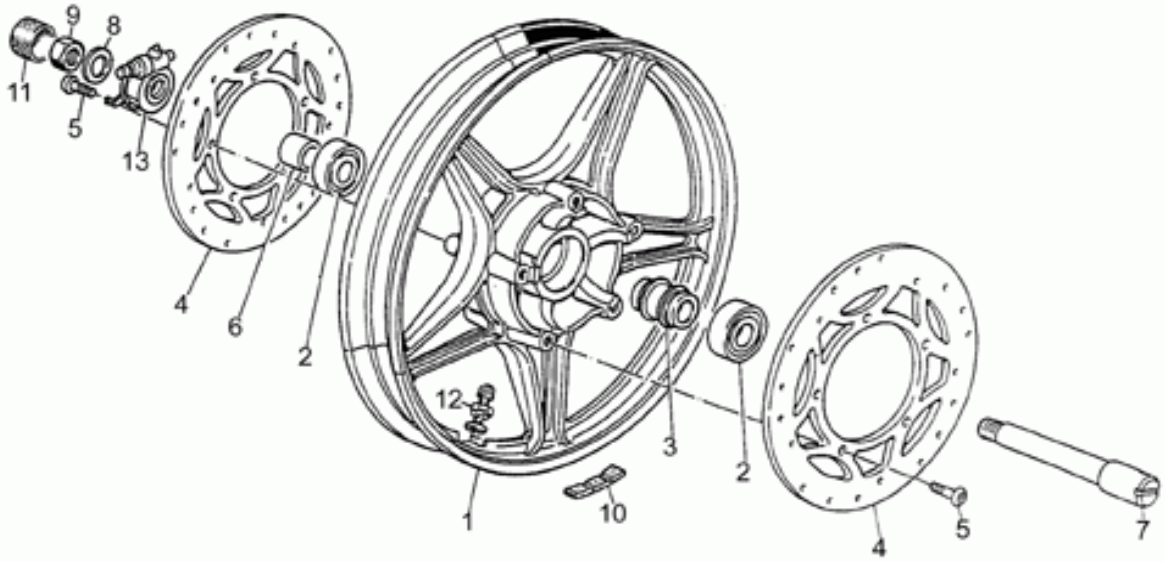

Ref.	Description	Year	I.M.	Country	Version	Code	Qty
1	Roue avant grise	-	-	-	-	14610370	1
2	Roulement	-	-	-	-	92204221	2
3	Entretoise interne roulements	-	-	-	-	17615360	1
4	Disque frein	-	-	-	-	28613300	2
5	Vis	-	-	-	-	98230825	10
6	Entretoise	-	-	-	-	31616316	1
7	Axe de roue AV	-	-	-	-	28614100	1
8	Rondelle 17X27X2	-	-	-	-	95004217	1
9	Ecrou M16X1,5	-	-	-	-	92602516	1
10	Contrepoids	-	-	-	-	14616150	1
11	Bouchon	-	-	-	-	62616800	2
12	Soupape air	-	-	-	-	28617760	1
13	Renvoi compteur km	-	-	-	-	31762561	1

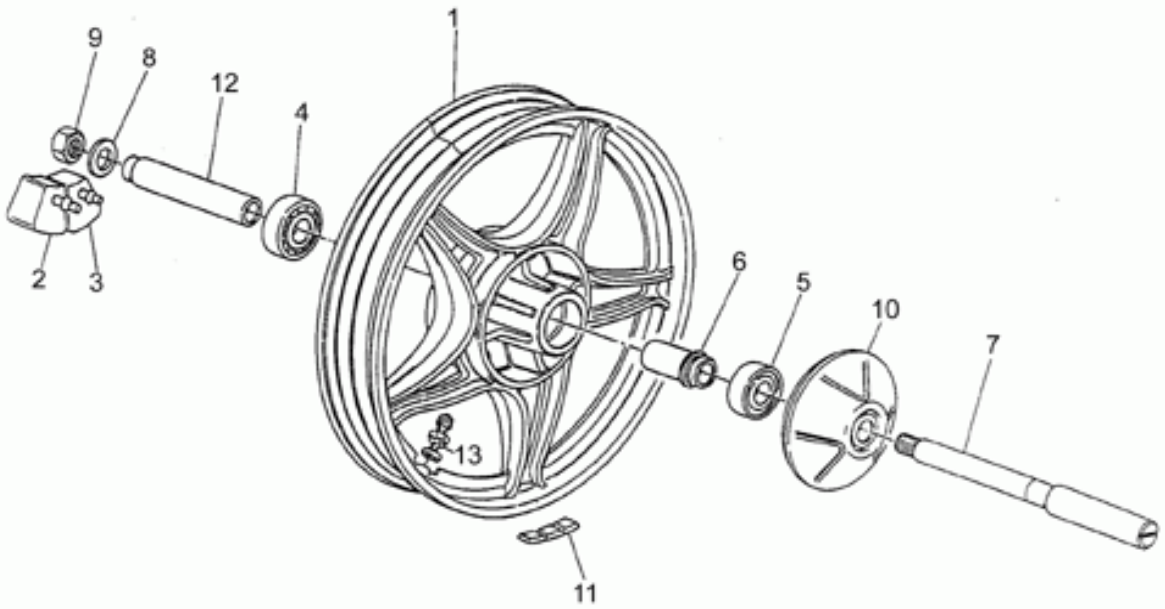

Ref.	Description	Year	I.M.	Country	Version	Code	Qty
1	Roue arrière grise	-	-	-	-	20630620	1
2	Joint en caoutchouc d.	-	-	-	-	19632501	6
3	Joint en caoutchouc g.	-	-	-	-	19632502	6
4	Roulement	-	-	-	-	92204218	1
5	Roulement	-	-	-	-	92204217	1
6	Entretoise interne roulements	-	-	-	-	19633935	1
7	Axe de roue AR	-	-	-	-	23633380	1
8	Rondelle	-	-	-	-	14634400	1
9	Ecrou	-	-	-	-	92602316	1
10	Protection	-	-	-	-	19636400	1
11	Contrepoids	-	-	-	-	14616150	1
12	Entretoise	-	-	-	-	19634100	1
13	Soupape air	-	-	-	-	28617760	1

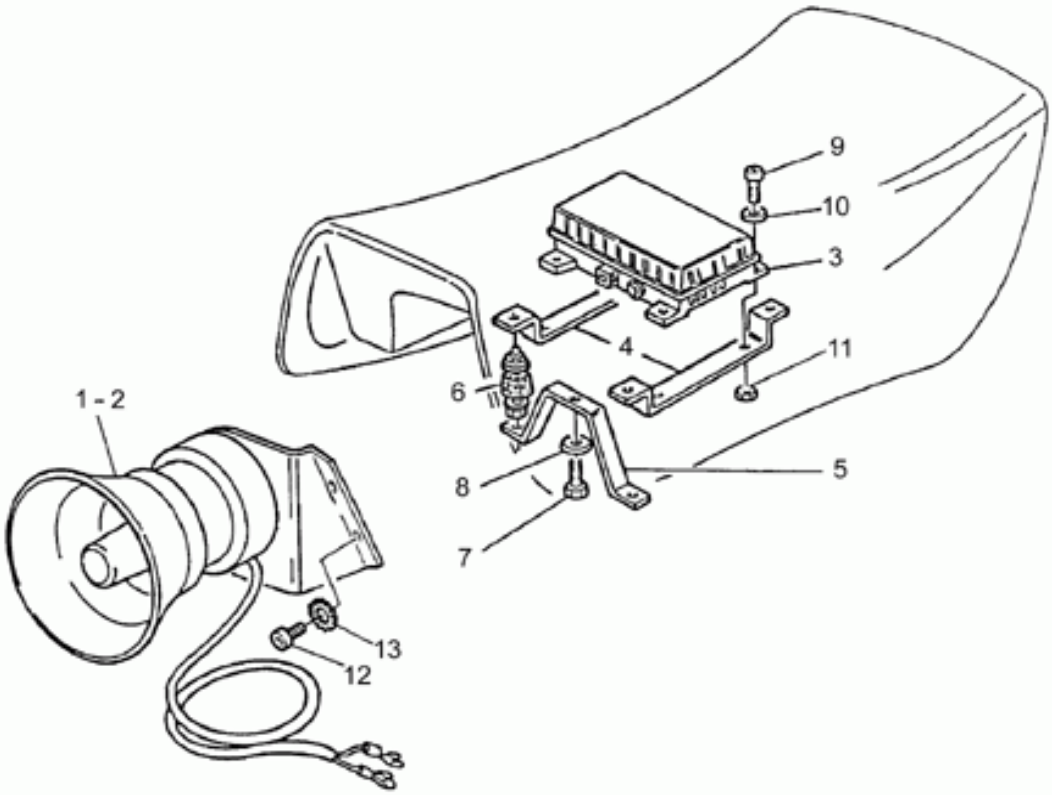

Ref.	Description	Year	I.M.	Country	Version	Code	Qty
1	RH siren cpl.	-	-	-	-	19743615	1
2	LH siren cpl.	-	-	-	-	19743616	1
3	Centrale électronique	-	-	-	-	28737680	1
4	Support	-	-	-	-	28737880	2
5	Cavalier	-	-	-	-	28736780	2
6	Silentbloc	-	-	-	-	17737983	4
7	Vis	-	-	-	-	98054212	2
8	Rondelle 5,25x14x1,5	-	-	-	-	95100059	2
9	Vis	-	-	-	-	98200412	4
10	Rondelle	-	-	-	-	95000204	4
11	Ecrou M4x0,7	-	-	-	-	92630104	4
12	Vis	-	-	-	-	98610435	4
13	Rondelle élastique	-	-	-	-	95021108	4

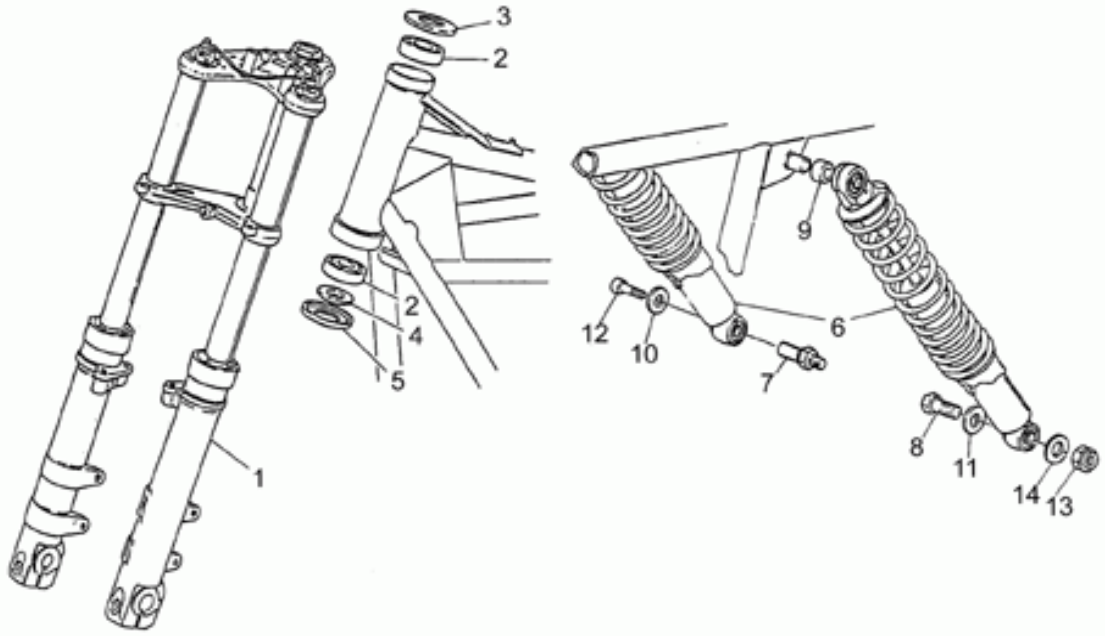

Ref.	Description	Year	I.M.	Country	Version	Code	Qty
1	Fourche avant bleue	-	-	-	-	19490215	1
	Fourche avant grise	-	-	-	-	19490225	1
2	Roulement roul.con.	-	-	-	-	92249225	2
3	Rondelle	-	-	-	-	14494600	1
4	Rondelle d'appui	-	-	-	-	14516700	1
5	Pare-poussière	-	-	-	-	14517000	1
6	Amortisseur	-	-	-	-	28550263	2
	Amortisseur BITUBO	-	-	-	-	20550220	2
7	Pivot	-	-	-	-	23555281	1
8	Pivot	-	-	-	-	23555280	1
9	Entretoise	-	-	-	-	91181407	2
10	Entretoise	-	-	-	-	95100235	1
11	Rondelle	-	-	-	-	95100256	1
12	Vis	-	-	-	-	98822416	1
13	Ecrou	-	-	-	-	92602410	1
14	Rondelle	-	-	-	-	95129180	1

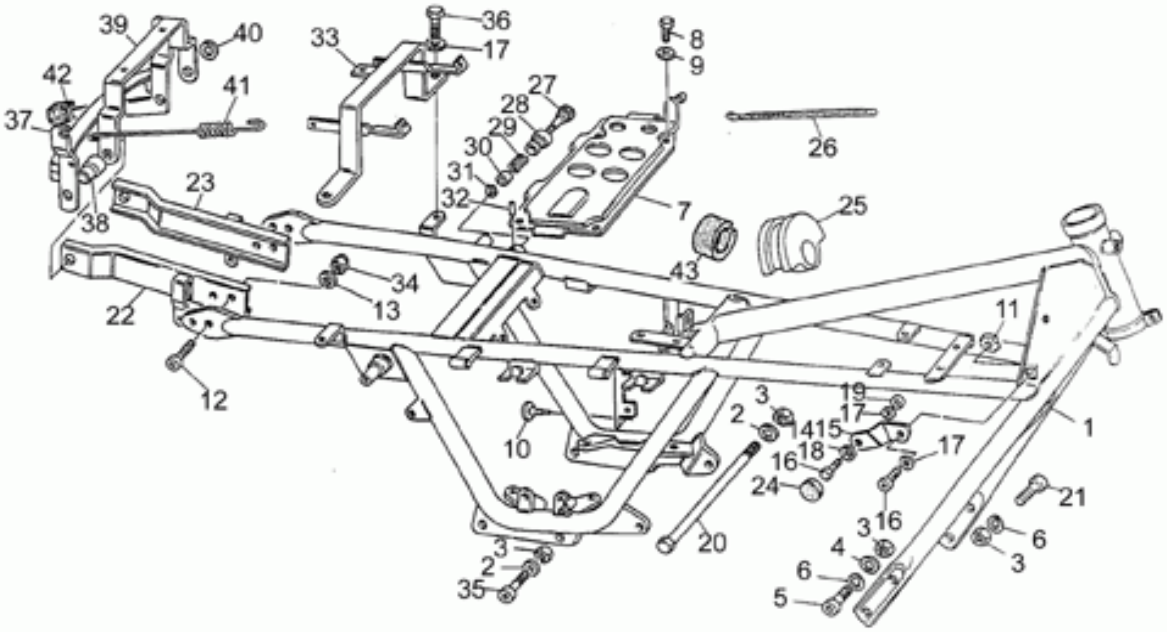

Ref.	Description	Year	I.M.	Country	Version	Code	Qty
1	Chassis	-	-	-	D	19400116	1
	Chassis	-	-	-	M	19400115	1
2	Rondelle 10,2x18x2	-	-	-	-	95004210	5
3	Ecrou	-	-	-	-	92602210	7
4	Rondelle évent.	-	-	-	-	95022110	4
5	Vis 25mm	-	-	-	-	98622525	2
6	Rondelle	-	-	-	-	95120105	4
7	Plaque	-	-	-	-	19418200	1
8	Vis	-	-	-	-	98054418	4
9	Rondelle	-	-	-	-	95004208	4
10	Tampon	-	-	-	-	19705900	4
11	Ecrou en cage	-	-	-	-	92660601	2
12	Vis M8X16	-	-	-	-	98054416	4
13	Rondelle élastique	-	-	-	-	61270300	4
14	Support droite	-	-	-	-	23401290	1
15	Support gauche	-	-	-	-	23401390	1
16	Vis M6X16	-	-	-	-	98054316	4
17	Rondelle 6,15x11x0,8	-	-	-	-	95008206	4
18	Disque	-	-	-	-	39103500	2
19	Ecrou M6x1	-	-	-	-	92630106	2
20	Pivot M10x205	-	-	-	-	98110199	1
21	Vis M10X40	-	-	-	-	98620540	2
22	Support droite	-	-	-	-	23439190	1
23	Support gauche	-	-	-	-	23439290	1
24	Tampon	-	-	-	-	39103400	2
25	Tampon	-	-	-	-	14107100	1
26	Collier	-	-	-	-	14609650	1
27	Poignée	-	-	-	-	28463045	1
28	Douille	-	-	-	-	28462945	1
29	Ressort	-	-	-	-	94321119	1
30	Entretoise	-	-	-	-	28462645	1
31	Bague de butée	-	-	-	-	90280006	1
32	Tige filetée	-	-	-	-	35782880	1
33	Support radio	-	-	-	-	28463545	1
34	Ecrou	-	-	-	-	92602208	4
35	Vis	-	-	-	-	98620555	2
36	Vis	-	-	-	-	98054318	2
37	Dispositif décrochage	-	-	-	-	23478890	1
38	Entretoise	-	-	-	-	41432100	2
39	Support radio	-	-	-	-	23463690	1
40	Entretoise	-	-	-	-	91180810	2
41	Ressort	-	-	-	-	19434000	2
42	Caoutchouc	-	-	-	-	14461400	1

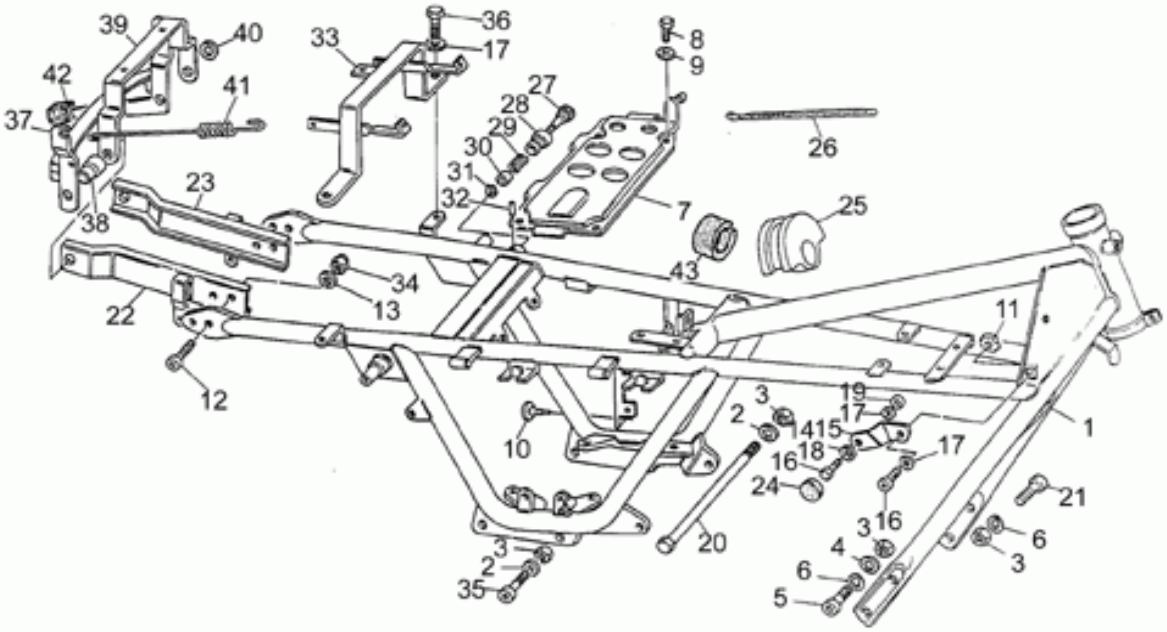

Ref.	Description	Year	I.M.	Country	Version	Code	Qty
43	Tampon	-	-	-	-	28109040	2

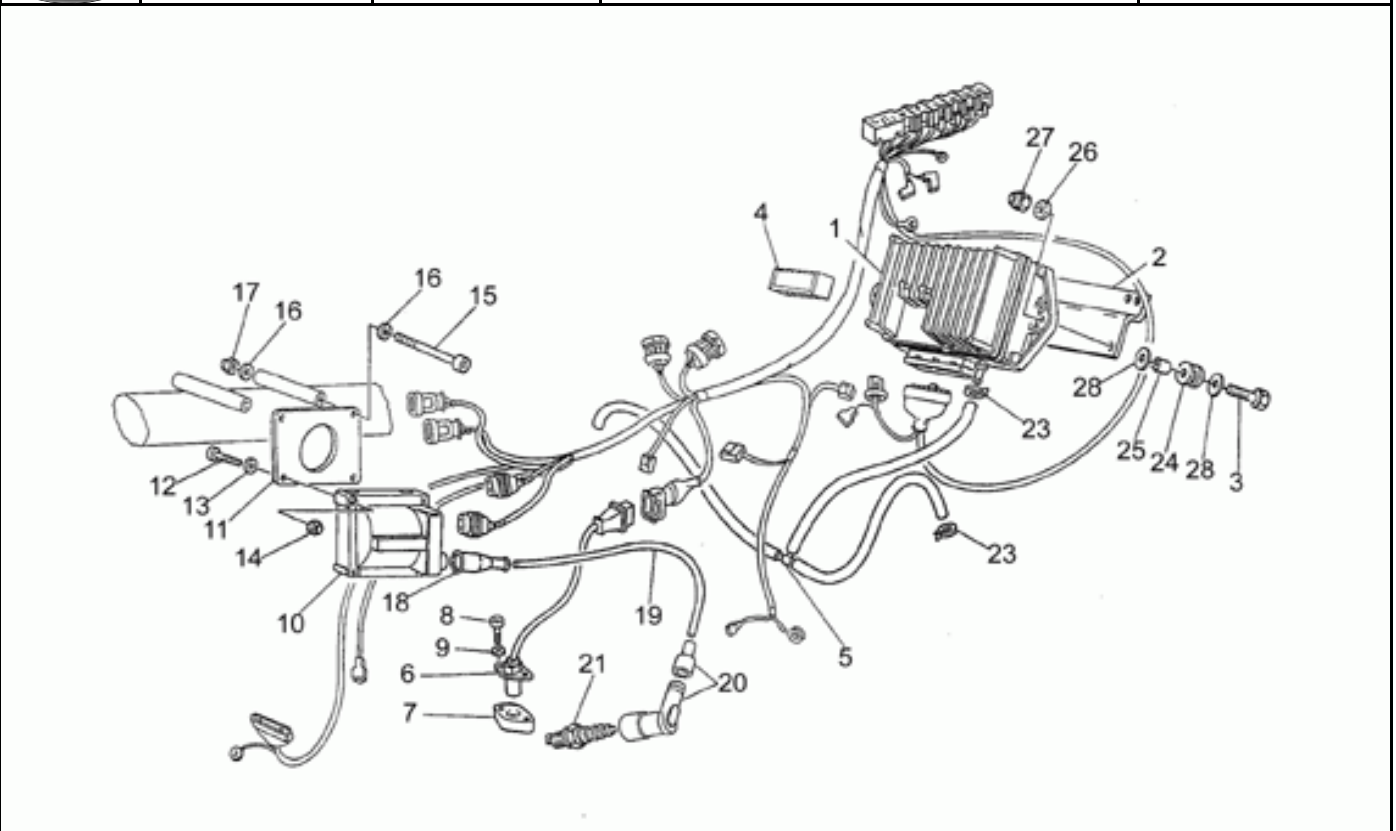

Ref.	Description	Year	I.M.	Country	Version	Code	Qty
1	Centrale MED 501A	-	-	-	-	31721465	1
2	Support	-	-	-	-	20723820	1
3	Vis	-	-	-	-	98230622	2
4	Plaquette antivibratile	-	-	-	-	19025300	2
5	Conduite doìte auxt.d'aspirat.	-	-	-	-	20108120	1
6	Capteur phase/tours	-	-	-	-	20721610	1
7	Bride	-	-	-	-	31722065	1
8	Vis	-	-	-	-	98620222	2
9	Rondelle	-	-	-	-	95004205	2
10	Bobine HT	-	-	-	-	30716500	2
11	Support bobine	-	-	-	-	20716720	2
12	Vis	-	-	-	-	98610125	4
13	Rondelle	-	-	-	-	95004204	4
14	Ecrou M4x0,7	-	-	-	-	92630104	4
15	Vis	-	-	-	-	98620360	2
16	Rondelle 6,15x11x0,8	-	-	-	-	95008206	4
17	Ecrou M6x1	-	-	-	-	92630106	2
18	Capuchon	-	-	-	-	14717600	2
19	Câble haute tension	-	-	-	-	17718350	2
20	Pipe bougie NGK	-	-	-	-	30717410	2
21	Bougie Bosch WR4CC	-	-	-	-	0000000	2
	Bougie Champion RN3C	-	-	-	-	0000000	2
	Bougie NGK BR8ES	-	-	-	-	31717061	2
23	Collier	-	-	-	-	61108500	3
24	Caoutchouc	-	-	-	-	91551080	2
25	Entretoise	-	-	-	-	91180608	2
26	Rondelle	-	-	-	-	95000206	2
27	Ecrou M6x1	-	-	-	-	92630206	2
28	Rondelle	-	-	-	-	14217901	4

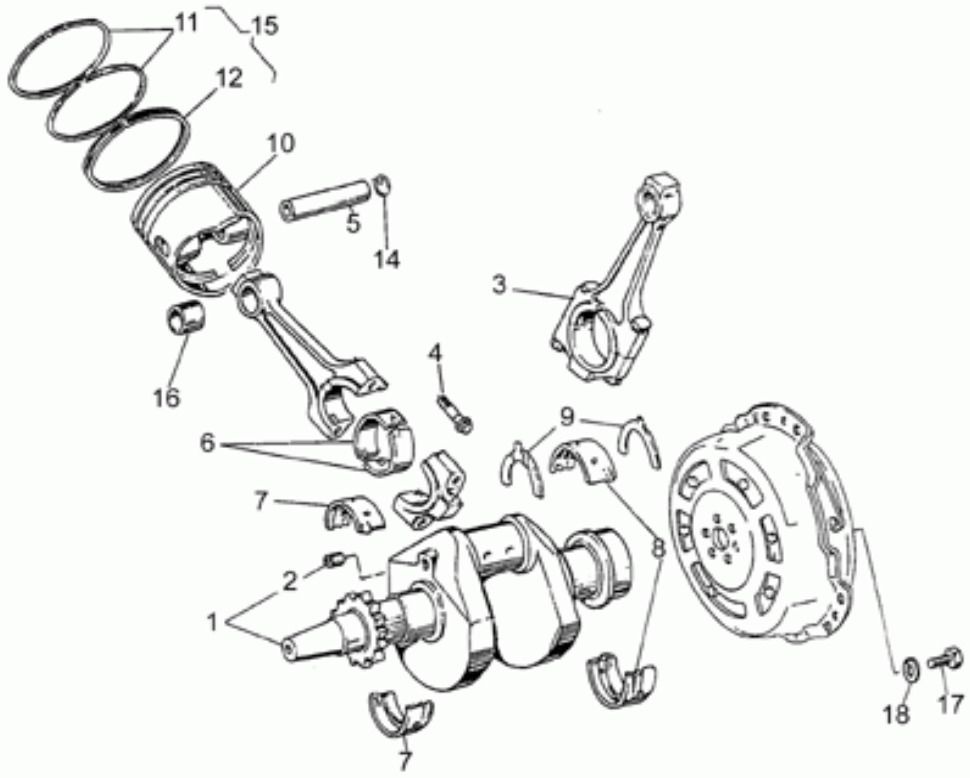

Ref.	Description	Year	I.M.	Country	Version	Code	Qty
1	Arbre moteur cpl.	-	-	-	-	19064121	1
2	Bouchon	-	-	-	-	19065400	1
3	Bielle	-	-	-	-	19061521	2
4	Vis	-	-	-	-	19062221	4
5	Axe	-	-	-	-	19061220	2
6	Demi-coussinet	-	-	-	-	19062022	4
7	Demi-couss.de vilebr.av.	-	-	-	-	19065623	2
8	Demi-couss.de vilebr.ar.	-	-	-	-	19066522	2
9	Butée	-	-	-	-	31066480	2
10	Piston	-	-	-	-	19060421	2
11	Segment d'étanchéité	-	-	-	-	19060700	4
12	Segment d'étanchéité	-	-	-	-	19061000	2
14	Bague de butée	-	-	-	-	19061320	4
15	Ensemble de segments	-	-	-	-	19060600	2
16	Bague	-	-	-	-	19061821	2
17	Vis	-	-	-	-	19067700	6
18	Rondelle	-	-	-	-	14615901	6

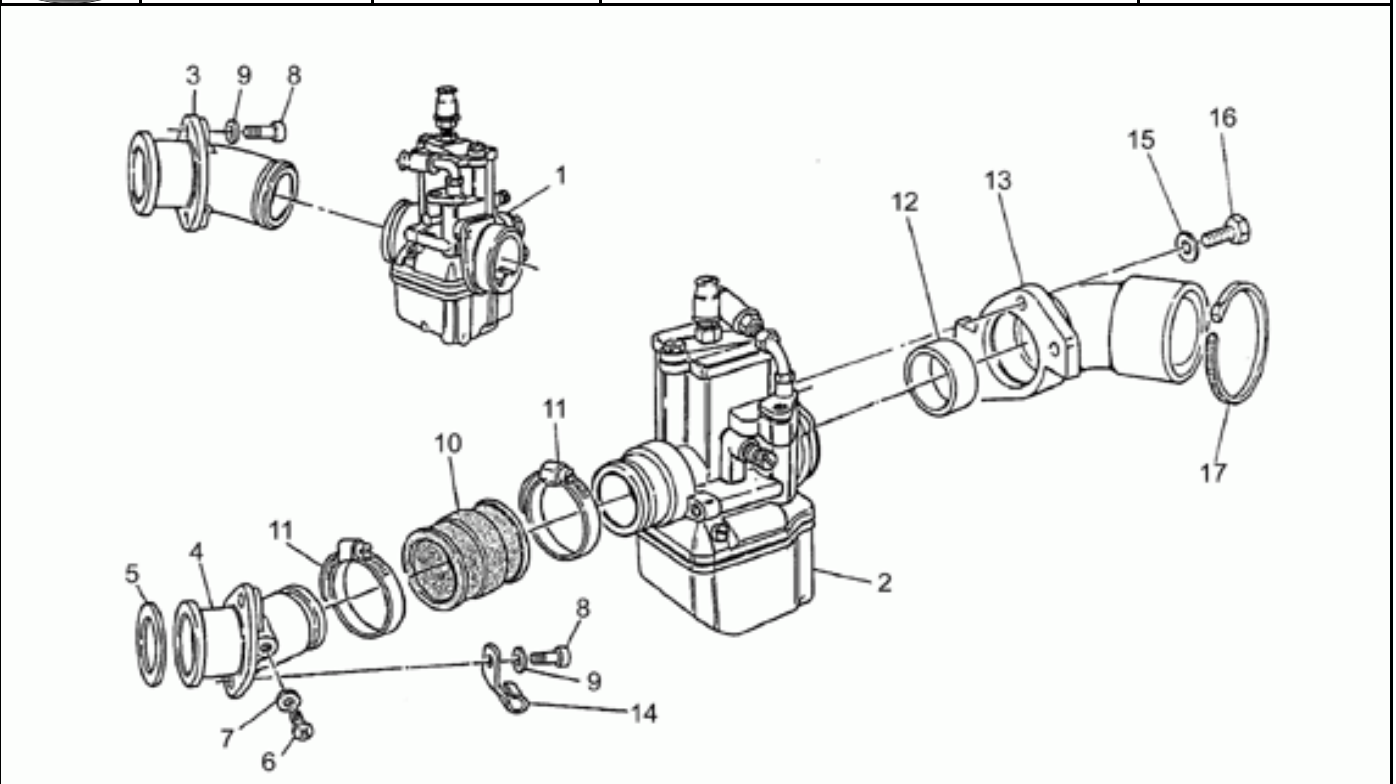

Ref.	Description	Year	I.M.	Country	Version	Code	Qty
1	Carburateur droit VHBZ 20FD	-	-	-	T1	19112615	1
	Carburateur droit PHBH 28BD	-	-	-	T2	19112618	1
2	Carburateur gauche VHBZ 20FS	-	-	-	T1	19112616	1
	Carburateur gauche PHBH 28BS	-	-	-	T2	19112617	1
3	Pipe d.	-	-	-	D	31115082	1
	Pipe d.	-	-	-	T1	19115035	1
	Pipe d.	-	-	-	T2	31115082	1
4	Pipe g.	-	-	-	D	31115083	1
	Pipe g.	-	-	-	T1	19115036	1
	Pipe g.	-	-	-	T2	31115083	1
5	Joint	-	-	-	-	19115520	2
6	Vis	-	-	-	-	98310610	2
7	Rondelle	-	-	-	-	95100116	2
8	Vis	-	-	-	-	98822325	4
9	Rondelle spéciale	-	-	-	-	61013800	4
10	Manchon	-	-	-	T1	19114320	2
	Manchon	-	-	-	T2	31114380	2
11	Collier 32X52X8	-	-	-	T1	93305032	4
	Collier	-	-	-	T2	93505031	4
12	Bague d'étanchéité	-	-	-	T1	90706315	2
	Bague d'étanchéité	-	-	-	T2	31114383	2
13	Collecteur	-	-	-	T1	19114400	2
	Collecteur	-	-	-	T2	19114480	2
14	Collier	-	-	-	-	19718000	2
15	Rondelle	-	-	-	-	95004205	4
16	Vis	-	-	-	T1	98054214	4
	Vis	-	-	-	T2	98054220	4
17	Collier	-	-	-	-	14609650	2

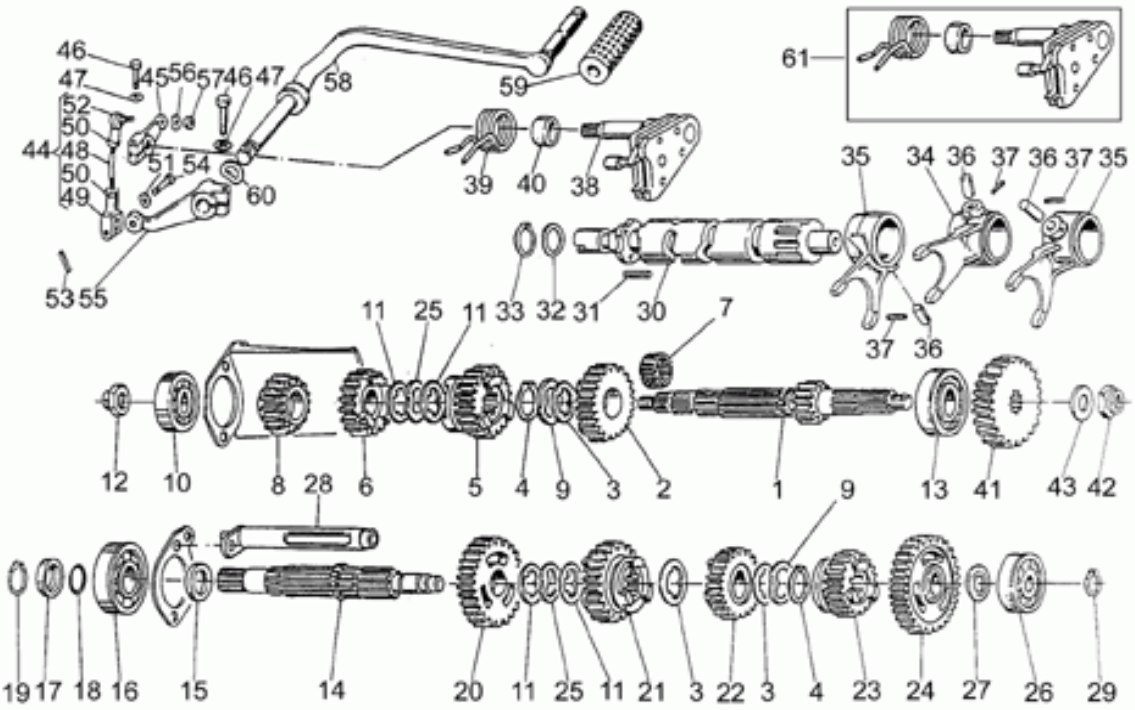

Ref.	Description	Year	I.M.	Country	Version	Code	Qty
1	Arbre primaire Z=11	-	-	-	-	23210570	1
2	Engrenage 5a AP Z=20	-	-	-	-	23212070	1
3	Rondelle éventail	-	-	-	-	19215460	3
4	Bague seeger	-	-	-	-	90271127	2
5	Engrenage 4a AP Z=18	-	-	-	-	19211861	1
6	Engrenage 3a AP Z=18	-	-	-	-	19211460	1
7	Cage à rouleaux	-	-	-	-	92251023	1
8	Engrenage 2a AP Z=14	-	-	-	C3	19211361	1
	Engrenage 2a AP Z=14	-	-	-	C4	23211372	1
9	Rondelle	-	-	-	-	19218062	2
10	Roulement AP	-	-	-	-	92218417	1
11	Rondelle d'appui	-	-	-	-	19214660	4
12	Ecrou	-	-	-	-	10054100	1
13	Roulement AP	-	-	-	-	92230320	1
14	Arbre secondaire	-	-	-	-	19213661	1
15	Entretoise	-	-	-	-	19212900	1
16	Roulement AS	-	-	-	-	92201220	1
17	Entretoise	-	-	-	-	19213720	1
18	Bague d'étanchéité 18,77X1,78	-	-	-	-	90706188	1
19	Bague seeger	-	-	-	-	90271121	1
20	Engrenage 2a AS Z=23	-	-	-	C3	23214571	1
	Engrenage 2a AS Z=23	-	-	-	C4	23214572	1
21	Engrenage 3a AS Z=23	-	-	-	-	19214860	1
22	Engrenage 4a AS Z=19	-	-	-	-	19215161	1
23	Engrenage 5a AS Z=18	-	-	-	-	23215270	1
24	Engrenage 1a AS Z=26	-	-	-	-	23214071	1
25	Rondelle	-	-	-	-	19218061	2
26	Roulement	-	-	-	-	92234716	1
27	Cale 1,7 mm	-	-	-	-	10214301	1
	Cale 1,8 mm	-	-	-	-	10214302	1
	Cale 1,9 mm	-	-	-	-	10214303	1
	Cale 2,1 mm	-	-	-	-	10214305	1
	Rondelle 2 mm	-	-	-	-	10214304	1
28	Egouttoir	-	-	-	-	23202074	1
29	Bague seeger	-	-	-	-	90271117	1
30	Desmodromique	-	-	-	-	19234420	1
31	Tige	-	-	-	-	19234600	4
32	Cale 1 mm	-	-	-	-	19355300	1
33	Anneau élastique	-	-	-	-	90271020	1
34	Fourchette AP	-	-	-	-	19231220	1
35	Fourchette AS	-	-	-	-	19231020	2
36	Rouleau	-	-	-	-	92297909	3
37	Goupille	-	-	-	-	95520316	3

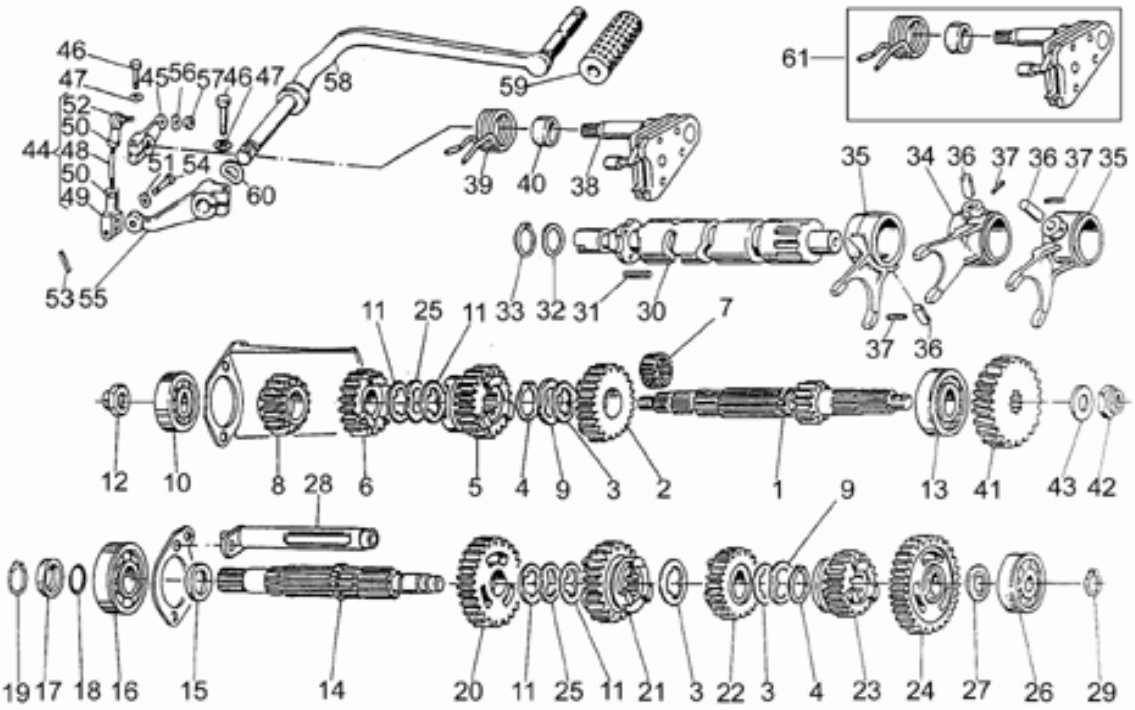

Ref.	Description	Year	I.M.	Country	Version	Code	Qty
38	Preselecteur complet	-	-	-	C1	20236220	1
39	Ressort	-	-	-	C1	61238200	1
	Ressort	-	-	-	C2	28238261	1
40	Bague	-	-	-	C1	91182010	1
	Entretoise	-	-	-	C2	20208520	1
41	Pignon interméd. Z=25	-	-	-	-	27211111	1
42	Ecrou	-	-	-	-	10054100	1
43	Rondelle d'appui	-	-	-	-	39238100	1
44	Tirant pour boite vitesse cpl.	-	-	-	-	19257701	1
45	Levier de commande	-	-	-	-	19258220	1
46	Vis	-	-	-	-	98052325	2
47	Rondelle évent.	-	-	-	-	95021106	2
48	Tirant	-	-	-	-	18257950	1
49	Fourchette	-	-	-	-	12626800	1
50	Ecrou	-	-	-	-	92602206	2
51	Rondelle	-	-	-	-	95129110	1
52	Rotule	-	-	-	-	18258101	1
53	Goupille	-	-	-	-	95500222	1
54	Goupille	-	-	-	-	95770265	1
55	Levier	-	-	-	-	19256920	1
56	Rondelle spéciale	-	-	-	-	61013800	1
57	Ecrou M6x1	-	-	-	-	92630106	1
58	Levier commande vitesses cpl.	-	-	-	-	19250900	1
59	Caoutchouc	-	-	-	-	14251001	1
60	Rondelle élastique	-	-	-	-	95129260	1
61	Kit présélecteur	-	-	-	-	20999520	1
	Preselecteur complet	-	-	-	C2	20236220	1

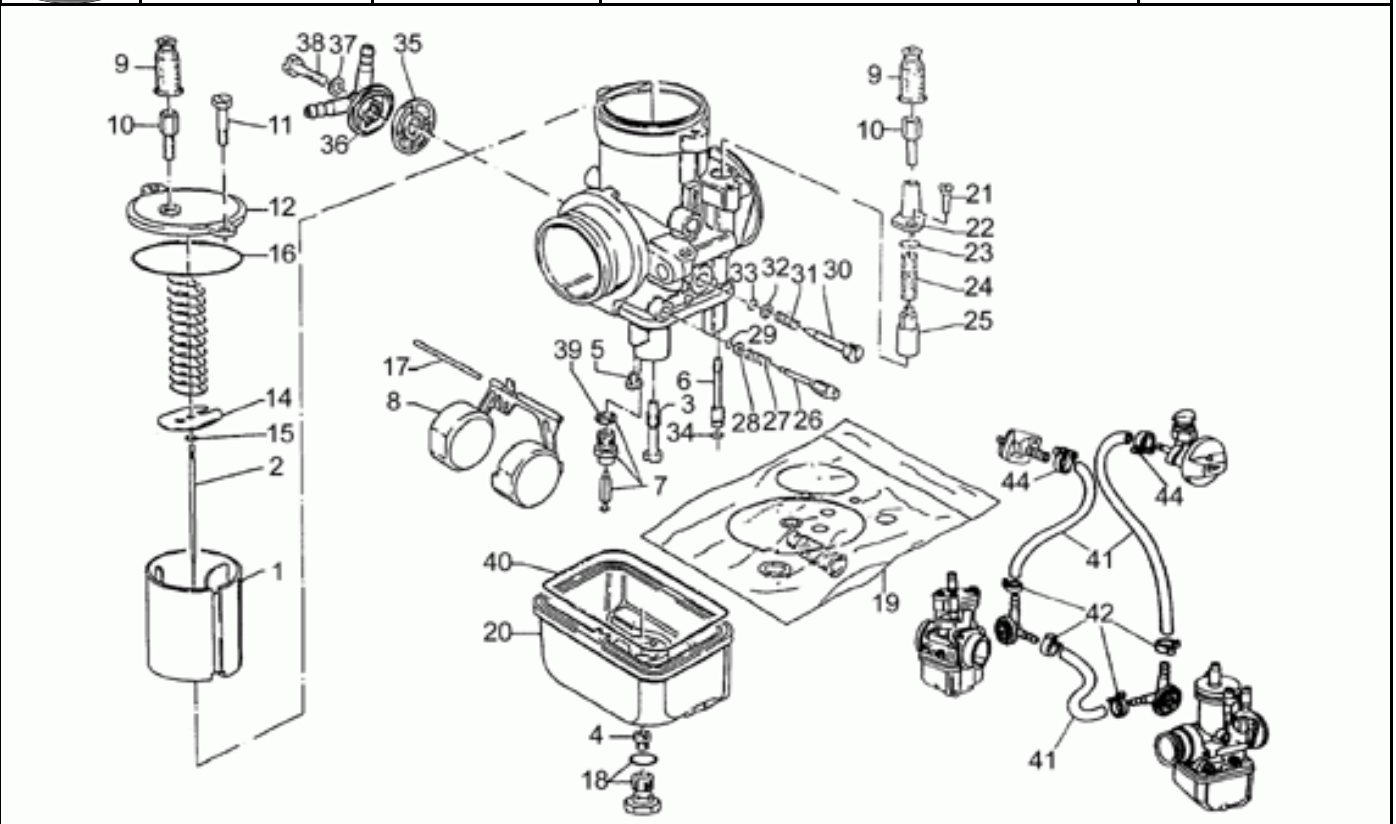

Ref.	Description	Year	I.M.	Country	Version	Code	Qty
1	Soupape gaz 30	-	-	-	-	27934820	2
2	Pointeau conique X57	-	-	-	-	31937780	2
3	Gicleur 262H	-	-	-	-	27935521	2
4	Jet maximum 108	-	-	-	-	66935710	2
5	Gicleur minimum 45	-	-	-	-	13935900	2
6	Jet démarrage 60	-	-	-	-	19936000	2
7	Vanne pointeau	-	-	-	-	19934600	2
8	Flotteur gr.9,5	-	-	-	-	27934315	2
9	Jeu de joints	-	-	-	-	19939980	4
10	Vis tendeur de fil	-	-	-	-	12937200	4
11	Vis	-	-	-	-	14934650	2
12	Couvercle	-	-	-	-	19935080	2
14	Plaquette	-	-	-	-	19938580	2
15	Agrafe pointeau conique	-	-	-	-	65933600	2
16	Jeu de joints	-	-	-	-	19939980	2
17	Axe flotteur	-	-	-	-	13933100	2
18	Bouchon fix.bac	-	-	-	-	27933720	2
19	Jeu de joints	-	-	-	-	19939980	1
20	Cuve aluminium	-	-	-	-	19934480	2
	Cuve plastica	-	-	-	-	31934460	2
21	Vis	-	-	-	-	13937900	2
22	Couvercle dispositif dém.	-	-	-	-	17937450	2
23	Jeu de joints	-	-	-	-	19939980	2
24	Ressort de soupape	-	-	-	-	39937600	2
25	Soupape de démarrage	-	-	-	-	13937800	2
26	Vis réglage minimum	-	-	-	-	13936200	2
27	Ressort	-	-	-	-	13936300	2
28	Rondelle plate	-	-	-	-	65933700	2
29	Jeu de joints	-	-	-	-	19939980	2
30	Vis réglage soupape gaz	-	-	-	-	13936600	2
31	Ressort	-	-	-	-	13936700	2
32	Rondelle plate	-	-	-	-	14931650	2
33	Jeu de joints	-	-	-	-	19939980	2
34	Jeu de joints	-	-	-	-	19939980	2
35	Filtre essence	-	-	-	-	43934000	2
36	Pipette racc. tuyau essence	-	-	-	-	31934680	2
37	Joint vis	-	-	-	-	13934700	2
38	Vis fix.pipette	-	-	-	-	10934900	2
39	Jeu de joints	-	-	-	-	19939980	2
40	Jeu de joints	-	-	-	-	19939980	2
41	Tuyau essence	-	-	-	-	008239560800	1
42	Collier	-	-	-	-	28157950	4
44	Collier	-	-	-	-	28108410	2

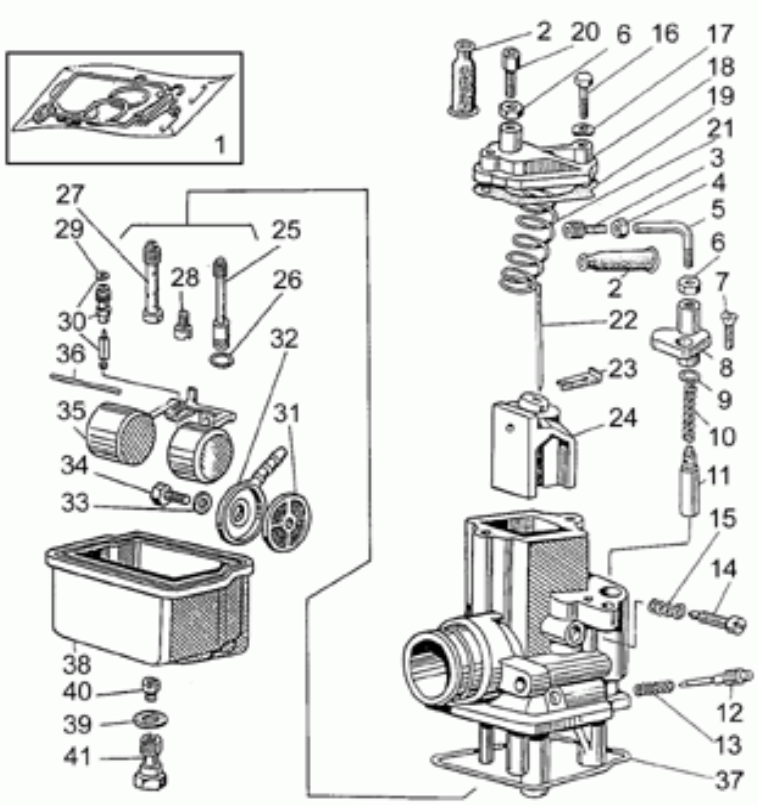

Ref.	Description	Year	I.M.	Country	Version	Code	Qty
1	Sachet joints	-	-	-	-	39939900	2
2	Capuchon	-	-	-	-	39939900	4
3	Vis tendeur de fil	-	-	-	-	53937200	2
4	Ecrou	-	-	-	-	19938880	2
5	Tuyau	-	-	-	-	49938900	2
6	Ecrou	-	-	-	-	12937300	4
7	Vis	-	-	-	-	13937900	2
8	Couvercle dispositif dém.	-	-	-	-	17937450	2
9	Joint	-	-	-	-	39939900	2
10	Ressort de soupape	-	-	-	-	39937600	2
11	Soupape de démarrage	-	-	-	-	13937800	2
12	Vis réglage minimum	-	-	-	-	13936200	2
13	Ressort	-	-	-	-	13936300	2
14	Vis réglage soupape gaz	-	-	-	-	13936600	2
15	Ressort	-	-	-	-	13936700	2
16	Vis	-	-	-	-	13932800	4
17	Rondelle	-	-	-	-	13932900	4
18	Couvercle soupape	-	-	-	-	53935000	2
19	Joint	-	-	-	-	39939900	2
20	Vis tendeur de fil	-	-	-	-	12937200	2
21	Ressort rappel soup.gaz	-	-	-	-	53937100	2
22	Pointeau conique E25/2a	-	-	-	-	19937715	2
23	Agrafe pointeau conique	-	-	-	-	55938585	2
24	Soupape gaz 40	-	-	-	-	61934800	2
25	Jet démarrage 60	-	-	-	-	19936000	2
26	Joint	-	-	-	-	39939900	2
27	Gicleur 260AH	-	-	-	-	19935500	2
28	Gicleur minimum 38	-	-	-	-	27935960	2
29	Joint	-	-	-	-	39939900	2
30	Vanne pointeau	-	-	-	-	19934600	2
31	Filtre essence	-	-	-	-	43934000	2
32	Pipette racc. tuyau essence	-	-	-	-	13934600	2
33	Joint	-	-	-	-	39939900	2
34	Vis fix.pipette	-	-	-	-	10934900	2
35	Flotteur	-	-	-	-	61934300	2
36	Axe flotteur	-	-	-	-	13933100	2
37	Joint	-	-	-	-	39939900	2
38	Cuve	-	-	-	-	10934400	2
39	Joint bouchon	-	-	-	-	39939900	2
40	Jet maximum 98	-	-	-	-	39935701	2
41	Bouchon avec OR	-	-	-	-	10933700	2

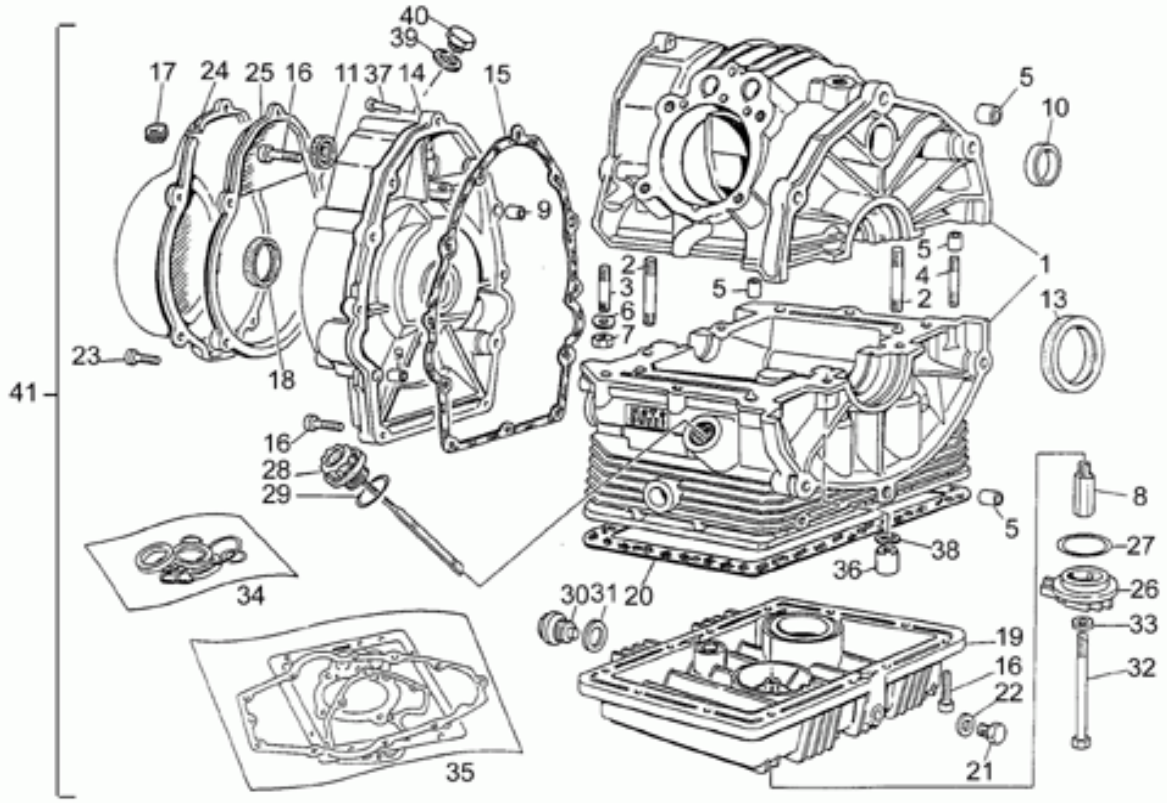

Ref.	Description	Year	I.M.	Country	Version	Code	Qty
1	Carter moteur brut	-	-	-	-	19000120	1
	Carter moteur grise	-	-	-	-	31000380	1
2	Vis sans tête	-	-	-	-	96451560	4
3	Vis sans tête	-	-	-	-	96451430	4
4	Vis sans tête	-	-	-	-	96508055	2
5	Bague	-	-	-	-	19015020	4
6	Rondelle élastique	-	-	-	-	61270300	6
7	Ecrou	-	-	-	-	92602208	6
8	Raccord	-	-	-	-	19003800	1
9	Bague	-	-	-	-	19002020	2
10	Bouchon	-	-	-	-	19016320	1
11	Bague d'étanchéité	-	-	-	-	90401530	1
13	Bague d'étanchéité	-	-	-	-	90405367	1
	Bague d'étanchéité	-	-	-	-	04000500	1
14	Couvercle distribution brut	-	-	-	-	19001420	1
	Couvercle gris	-	-	-	-	31001480	1
15	Joint	-	-	-	-	19001200	1
16	Vis M6X25	-	-	-	-	98622325	22
17	Caoutchouc	-	-	-	-	19007700	1
18	Bague d'étanchéité	-	-	-	-	90402840	1
19	Carter inférieur gris	-	-	-	-	20003520	1
	Carter inférieur gris	-	-	-	-	20003510	1
20	Joint	-	-	-	-	19003602	1
21	Bouchon vid.huile	-	-	-	-	31003766	1
22	Garniture	-	-	-	-	10528900	1
23	Vis M6X35	-	-	-	-	98620335	5
24	Couvercle	-	-	-	-	27001636	1
25	Bride	-	-	-	-	27001136	1
26	Couvercle brut	-	-	-	-	19003400	1
	Petit couvercle gris	-	-	-	-	20003410	1
27	Joint torique	-	-	-	-	90706444	1
28	Bouchon rempl. huile	-	-	-	-	27004985	1
29	Bague d'étanchéité	-	-	-	-	90706282	1
30	Bouchon vid.huile	-	-	-	-	12003702	1
	Bouchon vid.huile	-	-	-	-	31003766	1
31	Joint	-	-	-	-	95100709	1
32	Boulon	-	-	-	-	27152885	1
33	Joint	-	-	-	-	12154200	1
34	Joint spy-série	-	-	-	-	31999565	1
35	Joints moteur-série	-	-	-	-	19999021	1
36	Ecrou colonne	-	-	-	-	13021900	4
37	Vis M6X30	-	-	-	-	98620330	2
38	Rondelle	-	-	-	-	95129180	4

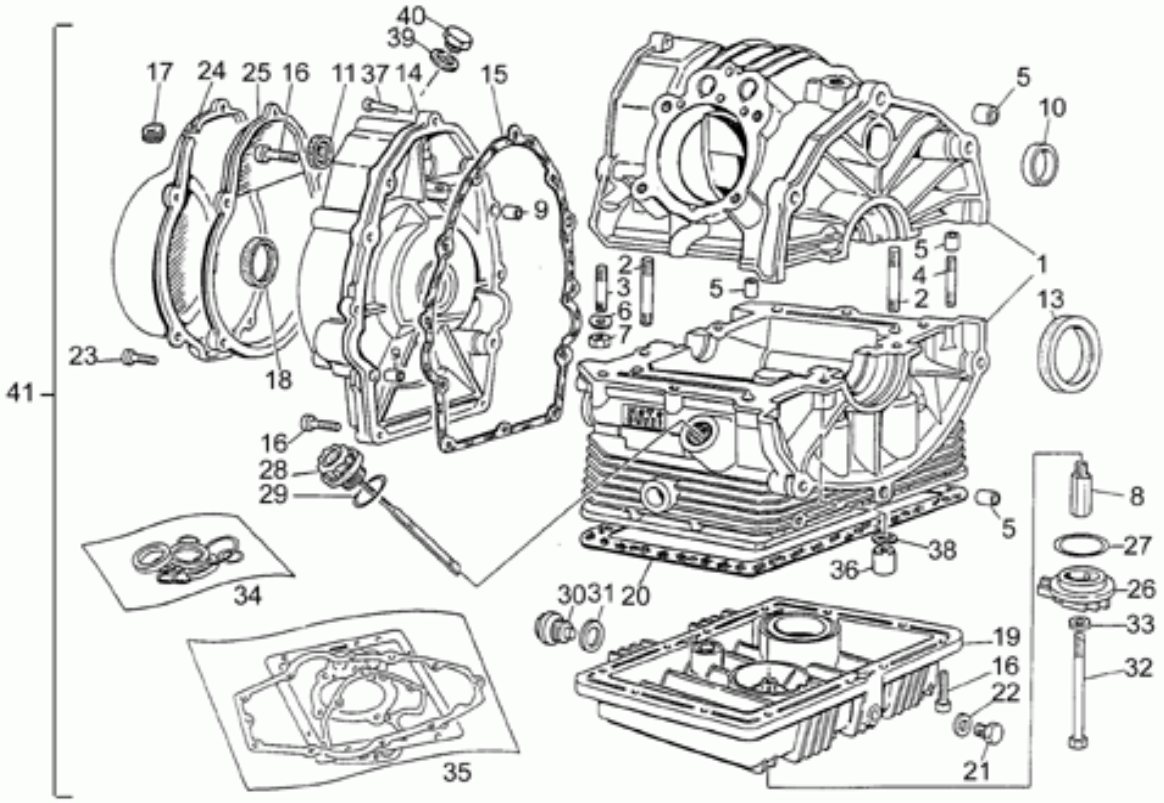

Ref.	Description	Year	I.M.	Country	Version	Code	Qty
39	Joint	-	-	-	-	10154200	1
40	Bouchon	-	-	-	-	95980119	1
41	Moteur sans boîte vit. brut	-	-	-	D	27991037	1
	Moteur sans boîte vit. brut	-	-	-	D	27991036	1
	Moteur sans boîte vit. brut	-	-	-	M	27991035	1

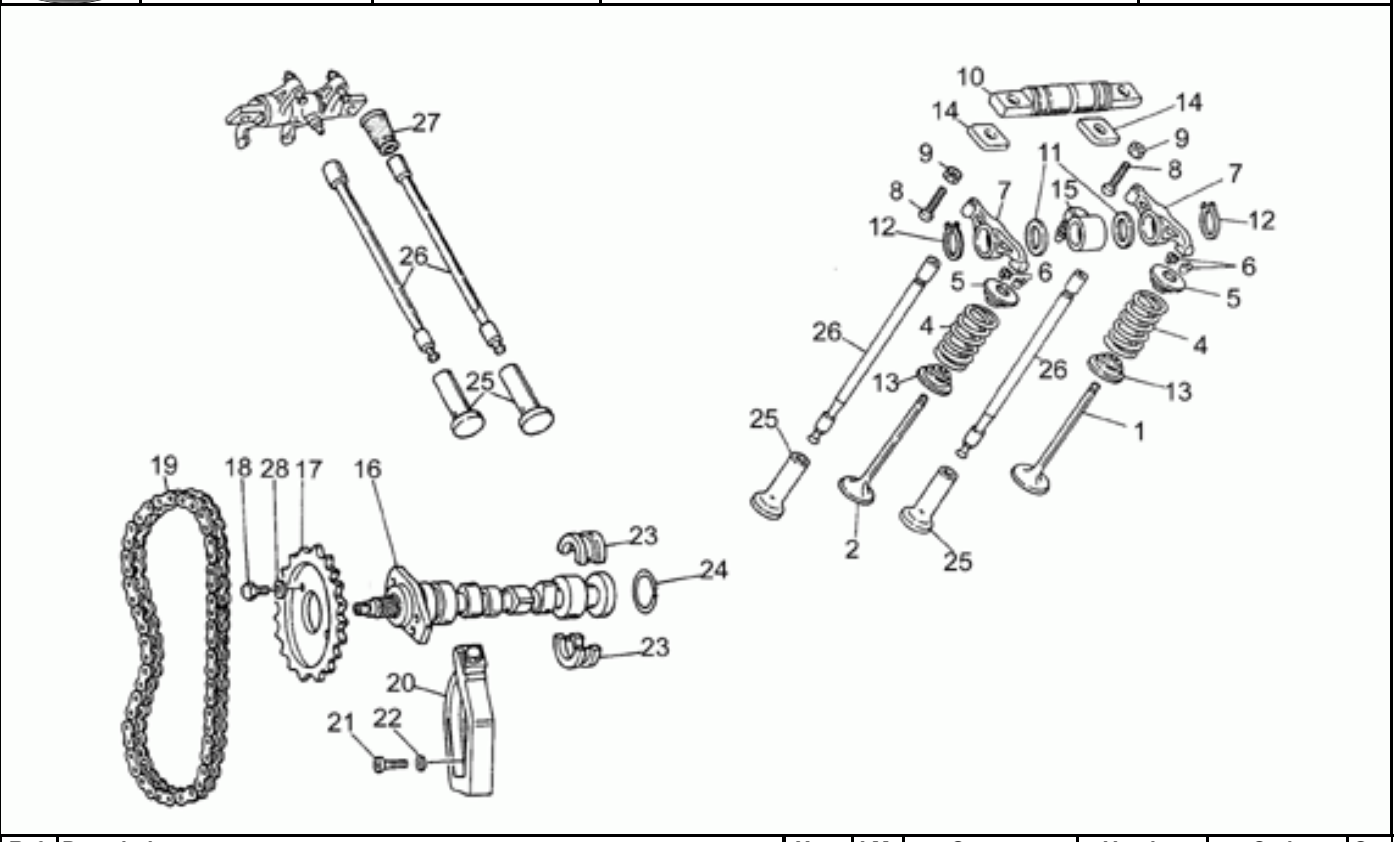

Ref.	Description	Year	I.M.	Country	Version	Code	Qty
1	Soupape d'admission	-	-	-	-	19036021	2
2	Soupape d'échappement	-	-	-	-	23036100	2
4	Ressort	-	-	-	-	27037521	4
5	Coupelle supérieur	-	-	-	-	31038015	4
6	Demi-clavette	-	-	-	-	61038100	8
7	Culbuteur	-	-	-	-	19030500	4
8	Vis	-	-	-	-	19034000	4
9	Ecrou M6x1	-	-	-	-	92602406	4
10	Axe culbuteur	-	-	-	-	19032000	2
11	Rondelle d'appui	-	-	-	-	19032300	4
12	Bague seeger	-	-	-	-	90271018	4
13	Coupelle inférieure	-	-	-	-	31037015	4
14	Cale	-	-	-	-	19032980	4
15	Manchon	-	-	-	-	19027500	2
16	Arbre à cames	-	-	-	-	27053463	1
17	Engrenage distribution	-	-	-	-	19054521	1
18	Boulon	-	-	-	-	61054900	2
19	Chaîne de distribution	-	-	-	-	19058021	1
20	Tendeur de chaine	-	-	-	-	19058220	1
21	Vis	-	-	-	-	98822316	1
22	Rondelle	-	-	-	-	95129115	1
23	Secteur	-	-	-	-	19055700	2
24	Anneau élastique	-	-	-	-	90353029	1
25	Poussoir	-	-	-	-	19045861	4
26	Culbuteur tige	-	-	-	-	19045020	4
27	Capuchon	-	-	-	-	27045420	4
28	Rondelle de séreté	-	-	-	-	23217800	2

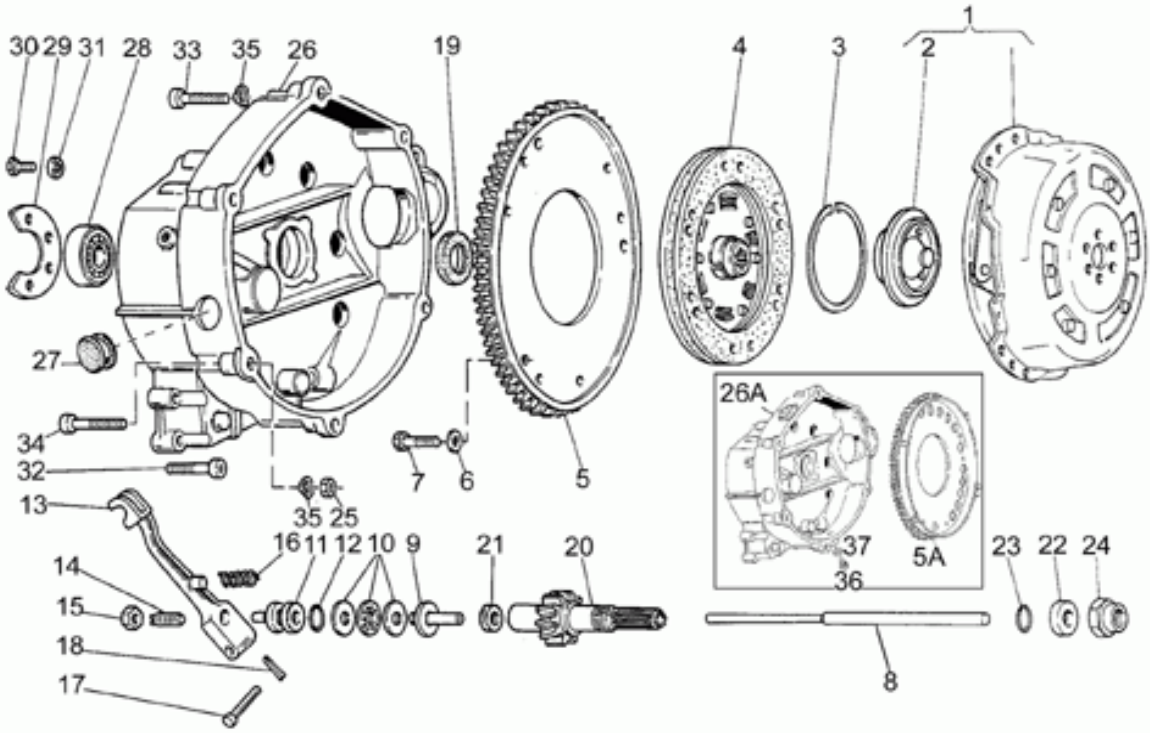

Ref.	Description	Year	I.M.	Country	Version	Code	Qty
1	Commande embrayage	-	-	-	-	19080161	1
2	Cuvette	-	-	-	-	19083462	1
3	Anneau élastique	-	-	-	-	90272075	1
4	Disque embrayage mené	-	-	-	-	27084460	1
5	Couronne	-	-	-	D	31067980	1
	Couronne MOTOPLAT	-	-	-	M	19067900	1
6	Rondelle	-	-	-	-	14217901	6
7	Vis M6X16	-	-	-	-	98054316	6
8	Tige	-	-	-	-	20085720	1
9	Corps intérieur	-	-	-	-	14086000	1
10	Palier poussée	-	-	-	-	12087001	1
11	Corps extérieur	-	-	-	-	14086100	1
12	Joint torique	-	-	-	-	90706170	1
13	Débrayage	-	-	-	-	14090201	1
14	Vis embrayage	-	-	-	-	14090400	1
15	Ecrou M8X1	-	-	-	-	92602508	1
16	Retour levier démarrage	-	-	-	-	94321105	1
17	Goupille	-	-	-	-	95780271	1
18	Goupille	-	-	-	-	95500222	1
19	Bague d'étanchéité	-	-	-	-	90403245	1
20	Arbre trnsmission z=12	-	-	-	-	19210715	1
21	Bague d'étanchéité	-	-	-	-	90400616	1
22	Entretoise	-	-	-	-	19213760	1
23	Joint torique	-	-	-	-	90706235	1
24	Ecrou	-	-	-	-	19356760	1
25	Ecrou	-	-	-	-	92602208	1
26	Cloche embrayage DIGIPLEX	-	-	-	D	31200480	1
	Cloche embrayage DIGIPLEX	-	-	-	D	31200464	1
	Cloche embrayage MOTOPLAT	-	-	-	M	19200463	1
27	Bouchon	-	-	-	-	93180220	1
28	Roulement 25x52x15	-	-	-	-	92201225	1
29	Plaque fixation palier	-	-	-	-	19203460	1
30	Vis	-	-	-	-	98054314	3
31	Rondelle	-	-	-	-	14217901	3
32	Vis M6X30	-	-	-	-	98620330	11
33	Vis M8X35	-	-	-	-	98620435	5
34	Vis	-	-	-	-	98620450	1
35	Rondelle élastique	-	-	-	-	61270300	6
36	Bouchon vid.huile	-	-	-	D	31003766	1
37	Rondelle 10,2x18x2	-	-	-	D	95004210	1

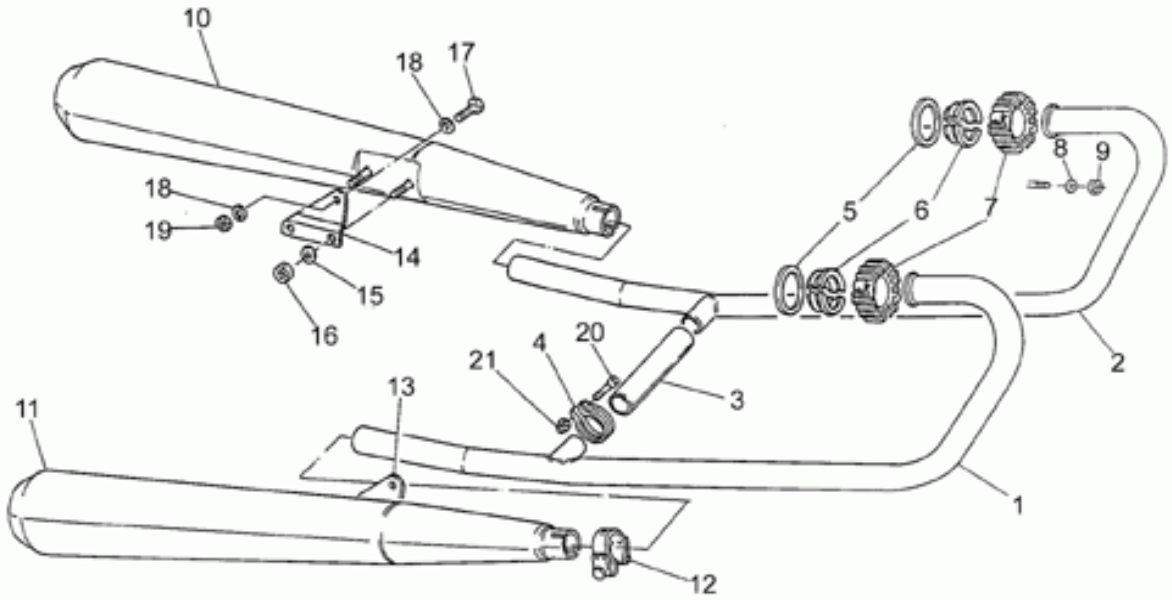

Ref.	Description	Year	I.M.	Country	Version	Code	Qty
1	Tuyau échappement d.	-	-	-	-	19120707	1
2	Tuyau échappement gche	-	-	-	-	19120706	1
3	Tuyau d'échappement	-	-	-	-	19121135	1
4	Collier	-	-	-	-	61126920	2
5	Joint	-	-	-	-	19025280	2
6	Entretoise	-	-	-	-	19025460	4
7	Bague échappement	-	-	-	-	19121050	2
8	Rondelle spéciale	-	-	-	-	61013800	4
9	Ecrou	-	-	-	-	92701062	4
10	Silencieux G	-	-	-	-	19122936	1
11	Silencieux D	-	-	-	-	19123036	1
12	Collier	-	-	-	-	19123435	2
13	Plaque d.	-	-	-	-	19128660	1
14	Plaque g.	-	-	-	-	19128760	1
15	Rondelle élastique	-	-	-	-	61270300	4
16	Ecrou	-	-	-	-	92602208	4
17	Vis M10X35	-	-	-	-	98054535	2
18	Rondelle évent.	-	-	-	-	95022110	2
19	Ecrou	-	-	-	-	92602410	2
20	Vis	-	-	-	-	61127520	2
21	Bague	-	-	-	-	61127220	2

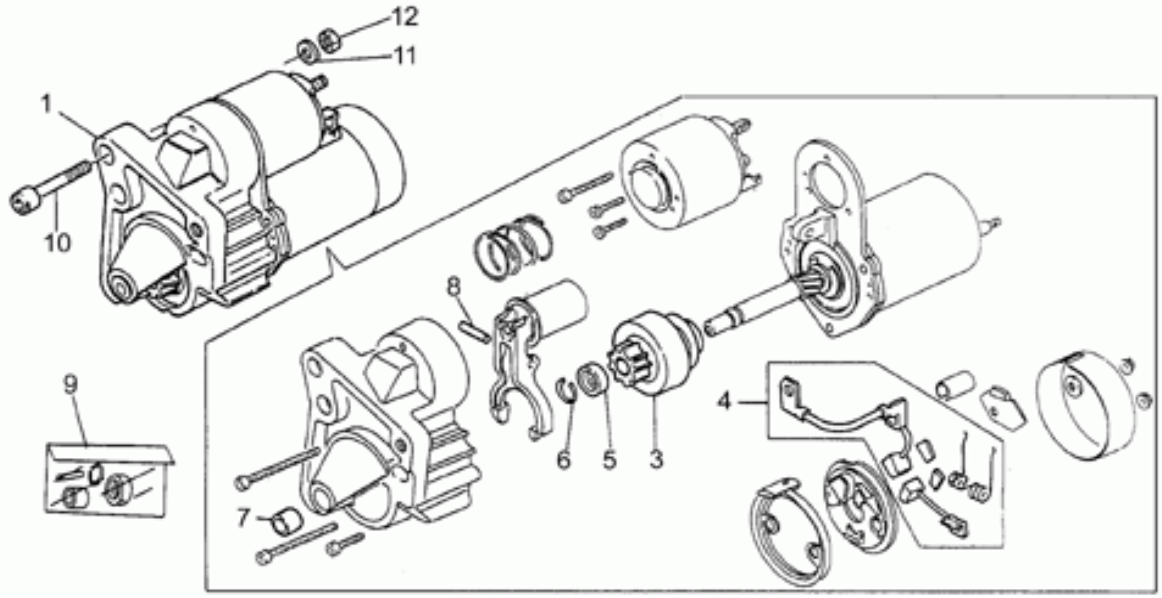

Ref.	Description	Year	I.M.	Country	Version	Code	Qty
1	Démarreur	-	-	-	-	30730711	1
3	Pignon compléte	-	-	-	-	30530510	1
4	Kit de révision brosse	-	-	-	-	30530511	1
5	Kit rév. démarreur	-	-	-	-	30530512	1
6	Kit rév. démarreur	-	-	-	-	30530512	1
7	Kit rév. démarreur	-	-	-	-	30530512	1
8	Kit rév. démarreur	-	-	-	-	30530512	1
9	Kit rév. démarreur	-	-	-	-	30530512	1
10	Vis M8X35	-	-	-	-	98620435	2
11	Rondelle	-	-	-	-	95004208	2
12	Ecrou	-	-	-	-	92602208	2

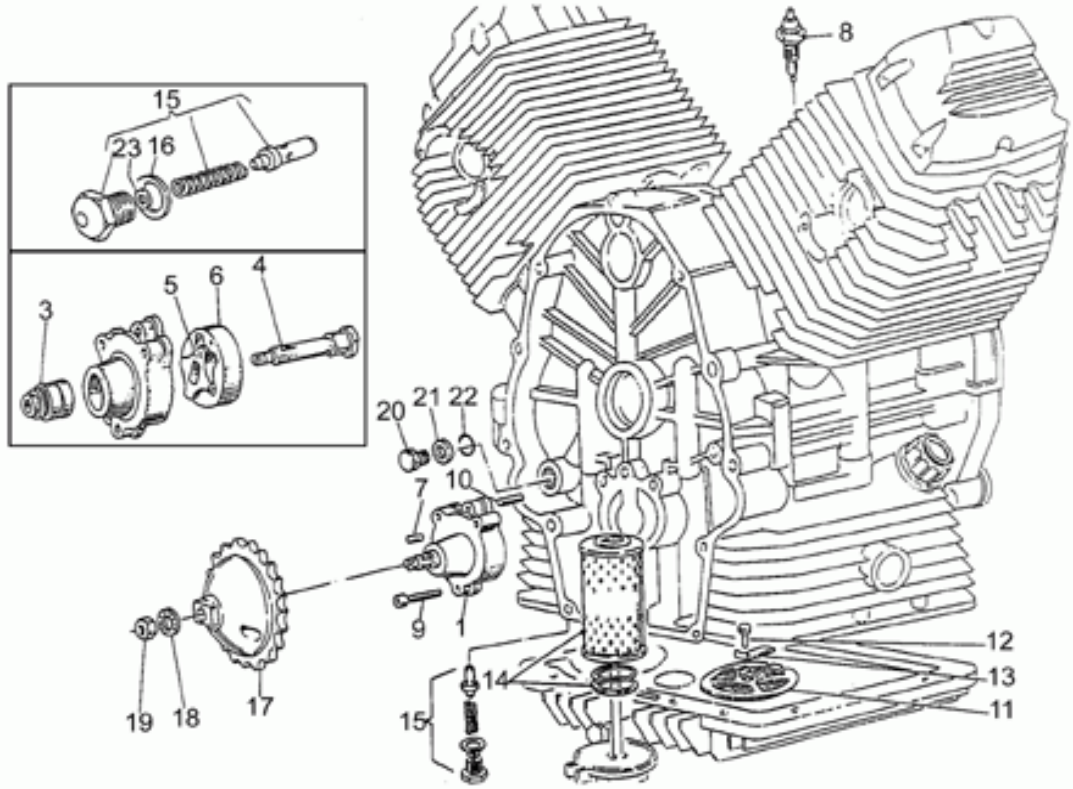

Ref.	Description	Year	I.M.	Country	Version	Code	Qty
1	Pompe huile	-	-	-	M3	19146420	1
	Pompe huile	-	-	-	M4	19146422	1
3	Roulement à rouleaux	-	-	-	-	92252210	1
4	Arbre pompe huile	-	-	-	M3	19147820	1
	Arbre pompe huile	-	-	-	M4	20147810	1
5	Rotor intérieur	-	-	-	M3	19148420	1
	Rotor intérieur	-	-	-	M4	20148410	1
6	Rotor extérieur	-	-	-	M4	20148610	1
7	Rouleau guide	-	-	-	M3	92296726	1
	Rouleau	-	-	-	M4	92296723	1
8	Bulbe pression huile	-	-	-	-	31999581	1
9	Vis M6X35	-	-	-	-	98620335	3
10	Goupille	-	-	-	-	19018920	2
11	Filtre à huile	-	-	-	-	19152200	1
12	Vis	-	-	-	-	98054314	1
13	Plaquette	-	-	-	-	95187006	1
14	Filtre à huile	-	-	-	M1	19153000	1
	Filtre à huile	-	-	-	M2	27153085	1
15	Oil pressure valve	-	-	-	-	31158250	1
16	Rondelle	-	-	-	-	18144350	3
17	Engrenage pompe huile	-	-	-	-	19147721	1
18	Rondelle	-	-	-	-	19149800	1
19	Ecrou	-	-	-	-	92602510	1
20	Bouchon	-	-	-	-	31016050	1
21	Garniture	-	-	-	-	18161150	1
22	Joint torique	-	-	-	-	90706111	1
23	Rondelle 6,15x11x0,8	-	-	-	-	95008206	1

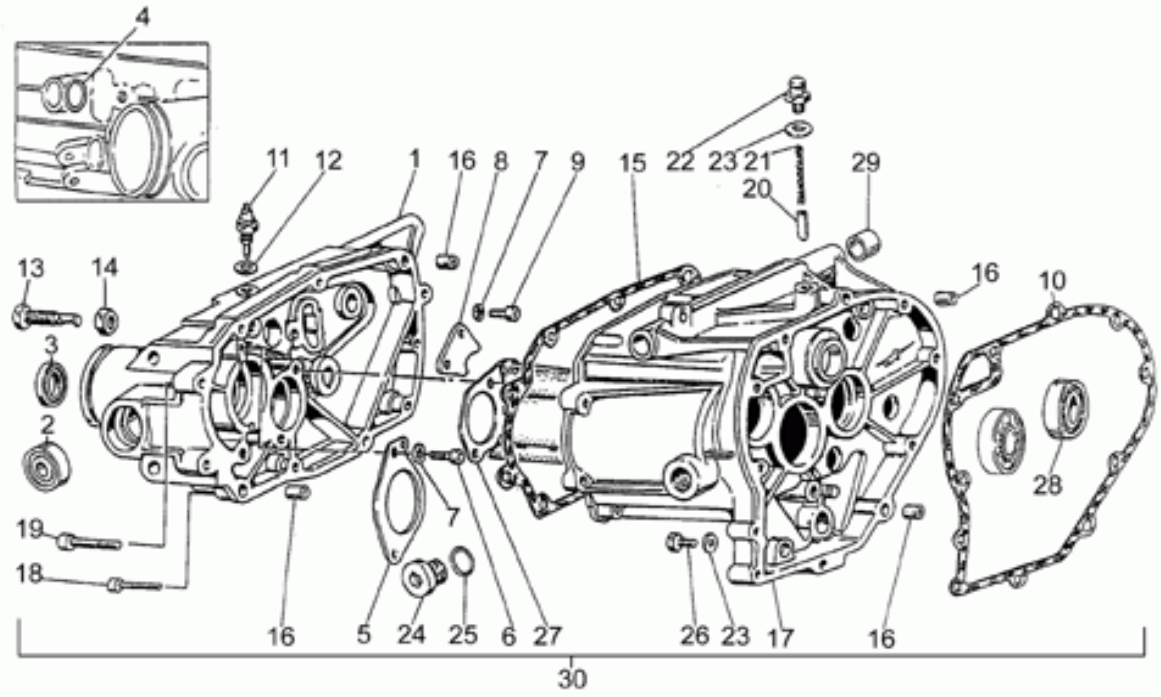

Ref.	Description	Year	I.M.	Country	Version	Code	Qty
1	Couvercle boîte vit. brut	-	-	-	-	19200862	1
	Couvercle boîte vit. gris	-	-	-	-	31200880	1
2	Roulement	-	-	-	-	92204215	2
3	Bague d'étanchéité	-	-	-	-	90402841	1
4	Joint torique	-	-	-	C3	90706140	1
5	Plaque	-	-	-	C3	23213870	1
	Plaque	-	-	-	C4	23213872	1
6	Vis	-	-	-	-	98622314	4
7	Rondelle	-	-	-	-	14217901	6
8	Plaque	-	-	-	C3	19235800	1
	Huile cloison	-	-	-	C4	23208272	1
9	Vis	-	-	-	-	98622314	2
10	Joint	-	-	-	-	23200370	1
11	Capteur	-	-	-	-	19207220	1
12	Joint	-	-	-	-	12154200	1
13	Vis	-	-	-	-	19237800	1
14	Ecrou bas M12x1,25	-	-	-	-	92602512	1
15	Joint	-	-	-	-	19201120	1
16	Bague	-	-	-	-	19002020	4
17	Boîte de vitesses brute	-	-	-	-	19200262	1
	Carter de boîte vitesses	-	-	-	-	31200280	1
18	Vis M6X30	-	-	-	-	98620330	7
19	Vis M8X35	-	-	-	-	98620435	4
20	Encliquetage	-	-	-	-	55234700	1
21	Ressort	-	-	-	-	94321067	1
22	Bouchon purge	-	-	-	-	19206501	1
23	Garniture	-	-	-	-	10528900	2
24	Bouchon huile	-	-	-	-	12022600	1
25	Joint torique 20,24x2,62	-	-	-	-	90706203	1
26	Bouchon vid.huile	-	-	-	-	31003766	1
27	Huile cloison	-	-	-	-	19208220	1
28	Roulement	-	-	-	-	92201120	1
29	Bague	-	-	-	-	19202320	2
30	Boîte de v.cpl.et cloche brute	-	-	-	D	19991517	1
	Boîte de v.cpl.et cloche grise	-	-	-	D	19991517	1
	Boîte de v.cpl.et cloche brute	-	-	-	M	19991515	1

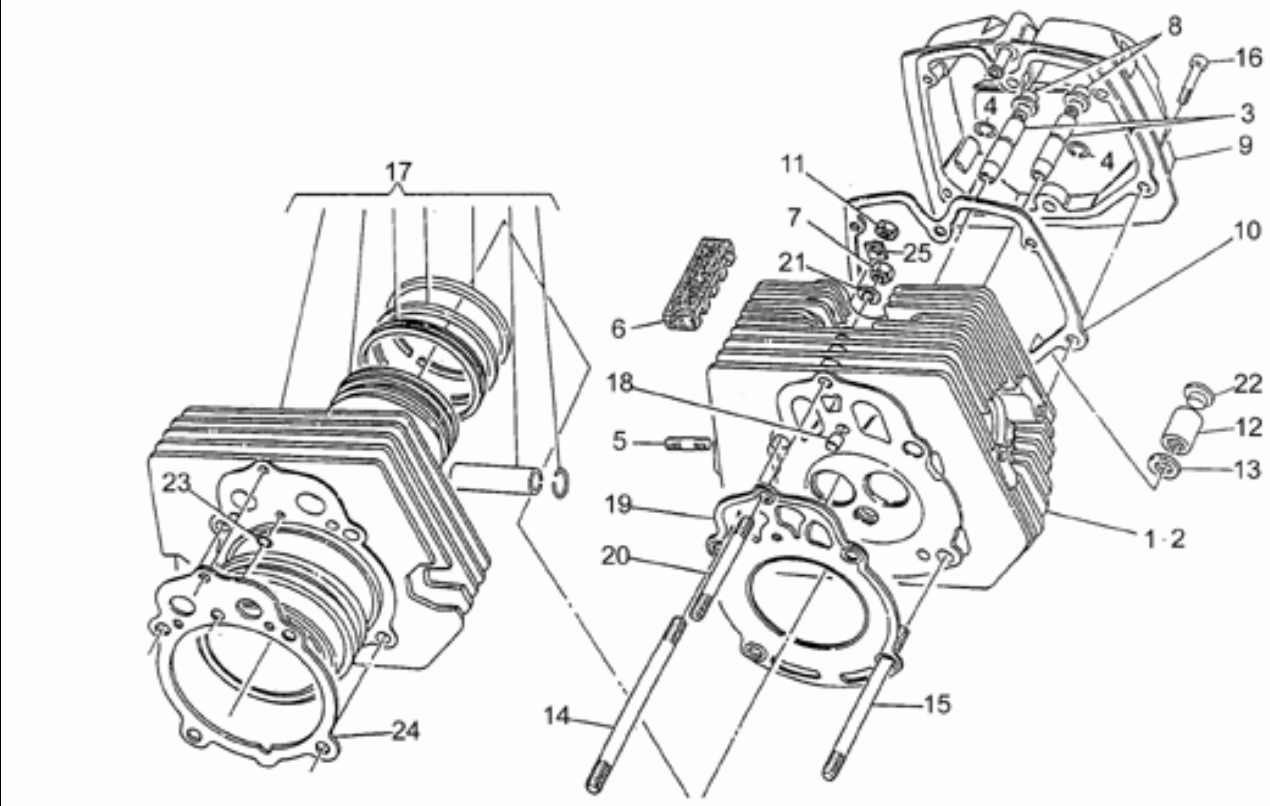

Ref.	Description	Year	I.M.	Country	Version	Code	Qty
1	Culasse d.	-	-	-	-	19022120	1
	Culasse d.gris	-	-	-	-	31022180	1
2	Culasse g.	-	-	-	-	19022220	1
	Culasse g.gris	-	-	-	-	31022280	1
3	Guide soupape	-	-	-	-	61036801	4
4	Anneau élastique	-	-	-	-	90353009	4
5	Vis sans tête	-	-	-	-	96506042	4
6	Plaquette antivibratile	-	-	-	-	19025300	4
7	Ecrou	-	-	-	-	19021920	2
8	Bouchon	-	-	-	-	19037820	4
9	Couvercle soupapes	-	-	-	-	19023520	2
	Couvercle soupapes	-	-	-	-	31023500	2
10	Joint	-	-	-	-	19023700	2
11	Ecrou	-	-	-	-	92603010	4
12	Ecrou colonne	-	-	-	-	13021900	4
13	Rondelle	-	-	-	-	95129180	4
14	Vis sans tête	-	-	-	-	96510182	4
15	Vis sans tête 125mm	-	-	-	M5	96510125	4
	Vis sans tête 145mm	-	-	-	M6	96510145	4
16	Vis M6X25	-	-	-	-	98622325	12
17	Cylindre av.piston	-	-	-	-	19060121	2
	Cylindre av.piston	-	-	-	-	19060122	2
18	Bague	-	-	-	-	19021320	2
19	Joint tête	-	-	-	-	27022020	2
20	Vis sans tête	-	-	-	-	96508107	2
21	Rondelle élastique	-	-	-	-	61270300	2
22	Bouchon	-	-	-	-	93180245	4
23	Joint torique	-	-	-	-	61027200	2
24	Joint	-	-	-	-	27020820	2
25	Cale	-	-	-	-	19032980	4

Tables

Table	Description
01	BATTERIE
02	SIDE CASES
03	CARROSSERIE AV. - CARÈNE
04	CARROSSERIE
05	COUPLE CONIQUE
06	TABLEAU DE BORD
07	PHARE AVANT-KLAXON
08	FEU ARRIÈRE
09	FILTRE AIR
10	FOURCHE AV.
11	FOURCHE ARRIERE
12	CIRCUIT ELECTRIQUE
13	SYS.FREIN AVANT D.
14	SYS.FREIN AVANT G.
15	LAMPE STROBO
16	GUIDON - COMMANDES
17	GARDE-BOUE - ACCESS.
18	REPOSE-PIEDS BEQUILLE
19	PINCE FREIN
20	ROUE AV.
21	ROUE ARRIÈRE
22	SIRÈNES
23	SUSPENSION AVANT/ARRIERE
24	CHASSIS
25	ALLUMAGE DIGIPLEX
26	ARBRE MOTEUR
27	ALIMENTATION
28	BOÎTE DE VITESSES
29	CARBURATEUR
30	COUVERCLES CARTER MOTEUR
31	DISTRIBUTION
32	EMBRAYAGE
33	GROUPE ECHAPPEMENT
34	DÉMARREUR
35	POMPE HUILE
36	CARTER DE BOÎTE VITESSES
37	TÊTE CYLINDRE



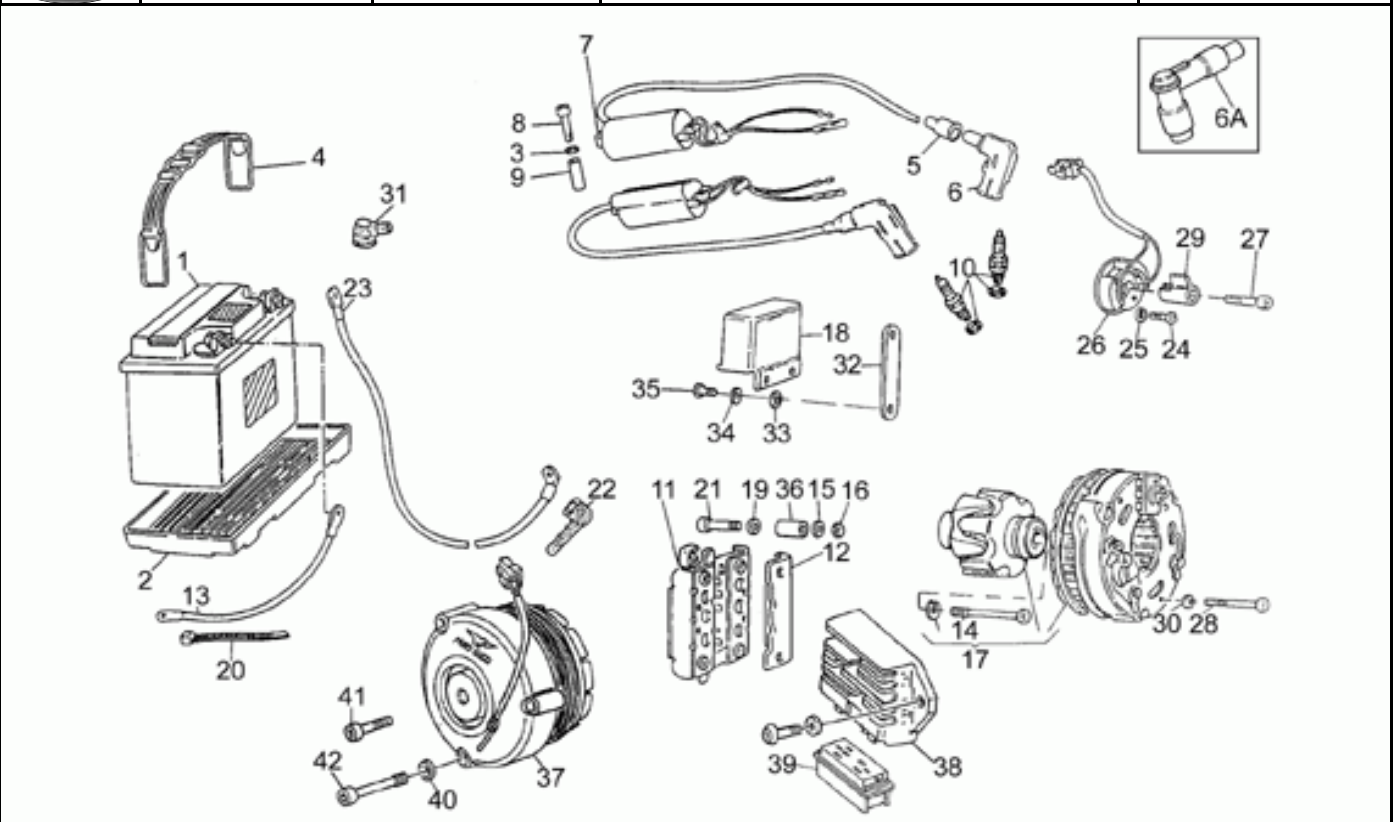

Ref.	Description	Year	I.M.	Country	Version	Code	Qty
1	Batterie 12V-32AH	-	-	-	-	14704505	1
2	Cuve	-	-	-	-	14707000	1
3	Rondelle	-	-	-	-	95004205	4
4	Bride	-	-	-	-	19704800	1
5	Capuchon	-	-	-	-	14717600	2
6	Pipe bougie	-	-	-	-	14717400	2
	Pipe bougie NGK	-	-	-	-	30717410	2
7	Bobine HT	-	-	-	-	31716560	2
8	Vis	-	-	-	-	98620240	4
9	Entretoise	-	-	-	-	91180721	4
10	Bougie NGK B8ES	-	-	-	-	31717060	2
11	Redresseur Bosch	-	-	-	-	17704300	1
12	Couvercle	-	-	-	-	14704205	1
13	Câblage masse-batterie	-	-	-	-	19748400	1
14	Vis	-	-	-	-	14712459	1
15	Rondelle évent.	-	-	-	-	95021105	4
16	Ecrou	-	-	-	-	92602205	4
17	Alternateur Bosch	-	-	-	-	17712400	1
18	Régulateur de tension Bosch	-	-	-	-	29703800	1
19	Rondelle	-	-	-	-	95100060	10
20	Collier	-	-	-	-	14609650	20
21	Vis	-	-	-	-	98052245	4
22	Capuchon	-	-	-	-	19707100	2
23	Cablage	-	-	-	-	19748000	1
24	Vis	-	-	-	-	98290512	2
25	Rondelle	-	-	-	-	95000205	2
26	Capteur phase/tours	-	-	-	-	29722270	1
27	Vis M6X18	-	-	-	-	98622318	1
28	Vis M5X45	-	-	-	-	98620245	3
29	Rotor	-	-	-	-	27721063	1
30	Rondelle évent.	-	-	-	-	95021105	3
31	Capuchon	-	-	-	-	23707100	1
32	Plaque support	-	-	-	-	29743602	2
33	Entretoise	-	-	-	-	91180605	2
34	Rondelle élastique 5,3X10X0,5	-	-	-	-	95129100	4
35	Vis	-	-	-	-	98054214	4
36	Entretoise	-	-	-	-	91180627	4
37	Alternateur SAPRISA	-	-	-	-	28712400	1
38	Régulateur de tension SAPRISA	-	-	-	-	28703800	1
39	Connecteur SAPRISA	-	-	-	-	28712500	1
40	Rondelle évent.	-	-	-	-	95021105	3
	Vis M5X45	-	-	-	-	98620245	1
41	Vis	-	-	-	-	98620250	1

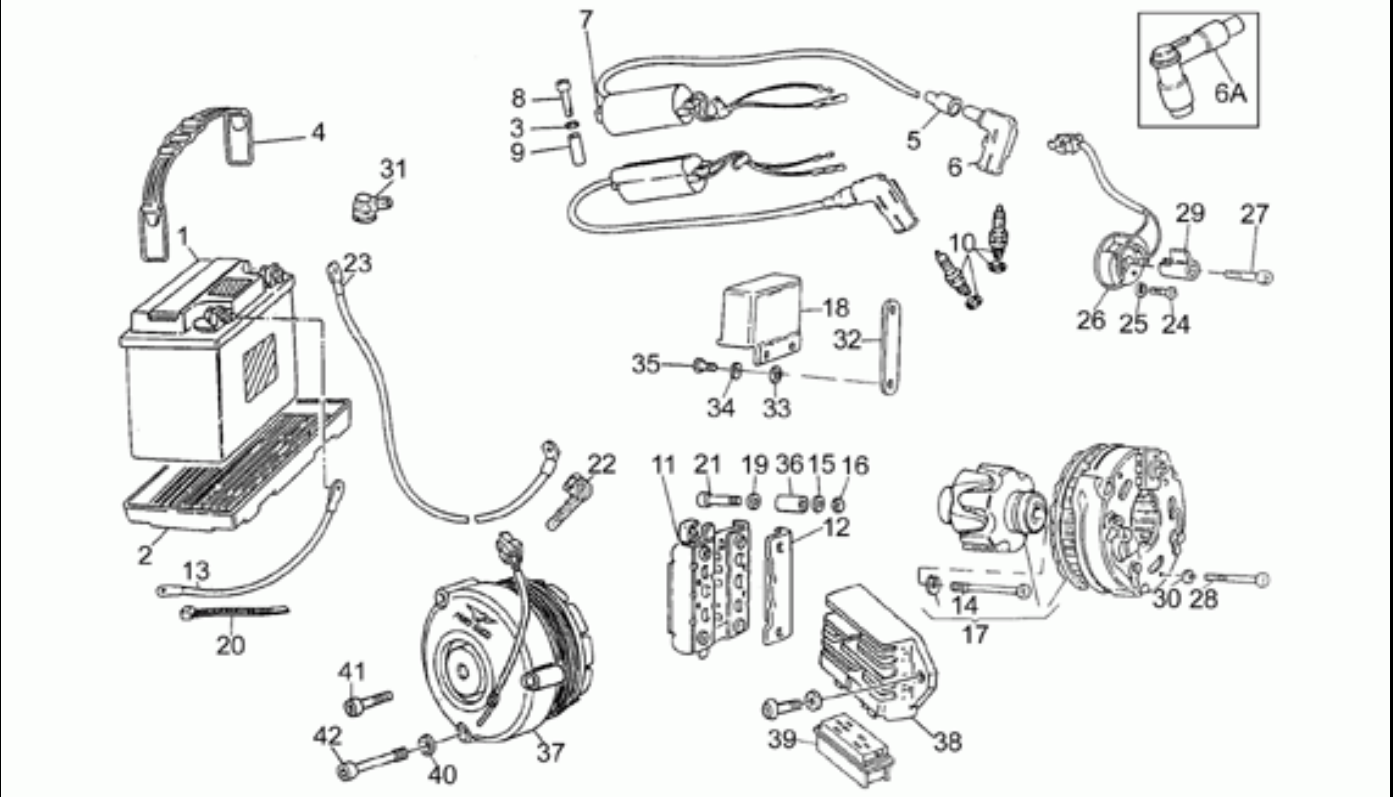

Ref.	Description	Year	I.M.	Country	Version	Code	Qty
41	Vis M5X45	-	-	-	-	98620245	3
42	Vis	-	-	-	-	28712459	3

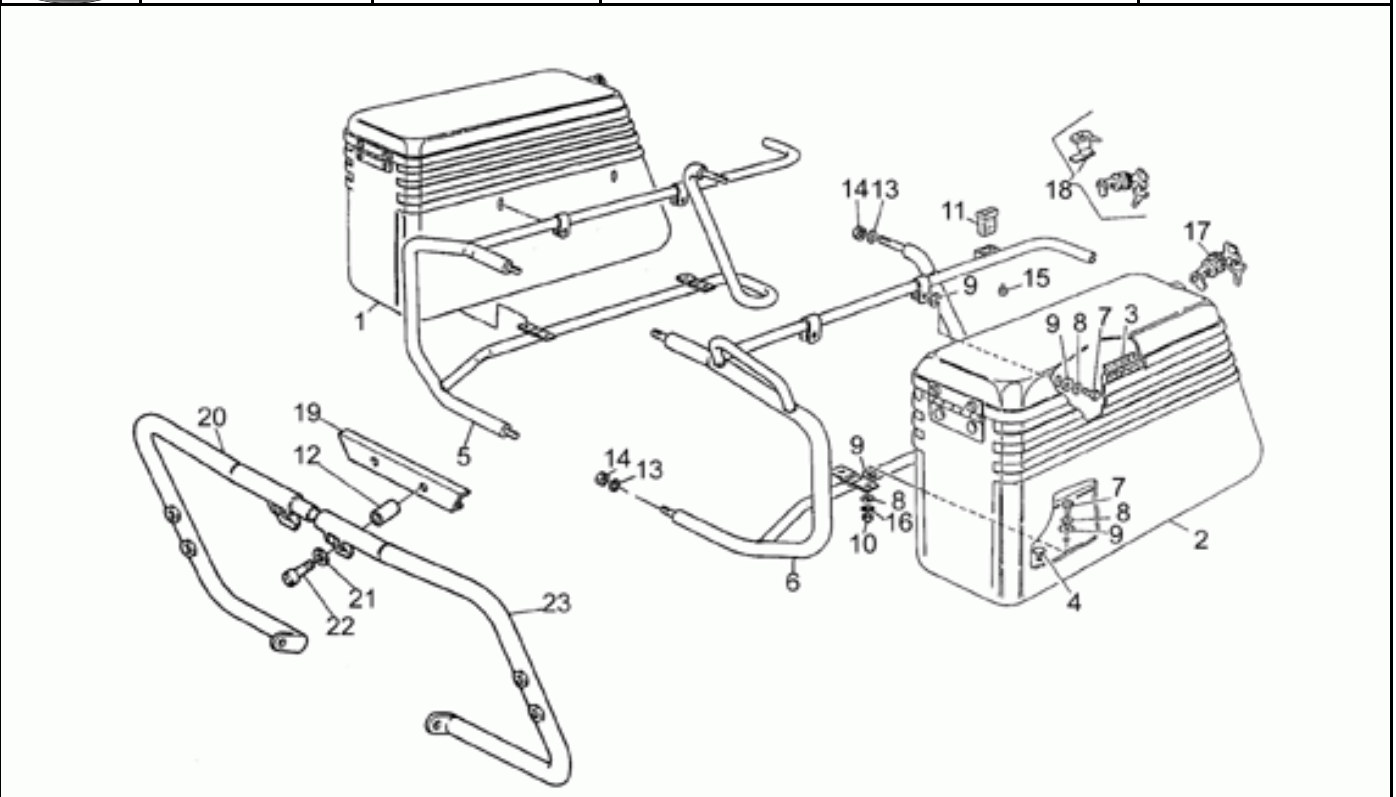

Ref.	Description	Year	I.M.	Country	Version	Code	Qty
1	Sacoche d. cpl.blanche/bleue	-	-	-	-	23482590004	1
	Sacoche d. cpl.blanche/noire	-	-	-	-	23482590003	1
	Sac latéral d. cpl.bleu ciel	-	-	-	ap	28482545	1
	Sacoche d. cpl.blanche	-	-	-	bi	23482590	1
	Sacoche d. cpl.bleue R.	-	-	-	br	89000114	1
2	Sacoche g. cpl.blanche/bleue	-	-	-	-	23485790004	1
	Sacoche g. cpl.blanche/noire	-	-	-	-	23485790003	1
	Sac latérale g. cpl.bleu ciel	-	-	-	ap	28485745	1
	Sacoche g. cpl.blanche	-	-	-	bi	23485790	1
	Sacoche g. cpl.bleue R.	-	-	-	br	89000115	1
3	Joint couvercle	-	-	-	-	28483946	2
4	Tampon	-	-	-	-	19705900	8
5	Support droite	-	-	-	-	28485045	1
6	Support gauche	-	-	-	-	28486545	1
7	Vis M6X20	-	-	-	-	98054320	12
8	Rondelle 6,5x20x2	-	-	-	-	95100141	16
9	Caoutchouc	-	-	-	-	93110060	24
10	Ecrou	-	-	-	-	92602206	8
11	Caoutchouc	-	-	-	-	28584845	2
12	Entretoise	-	-	-	-	31436415	2
13	Rondelle élastique	-	-	-	-	95021108	6
14	Ecrou	-	-	-	-	92602208	6
15	Caoutchouc	-	-	-	-	93180706	1
16	Rondelle évent.	-	-	-	-	95021106	8
17	Serrure	-	-	-	-	28489945	2
18	Kit serrure BOSCH	-	-	-	-	23736891	1
19	Plaque fixation	-	-	-	-	19451525	1
20	Pare-chocs AV d.	-	-	-	-	19450325	1
21	Rondelle	-	-	-	-	95020108	2
22	Vis	-	-	-	-	98610440	2
23	Pare-chocs AV g.	-	-	-	-	19450425	1

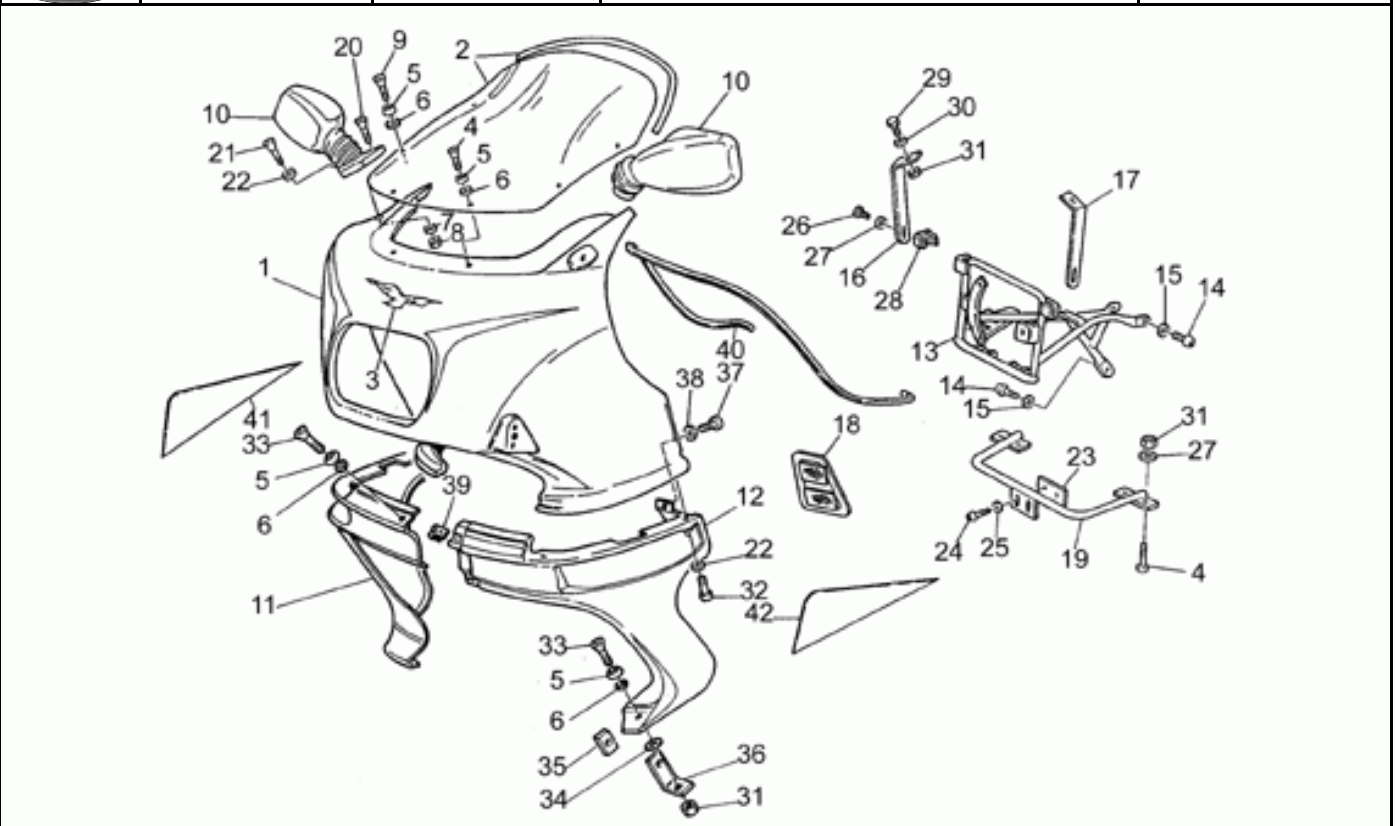

Ref.	Description	Year	I.M.	Country	Version	Code	Qty
1	Carène sup.bleu ciel	-	-	-	ap	89000254	1
	Carène sup.blanche	-	-	-	bi	19575430	1
	Carène sup.bleue	-	-	-	br	89000126	1
	Carène sup.brute	-	-	-	gr	315754401	1
2	Pare-brise	-	-	-	-	31577240	1
3	Décalco	-	-	-	-	27917520	1
4	Vis	-	-	-	-	98250625	2
5	Rondelle	-	-	-	-	18577850	10
6	Joint torique	-	-	-	-	45212400	10
7	Rondelle	-	-	-	-	95001206	4
8	Ecrou	-	-	-	-	92630207	4
9	Vis	-	-	-	-	98250630	4
10	Miroir rétroviseur	-	-	-	-	28769847	2
11	Carène inf.d. bleu ciel	-	-	-	ap	89000260	1
	Protection jambes d. blanche	-	-	-	bi	19570330	1
	Carène inf.d. bleue	-	-	-	br	89000127	1
	Protection jambes d. brute	-	-	-	gr	195703161	1
12	Carène inf.g. bleu ciel	-	-	-	ap	89000261	1
	Protection jambes g. blanche	-	-	-	bi	19570430	1
	Carène inf.g. bleue	-	-	-	br	89000128	1
	Protection jambes g. brute	-	-	-	gr	195704161	1
13	Plaque support	-	-	-	-	31578640	1
14	Vis	-	-	-	-	98822414	3
15	Rondelle élastique	-	-	-	-	95021108	3
16	Soutien d.	-	-	-	-	31573540	1
17	Soutien g.	-	-	-	-	31573640	1
18	Protection genoux	-	-	-	-	19941715	2
19	Support carène	-	-	-	-	31570840	1
20	Vis	-	-	-	-	98202516	2
21	Vis	-	-	-	-	98202520	2
22	Rondelle	-	-	-	-	95007205	8
23	Plaquette	-	-	-	-	17451750	1
24	Vis M8X20	-	-	-	-	98054420	2
25	Rondelle	-	-	-	-	95004208	2
26	Vis	-	-	-	-	98054220	2
27	Rondelle 6,15x11x0,8	-	-	-	-	95004206	4
28	Ecrou en cage	-	-	-	-	92660601	2
29	Vis M6X20	-	-	-	-	98054320	2
30	Rondelle	-	-	-	-	95100120	2
31	Ecrou M6x1	-	-	-	-	92630106	6
32	Vis	-	-	-	-	98610225	4
33	Vis	-	-	-	-	98250618	4
34	Caoutchouc	-	-	-	-	93110060	2

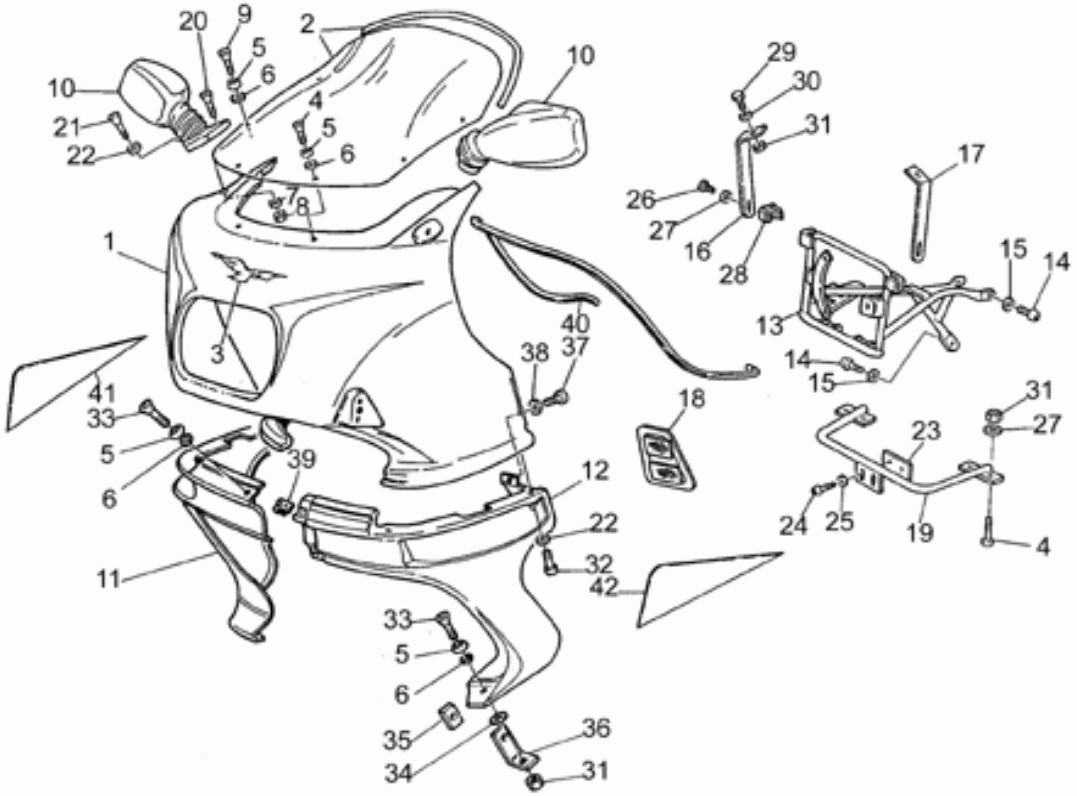

Ref.	Description	Year	I.M.	Country	Version	Code	Qty
35	Plaquette	-	-	-	-	19579216	2
36	Cale	-	-	-	-	19579116	2
37	Vis	-	-	-	-	98290520	2
38	Rondelle	-	-	-	-	29577860	2
39	Clip	-	-	-	-	28576590	2
40	Joint	-	-	-	-	00823931077	1
41	Décalco d. noire	-	-	-	ap-bi-gr	31924641	1
	Décalco d. bleue	-	-	-	br	31924640	1
42	Décalco g. noire	-	-	-	ap-bi-gr	31924741	1
	Décalco g. bleue	-	-	-	br	31924740	1

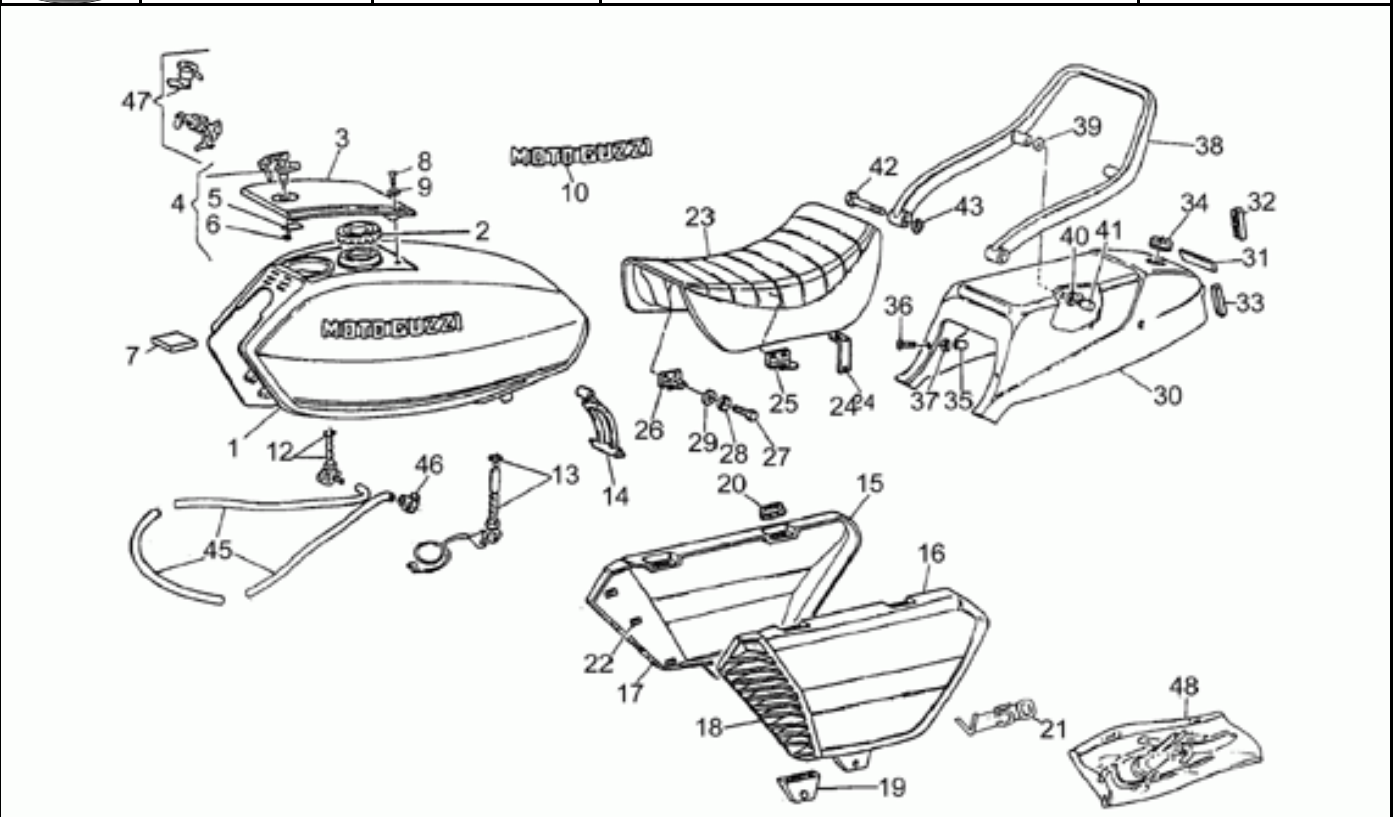

Ref.	Description	Year	I.M.	Country	Version	Code	Qty
1	Réservoir ess.blanc déc.noires	-	-	-	-	23100290003	1
	Réservoir essence	-	-	-	-	23100290	1
	Réservoir essence bleu ciel	-	-	-	ap	89000257	1
	Réservoir ess. blanc déc.bleue	-	-	-	bi	23100290004	1
	Réservoir essence bleu	-	-	-	br	89000136	1
	Réservoir brut	-	-	-	gr	191002051	1
2	Bouchon réservoir	-	-	-	-	28103945	1
3	Couvercle bleu ciel	-	-	-	ap	89000290	1
	Couvercle réservoir blanc	-	-	-	bi	23104090	1
	Couvercle bleu	-	-	-	br	89000137	1
	Couvercle réservoir brut	-	-	-	gr	141040551	1
4	Serrures	-	-	-	-	14736856	1
5	Languette	-	-	-	-	18105001	1
6	Collier	-	-	-	-	19104950	1
7	Caoutchouc	-	-	-	-	19104336	1
8	Vis	-	-	-	-	98054210	2
9	Rondelle élastique 5,3X10X0,5	-	-	-	-	95129100	2
10	Plaquette "Moto Guzzi"	-	-	-	-	28917300	2
12	Robinet ess. d.	-	-	-	-	23105470	1
13	Robinet ess. g.	-	-	-	-	23105370	1
14	Tirant	-	-	-	-	19102750	1
15	Flanc d. bleu ciel	-	-	-	ap	89000258	1
	Flanc d. blanc déc. bleu R.	-	-	-	bi	23476290004	1
	Flanc d. blanc déc. noires	-	-	-	bi	23476290003	1
	Flanc G, blanc	-	-	-	bi	23476290	1
	Flanc d. bleu	-	-	-	br	89000140	1
	Panneau latéral droit brut	-	-	-	gr	194762501	1
16	Flanc g. bleu ciel	-	-	-	ap	89000259	1
	Flanc D, blanc	-	-	-	bi	23476390	1
	Flanc g. blanc déc.bleu R.	-	-	-	bi	23476390004	1
	Flanc g. blanc déc.noires	-	-	-	bi	23476390003	1
	Flanc g. bleu	-	-	-	br	89000141	1
	Panneau latéral gauche brut	-	-	-	gr	194763501	1
17	Grille droite	-	-	-	-	19478150	1
18	Grille gauche	-	-	-	-	19478250	1
19	Caoutchouc	-	-	-	-	19478550	2
20	Caoutchouc	-	-	-	-	19478750	4
21	Plaque v50	-	-	-	-	19922051	2
22	Plaquette	-	-	-	-	39922200	10
23	Selle	-	-	-	-	23460590	1
24	Languette	-	-	-	-	28460945	1
25	Charnière arrière selle	-	-	-	-	28461345	1
26	Charnière avant selle	-	-	-	-	28461300	1

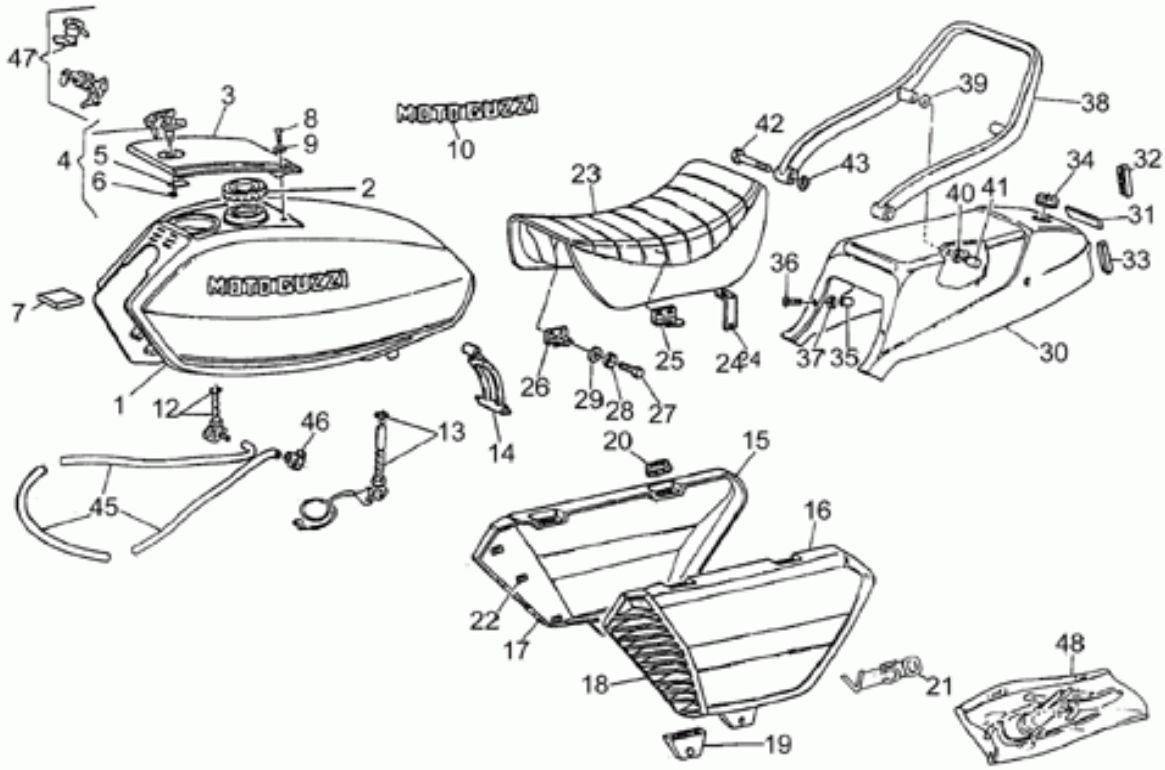

Ref.	Description	Year	I.M.	Country	Version	Code	Qty
27	Vis M6X16	-	-	-	-	98054316	5
28	Rondelle 6,5X17X1.5	-	-	-	-	95100139	5
29	Rondelle évent.	-	-	-	-	95021106	5
30	Queue bleu ciel	-	-	-	ap	89000289	1
	queue blanche DECALCO BLEU R.	-	-	-	bi	23472690004	1
	queue blanche DECALCO NOIRES	-	-	-	bi	23472690003	1
	Queue blanche s.za decalco	-	-	-	bi	23472690	1
	Queue bleue	-	-	-	br	89000129	1
	Queue brute	-	-	-	gr	234726901	1
31	Déc."MotoGuzzi"	-	-	-	-	28923400	1
32	Joint d.	-	-	-	-	28439845	1
33	Joint g.	-	-	-	-	28439846	1
34	Caoutchouc	-	-	-	-	28479945	1
35	Tige fixation	-	-	-	-	28472545	2
36	Vis	-	-	-	-	98280616	2
37	Rondelle	-	-	-	-	95000206	2
38	Poignée pass.	-	-	-	-	28464401	1
39	Rondelle	-	-	-	-	28478645	2
40	Entretoise	-	-	-	-	28471845	2
41	Pivot	-	-	-	-	28471945	2
42	Pivot	-	-	-	-	23466890	2
43	Rondelle	-	-	-	-	95129180	2
45	Tuyau caoutchouc 12,5X7,8 5/16"	-	-	-	-	00823956080	1
46	Collier	-	-	-	-	28157950	4
47	Kit serrure BOSCH	-	-	-	-	23736891	1
48	Décalco série nero	-	-	-	ap-bi-gr	23923390003	1
	Décalco série	-	-	-	br	23923390004	1

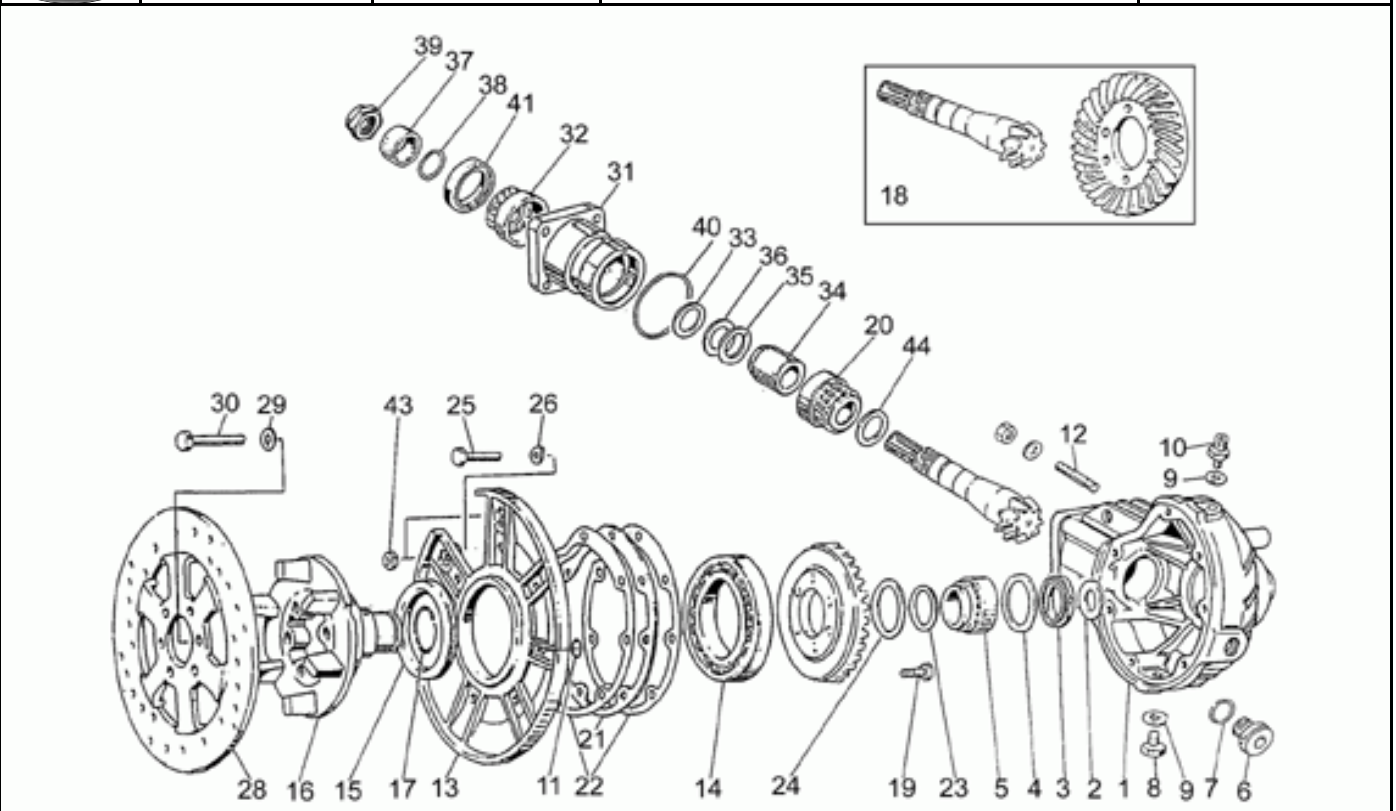

Ref.	Description	Year	I.M.	Country	Version	Code	Qty
1	Couvercle transmission gris	-	-	-	ap-bi-br	31350380	1
	Couvercle	-	-	-	gr	19350322	1
2	Rondelle d'appui	-	-	-	-	19351900	1
3	Bague d'étanchéité	-	-	-	-	90403547	1
4	Rondelle d'appui	-	-	-	-	19351100	1
5	Roulement à rouleaux 35x50x17	-	-	-	-	92252235	1
6	Bouchon huile	-	-	-	-	12022600	1
7	Joint torique 20,24x2,62	-	-	-	-	90706203	1
8	Bouchon vid.huile	-	-	-	-	31003766	1
9	Garniture	-	-	-	-	10528900	2
10	Bouchon purge	-	-	-	-	19206501	1
11	Joint torique	-	-	-	-	90706076	2
12	Vis sans tête	-	-	-	-	96508055	4
13	Couvercle	-	-	-	-	19350421	1
14	Roulement à billes 70x110x13	-	-	-	-	92201070	1
15	Bague d'étanchéité 75x90x8	-	-	-	-	90407590	1
16	Pivot	-	-	-	-	19351401	1
17	Bague de butée	-	-	-	-	90353030	1
18	Couple conique Z8/31	-	-	-	-	19354621	1
19	Vis	-	-	-	-	19356320	6
20	Roulement roul.con.	-	-	-	-	92249223	1
21	Cale 0,8 mm	-	-	-	-	19355400	1
	Cale 0,9 mm	-	-	-	-	19355402	1
	Cale 1 mm	-	-	-	-	19355404	1
	Cale 1,1 mm	-	-	-	-	19355406	1
	Cale 1,2 mm	-	-	-	-	19355408	1
	Cale 1,3 mm	-	-	-	-	19355410	1
	Cale 1,4 mm	-	-	-	-	19355411	1
	Cale 1,5 mm	-	-	-	-	19355412	1
	Cale 1,6 mm	-	-	-	-	19355413	1
22	Joint	-	-	-	-	19350700	2
23	Rondelle éventail	-	-	-	-	19352300	1
24	Rondelle éventail	-	-	-	-	19353500	1
25	Vis	-	-	-	-	19357660	7
26	Rondelle élastique	-	-	-	-	61270300	7
28	Disque frein arrière	-	-	-	-	19635736	1
29	Rondelle	-	-	-	-	14615901	6
30	Vis	-	-	-	-	98054418	6
31	Habillage roulement	-	-	-	-	19352401	1
32	Roulement à rouleaux 20x47x14	-	-	-	-	92249220	1
33	Cale 1 mm	-	-	-	-	19355300	2
	Cale 1,1 mm	-	-	-	-	19355301	2

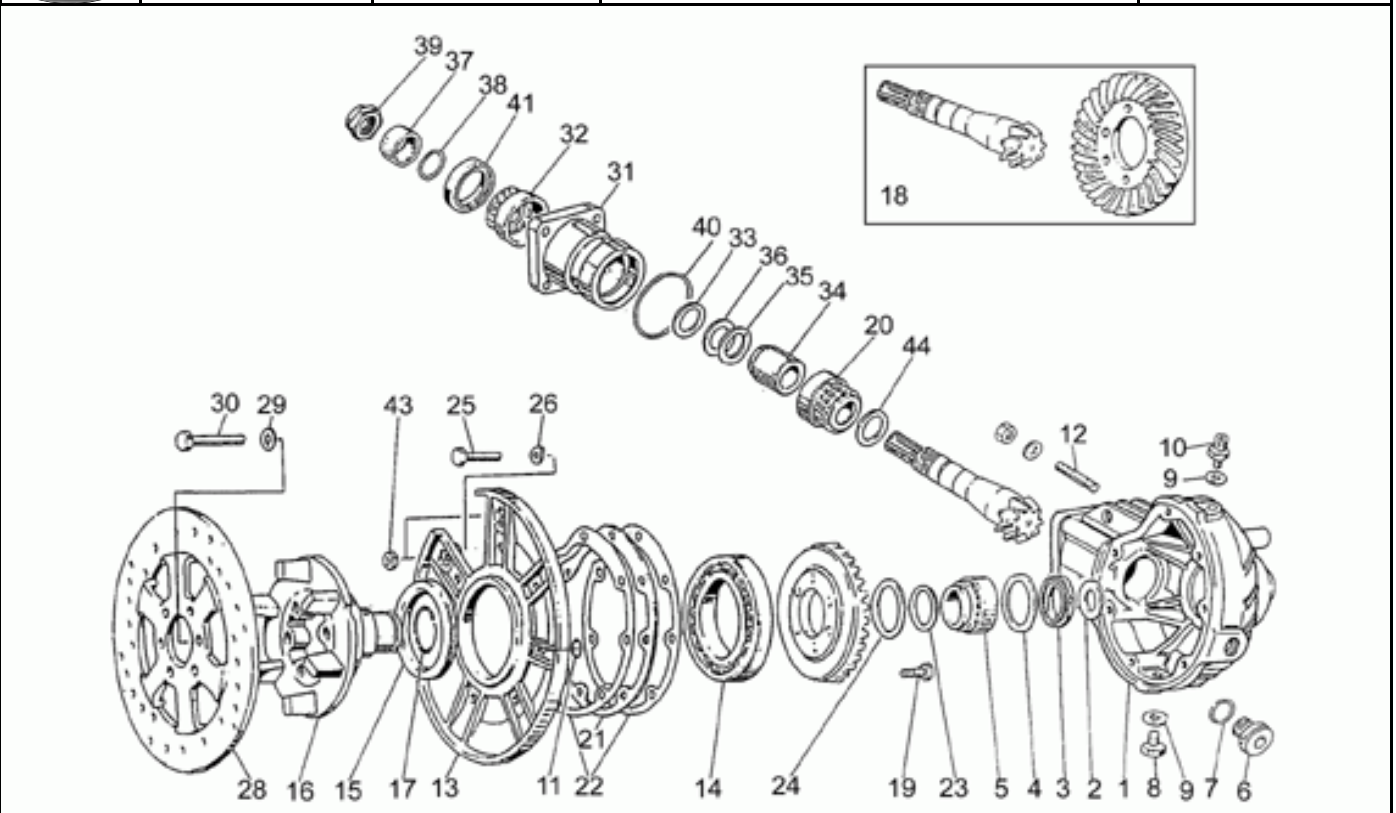

Ref.	Description	Year	I.M.	Country	Version	Code	Qty
33	Cale 1,2 mm	-	-	-	-	19355302	2
	Cale 1,3 mm	-	-	-	-	19355303	2
	Cale 1,4 mm	-	-	-	-	19355304	2
	Cale 1,5 mm	-	-	-	-	19355305	2
	Cale 1,6 mm	-	-	-	-	19355306	2
	Cale 1,7 mm	-	-	-	-	19355307	2
	Cale 1,8 mm	-	-	-	-	19355308	2
	Cale 1,9 mm	-	-	-	-	19355309	2
34	Entretoise	-	-	-	-	19355121	1
35	Rondelle ajustem. 0,1 mm	-	-	-	-	19355200	1
36	Rondelle ajustem. 0,15 mm	-	-	-	-	19355202	1
37	Entretoise	-	-	-	-	19356801	1
38	Bague d'étanchéité 18,77X1,78	-	-	-	-	90706188	1
39	Ecrou	-	-	-	-	19356700	1
40	Bague d'étanchéité	-	-	-	-	90706552	1
41	Bague d'étanchéité	-	-	-	-	90403247	1
43	Ecrou	-	-	-	-	92602208	2
44	Cale 1 mm	-	-	-	-	19355320	1
	Cale 1,1 mm	-	-	-	-	19355321	1
	Cale 1,2 mm	-	-	-	-	19355322	1
	Cale 1,3 mm	-	-	-	-	19355323	1
	Cale 1,4 mm	-	-	-	-	19355324	1
	Cale 1,5 mm	-	-	-	-	19355325	1
	Cale 1,6 mm	-	-	-	-	19355326	1
	Cale 1,7 mm	-	-	-	-	19355327	1
	Cale 1,8 mm	-	-	-	-	19355328	1
	Cale 1,9 mm	-	-	-	-	19355329	1

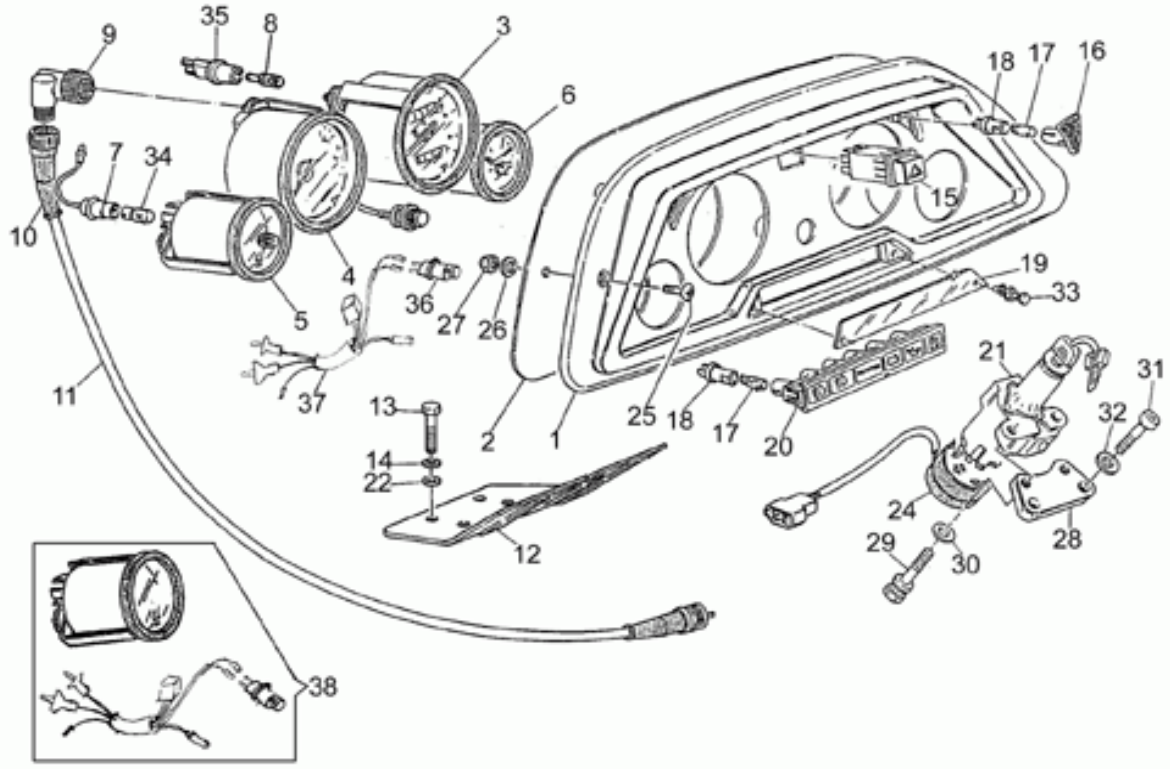

Ref.	Description	Year	I.M.	Country	Version	Code	Qty
1	Tableau de bord	-	-	-	-	29766260	1
2	Support instruments	-	-	-	-	31764140	1
3	Compteur kilométrique	-	-	-	-	27761535	1
4	Compte-tours MOTOPLAT	-	-	-	-	29767260	1
	Electronic revolution counter	-	-	-	Aed	28767235	1
5	Horloge	-	-	-	-	29783060	1
	Horloge ELETTRICO	-	-	-	-	29783061	1
6	Voltmètre	-	-	-	-	29784960	1
7	Porte-ampoule	-	-	-	-	28760633	1
8	Lampe (ou Ampoule) 12v-3w	-	-	-	-	93450120	3
9	Renvoi 90j	-	-	-	-	17768360	1
10	Gaine	-	-	-	-	17762200	1
11	Transmission tachymètre	-	-	-	-	27760410	1
12	Support émetteur	-	-	-	-	19502315	1
13	Vis	-	-	-	-	98074418	2
14	Rondelle	-	-	-	-	95007208	2
15	Turn indicator switch	-	-	-	-	28745761	1
16	Porte-témoins clignotants	-	-	-	-	65758970	2
17	Lampe (ou Ampoule) 12V-1,2W	-	-	-	-	93450140	8
18	Porte-ampoule	-	-	-	-	19768680	8
19	Cache vitré témoins	-	-	-	-	29781160	1
20	Boîtier témoins	-	-	-	-	27766985	1
21	Bloc démarreur-bloc	-	-	-	-	01782500	1
	Bloc démarreur-bloc	-	-	-	-	30782511	1
22	Rondelle	-	-	-	-	95000208	4
24	Câblage commutateur	-	-	-	-	29731460	1
	Câblage commutateur POLIZIA	-	-	-	-	19731417	1
25	Vis	-	-	-	-	98326021	2
26	Rondelle	-	-	-	-	95000206	2
27	Ecrou M6x1	-	-	-	-	92630106	2
28	Support commutateur	-	-	-	-	19782315	1
	Support commutateur POLIZIA	-	-	-	-	20782321	1
29	Vis à arrachement	-	-	-	-	97260425	2
30	Rondelle	-	-	-	-	95000208	2
31	Vis M8X35	-	-	-	-	98620435	2
32	Rondelle	-	-	-	-	95004208	2
33	Tige fixation	-	-	-	-	30753310	2
34	Lampe (ou Ampoule) 12V-4W	-	-	-	-	93450119	1
35	Porte-ampoule	-	-	-	-	14768650	3
36	Bouton	-	-	-	-	19761117	1
37	Câblage adaptateur	-	-	-	-	19761217	1
38	Horloge cpl.	-	-	-	-	29783061001	1

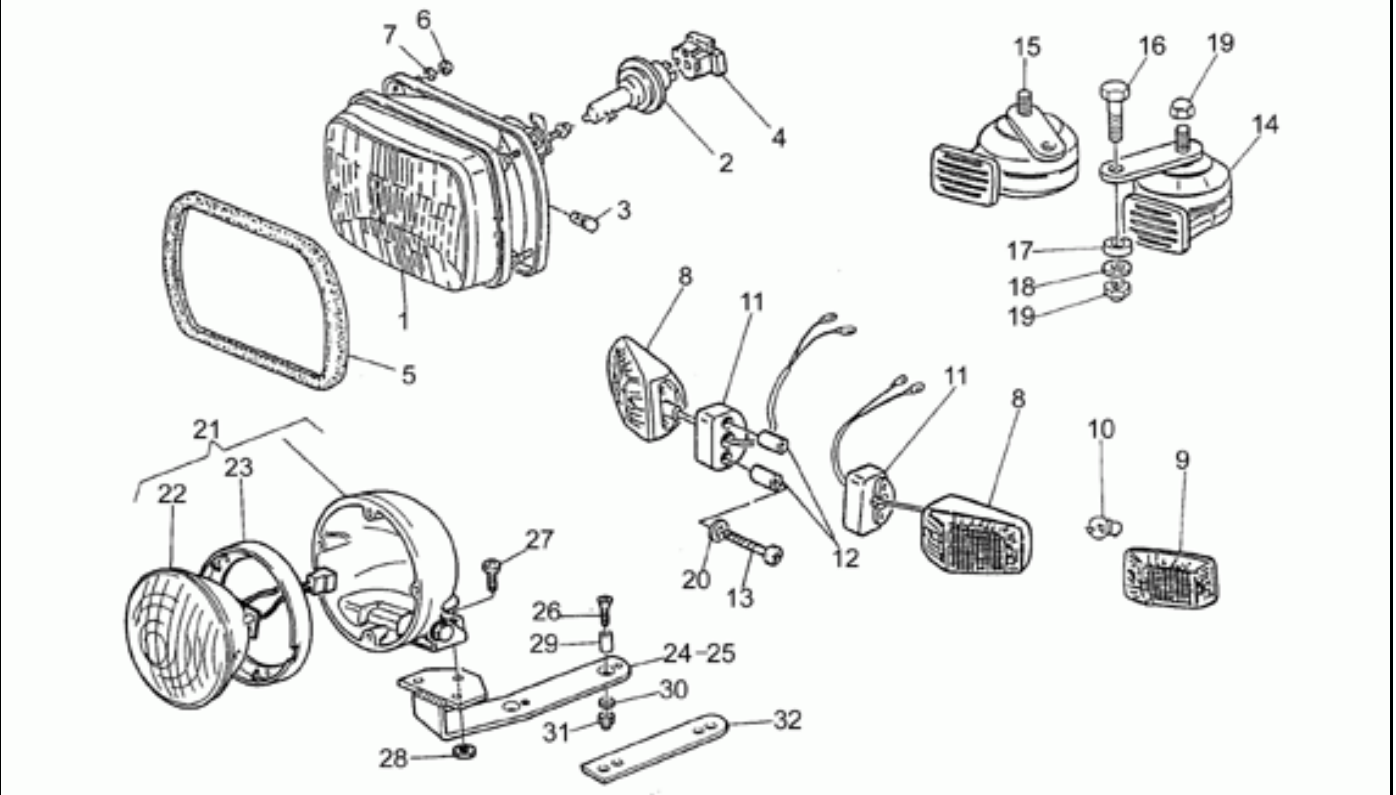

Ref.	Description	Year	I.M.	Country	Version	Code	Qty
1	Feu avant	-	-	-	-	28740560	1
2	Lampe (ou Ampoule) 12V-55/60W	-	-	-	-	93450232	1
3	Lampe (ou Ampoule) 12V-4W	-	-	-	-	93450119	1
4	Porte-ampoule	-	-	-	-	14756255	1
5	Joint	-	-	-	-	00823933090	1
6	Ecrou	-	-	-	-	92602205	4
7	Rondelle évent.	-	-	-	-	95021105	3
8	Clignotant AV	-	-	-	-	30750610	2
9	Vitre clignotant	-	-	-	-	23753710	2
10	Lampe (ou Ampoule) 12V-10W	-	-	-	-	93450127	2
11	Support clignotant	-	-	-	-	30751410	2
12	Entretoise	-	-	-	-	91180626	4
13	Vis	-	-	-	-	99210445	4
14	Avertisseur ton aigu	-	-	-	-	28743760	1
15	Avertisseur ton grave	-	-	-	-	28743761	1
16	Vis M6X16	-	-	-	-	98054316	2
17	Entretoise	-	-	-	-	91180605	2
18	Rondelle	-	-	-	-	95000206	2
19	Ecrou M6x1	-	-	-	-	92630206	4
20	Rondelle 5,25x14x1,5	-	-	-	-	95100059	4
21	Feu halogène cpl.bleu CPU	-	-	-	-	31743335	2
22	Feu suppl.halogène bleu CPU	-	-	-	-	23743392	2
23	Cadre phare	-	-	-	-	23742890	2
24	Bride droite	-	-	-	-	19728015	1
25	Bride gauche	-	-	-	-	19728115	1
26	Vis	-	-	-	-	98250630	4
27	Vis	-	-	-	-	98290520	6
28	Ecrou	-	-	-	-	92630105	6
29	Entretoise	-	-	-	-	91180615	4
30	Rondelle	-	-	-	-	95100123	4
31	Ecrou	-	-	-	-	92630207	4
32	Joint	-	-	-	-	19743815	2

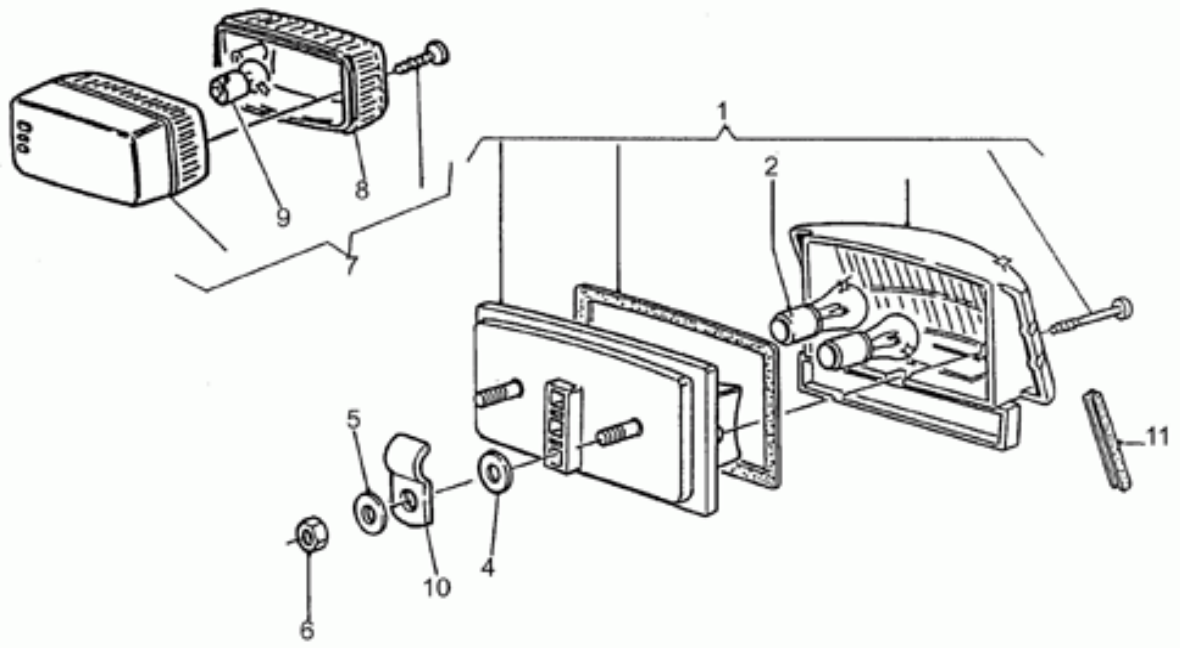

Ref.	Description	Year	I.M.	Country	Version	Code	Qty
1	Feu arrière	-	-	-	-	27740985	1
2	Lampe (ou Ampoule) 12V/5-21W	-	-	-	-	93450224	2
4	Caoutchouc	-	-	-	-	93110060	2
5	Cale	-	-	-	-	90716067	4
6	Ecrou M6x1	-	-	-	-	92630206	3
7	Clignotant arrière	-	-	-	-	28751647	2
8	Vitre clignotant	-	-	-	-	28753747	2
9	Lampe (ou Ampoule) 12V-10W	-	-	-	-	93450127	2
10	Cavalier	-	-	-	-	93301175	1
11	Joint	-	-	-	-	28439800	2

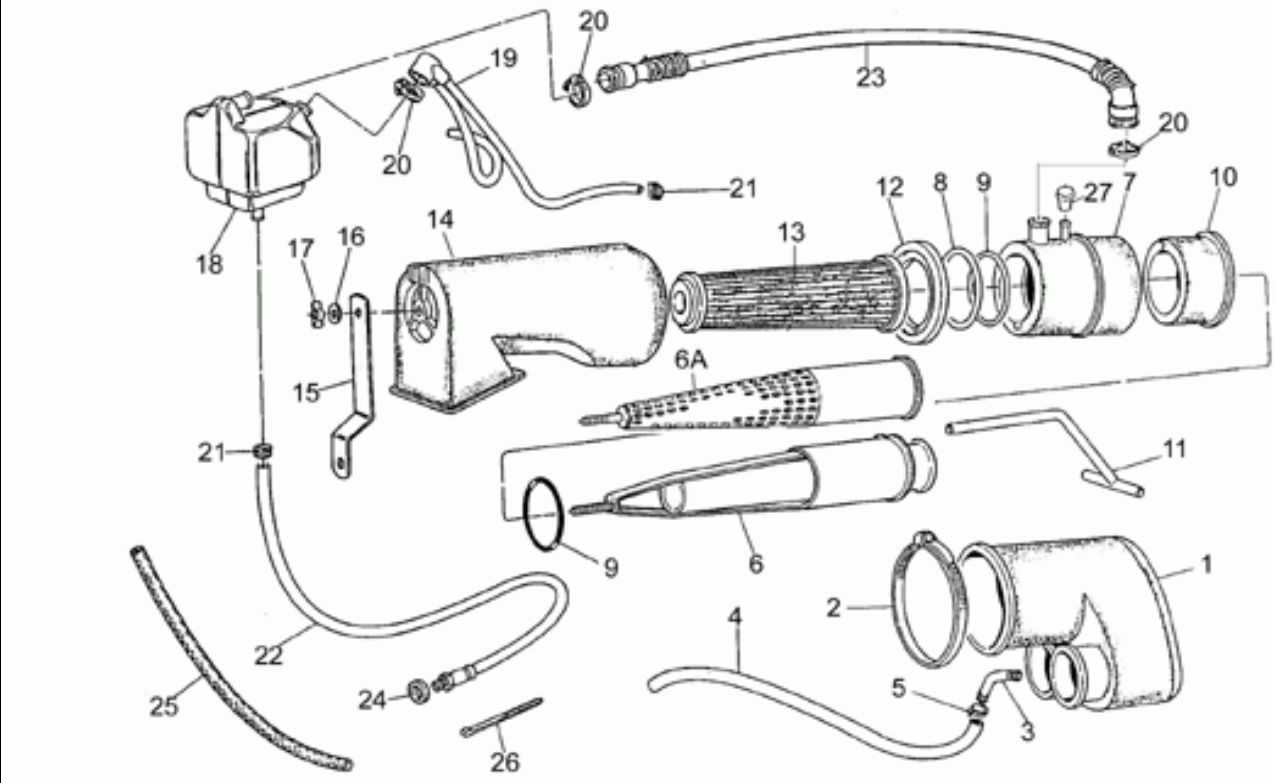

Ref.	Description	Year	I.M.	Country	Version	Code	Qty
1	Collecteur aspiration	-	-	-	-	19114300	1
2	Collier	-	-	-	-	93305092	1
3	Tuyau	-	-	-	-	17114650	1
4	Tuyau caoutchouc 5x9	-	-	-	-	00823944050	1
5	Collier	-	-	-	-	14609650	1
6	Support filtre	-	-	-	1A	19155775	1
	Support filtre	-	-	-	2A	31155780	1
7	Tuyau d'aspiration	-	-	-	-	19156701	1
8	Joint	-	-	-	-	19113900	1
9	Bague d'étanchéité	-	-	-	-	90706552	2
10	Rallonge manchon aspiration	-	-	-	-	19156900	1
11	Tuyau reniflard radiateur	-	-	-	-	19156001	1
12	Douille guidage	-	-	-	-	17113450	1
13	Filtre air	-	-	-	-	17113651	1
14	Couvercle filtre	-	-	-	-	17114050	1
15	Plaque support	-	-	-	-	27114120	1
16	Rondelle 5,25x14x1,5	-	-	-	-	95100059	1
17	Ecrou	-	-	-	-	92670305	1
18	Corp	-	-	-	-	27153460	1
19	Reniflard	-	-	-	1A	23159670	1
	Reniflard	-	-	-	2A	27159660	1
20	Collier	-	-	-	-	93305018	3
21	Collier	-	-	-	-	61108400	3
22	Reniflard	-	-	-	-	27159360	1
23	Tuyau	-	-	-	-	27157420	1
24	Joint	-	-	-	1A	12154200	1
	Joint	-	-	-	2A	90714082	1
25	Gaine thermique	-	-	-	-	00823923140	1
26	Collier	-	-	-	-	61609630	1
27	Caoutchouc de ferm.	-	-	-	-	19433000	1

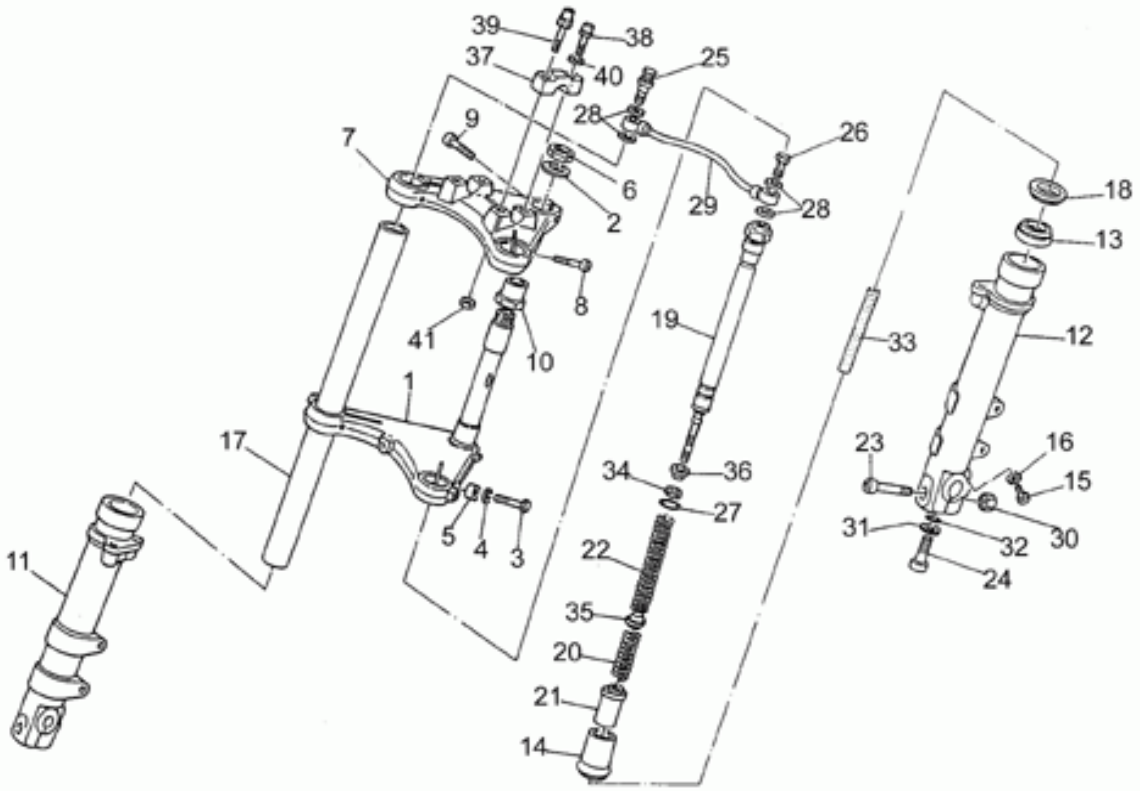

Ref.	Description	Year	I.M.	Country	Version	Code	Qty
1	Base avec tube	-	-	-	-	23494070	1
2	Rondelle bouchon fourreau	-	-	-	-	18513560	1
3	Vis M10X55	-	-	-	-	98072555	2
4	Rondelle	-	-	-	-	95007210	2
5	Entretoise	-	-	-	-	91181016	2
6	Bouchon tube	-	-	-	-	18513460	1
7	Plaque sup. fourche	-	-	-	-	23493140	1
	Plaque sup. fourche POLIZIA	-	-	-	-	31493140	1
8	Vis	-	-	-	-	98610540	2
9	Vis	-	-	-	-	98612535	1
10	Douille bloc. direction	-	-	-	-	18516660	1
11	Housse Dte-Gris-	-	-	-	-	31522515	1
12	Housse Gche-Gris-	-	-	-	-	31522615	1
13	Joint spi	-	-	-	-	90403857	2
14	Douille	-	-	-	-	20527620	2
15	Vis	-	-	-	-	98622320	2
16	Rondelle	-	-	-	-	95100116	4
17	Tige	-	-	-	-	23525470	2
18	Pare-poussière	-	-	-	-	31524550	2
19	Amortisseur	-	-	-	-	23526470	2
20	Contre-ressort	-	-	-	-	23526610	2
21	Tampon fin course	-	-	-	-	28527540	2
22	Ressort	-	-	-	-	23526910	2
23	Vis	-	-	-	-	98620545	2
24	Vis	-	-	-	-	98622530	2
25	Vis percée	-	-	-	-	28556450	1
26	Soupape air	-	-	-	-	28556250	1
27	Bague d'étanchéité	-	-	-	-	90706282	2
28	Rondelle en cuivre	-	-	-	-	28556350	4
29	Tuyau	-	-	-	-	19529660	1
30	Ecrou	-	-	-	-	92602210	2
31	Rondelle plate	-	-	-	-	27499120	2
32	Joint torique	-	-	-	-	90706094	2
33	Tube anti-frottement	-	-	-	-	23526370	2
34	Ecrou	-	-	-	-	92602308	2
35	Entretoise	-	-	-	-	23527910	2
36	Rondelle	-	-	-	-	28526540	2
37	Collier	-	-	-	-	17500200	2
38	Goujon	-	-	-	-	28500745	2
39	Goujon	-	-	-	-	19500715	2
40	Rondelle	-	-	-	-	95000208	4
41	Ecrou	-	-	-	-	92630108	2

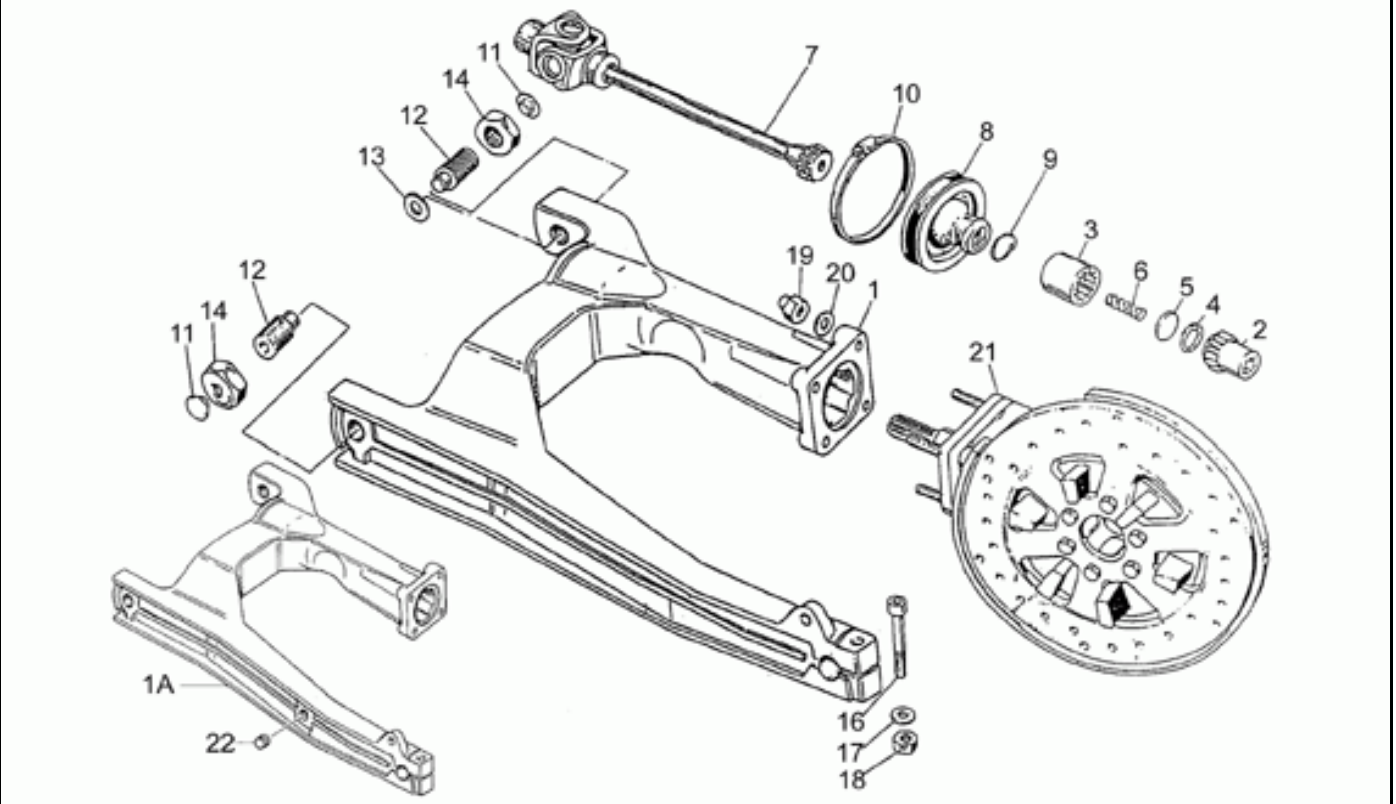

Ref.	Description	Year	I.M.	Country	Version	Code	Qty
1	Fourche ar.gris	-	-	-	ap-bi-br	31540280	1
	Fourche brute	-	-	-	gr	23540282	1
2	Manchon	-	-	-	-	19327701	1
3	Manchon	-	-	-	-	19328801	1
4	Bague seeger	-	-	-	-	90272023	1
5	Disque	-	-	-	-	19327601	1
6	Ressort	-	-	-	-	94321099	1
7	Joint	-	-	-	-	23328081	1
8	Collier de protection	-	-	-	-	23548080	1
9	Ressort	-	-	-	-	23548180	1
10	Collier	-	-	-	-	93305074	1
11	Bouchon	-	-	-	-	93180105	2
12	Pivot	-	-	-	-	19547000	2
13	Cale	-	-	-	-	35214300	1
14	Ecrou	-	-	-	-	14547800	2
16	Vis	-	-	-	-	98620545	1
17	Rondelle 10,2x18x2	-	-	-	-	95004210	1
18	Ecrou	-	-	-	-	92602210	1
19	Ecrou	-	-	-	-	92781081	4
20	Rondelle	-	-	-	-	14615901	4
21	Boîte transm.cpl.brute	-	-	-	-	19350220	1
22	Caoutchouc	-	-	-	-	93180216	1

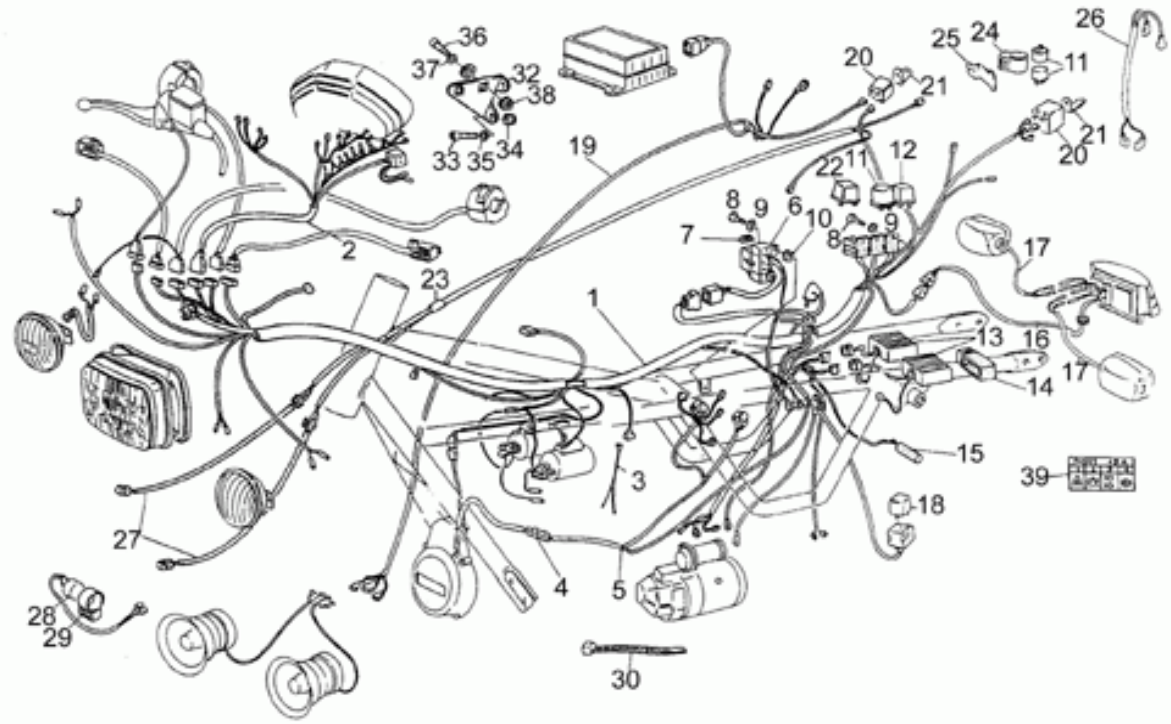

Ref.	Description	Year	I.M.	Country	Version	Code	Qty
1	Circuit electrique	-	-	-	-	23747191	1
	Circuit electrique	-	-	-	Aed	19747116	1
2	Câblage tableau de bord	-	-	-	-	29747260	1
3	Câble capteur point mort	-	-	-	-	31724540	1
4	Câblage alternateur BOSCH	-	-	-	-	23726300	1
5	Câblage alternat.-régulateur	-	-	-	-	23725891	1
6	Boîte à fusibles	-	-	-	-	30743000	1
7	Fusible 15A	-	-	-	-	28742560	6
8	Vis	-	-	-	-	98202516	4
9	Rondelle 5,25x14x1,5	-	-	-	-	95100059	4
10	Ecrou en cage	-	-	-	-	92660501	2
11	Clignotement	-	-	-	-	17750520	3
12	Relais démarrage	-	-	-	-	30732510	1
	télérupteur démarreur POLICE	-	-	-	-	19732500	1
13	Centrale	-	-	-	-	23721493	2
14	Support élastique	-	-	-	-	27723835	2
15	Condensateur	-	-	-	-	27710435	1
16	Câblage feu AR	-	-	-	-	30747310	1
17	Cablage clignot.	-	-	-	-	28753145	2
18	Interrupteur béquille	-	-	-	-	29732550	1
19	Câblage sirènes deux tons	-	-	-	-	23726191	1
20	Relais sirènes SWF	-	-	-	-	28732545	2
21	Support relais	-	-	-	-	28732946	2
22	Relais sirènes	-	-	-	-	28732560	1
23	Câblage intermittences	-	-	-	-	23757791	1
24	Bloc	-	-	-	-	17751200	1
25	Plaque	-	-	-	-	17750400	1
26	Cablage	-	-	-	-	18720150	1
27	Cablage 1 LAMP.	-	-	-	-	23720190	2
28	Klaxon	-	-	-	-	28787247	1
29	Bloc	-	-	-	-	30787310	1
30	Collier	-	-	-	-	14609650	20
32	Support relais	-	-	-	Aed	31704061	1
33	Vis	-	-	-	Aed	98622214	2
34	Ecrou	-	-	-	Aed	92630105	2
35	Rondelle	-	-	-	Aed	95004205	2
36	Vis M5x10	-	-	-	Aed	98230510	2
37	Rondelle	-	-	-	Aed	95100064	2
38	Ecrou en cage	-	-	-	Aed	92660501	2
39	Décal tabelle fusibles	-	-	-	Aed	30945000	1

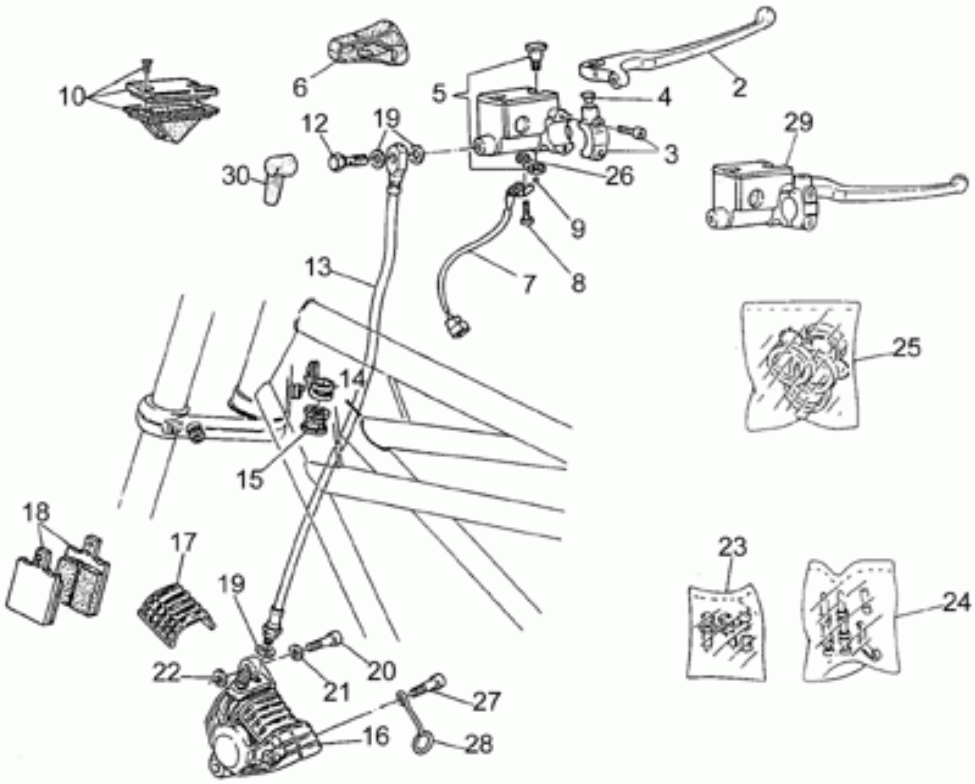

Ref.	Description	Year	I.M.	Country	Version	Code	Qty
2	Levier frein	-	-	-	-	27605615	1
3	Cavalier	-	-	-	-	27664075	1
4	Bouchon	-	-	-	-	93180080	1
5	Pivot	-	-	-	-	27604815	1
6	Capuchon	-	-	-	-	27663615	1
7	Interrupteur stop	-	-	-	-	27749815	1
8	Vis	-	-	-	-	98200214	2
9	Bille	-	-	-	-	92295708	1
10	Couvercle pompe	-	-	-	-	27661115	1
12	Vis spéciale	-	-	-	-	95990028	1
13	Tuyau flexible	-	-	-	-	27657135	1
14	Collier	-	-	-	-	17658360	1
15	Bague	-	-	-	-	17658260	1
16	Pince frein AV D	-	-	-	-	31652365	1
17	Couvercle pince frein BREMBO	-	-	-	-	39654700	1
	Couvercle pince frein GRIMECA	-	-	-	-	31654765	1
18	Plaquettes-paire BREMBO	-	-	-	-	27654610	1
	Plaquettes-paire GRIMECA	-	-	-	-	31654665	2
19	Joint 1mm	-	-	-	-	25656100	4
20	Vis	-	-	-	-	98622422	1
21	Rondelle élastique	-	-	-	-	61270300	2
22	Rondelle	-	-	-	-	95100250	1
	Rondelle 8,5X18X0,8	-	-	-	-	95100251	1
23	Purge+capuchon BREMBO	-	-	-	-	65659200	1
	Purge+capuchon GRIMECA	-	-	-	-	31659265	1
24	Axes+ressort BREMBO	-	-	-	-	39659100	1
	Axes+ressort GRIMECA	-	-	-	-	31659165	2
25	Kit révision pince BREMBO	-	-	-	-	39659000	1
	Kit révision pince GRIMECA	-	-	-	-	31659065	1
26	Ecrou	-	-	-	-	92608202	2
27	Vis M8X25	-	-	-	-	98622425	1
28	Guide-câble	-	-	-	-	23655770	1
29	Maît. cyl. frein AV	-	-	-	-	27660115	1
30	Capuchon	-	-	-	-	39663801	1

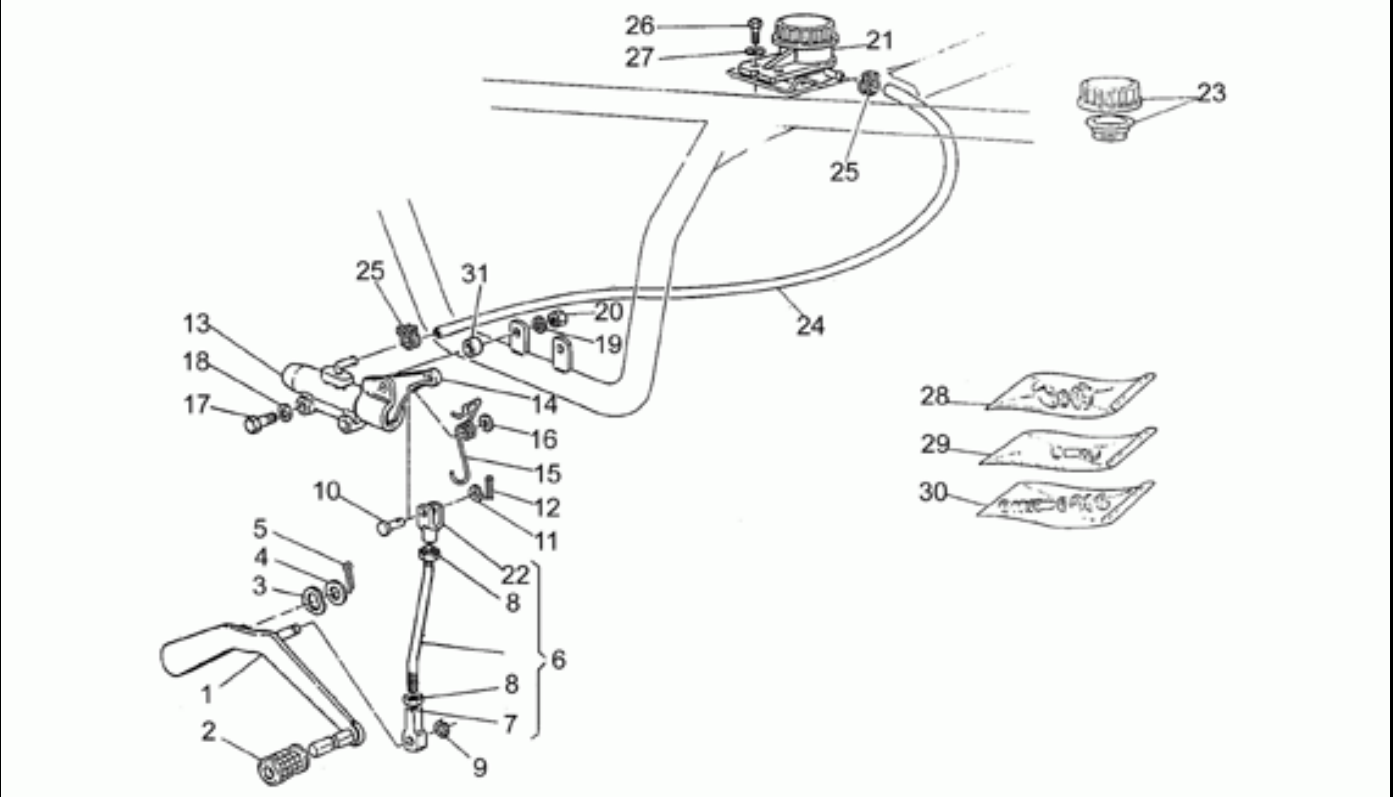

Ref.	Description	Year	I.M.	Country	Version	Code	Qty
1	Levier de frein AR	-	-	-	-	19677000	1
2	Caoutchouc	-	-	-	-	14251001	1
3	Rondelle élastique	-	-	-	-	95129260	1
4	Rondelle plate	-	-	-	-	95004215	1
5	Goupille	-	-	-	-	95500227	1
6	Tirant pour boite vitesse cpl.	-	-	-	-	19675000	1
7	Bloc	-	-	-	-	18257551	1
8	Ecrou	-	-	-	-	92690073	2
9	Bague seeger	-	-	-	-	90271008	1
10	Goupille	-	-	-	-	95770265	1
11	Rondelle	-	-	-	-	95129110	1
12	Goupille	-	-	-	-	95500222	1
13	Maît.cyl. frein AR	-	-	-	-	31666990	1
14	Levier de frein AR	-	-	-	-	19667500	1
15	Ressort man.ferin ar.	-	-	-	-	19667600	1
16	Rondelle 6,15x11x0,8	-	-	-	-	95004206	1
17	Vis	-	-	-	-	98054330	2
18	Rondelle	-	-	-	-	95000206	2
19	Rondelle évent.	-	-	-	-	95021106	2
20	Ecrou	-	-	-	-	92602206	2
21	Réserv. huile freins	-	-	-	-	65663500	1
22	Fourchette	-	-	-	-	31626860	1
23	Bouchon réservoir	-	-	-	-	17661052	1
24	Tuyau huile	-	-	-	-	00823950050	1
25	Collier	-	-	-	-	19157800	2
26	Vis M6X16	-	-	-	-	98054316	2
27	Rondelle	-	-	-	-	95000206	2
28	Gr.révision raccordde pomp	-	-	-	-	19659500	1
29	Kit révision levier	-	-	-	-	19659600	1
30	Kit révision pompe	-	-	-	-	17659350	1
31	Entretoise 7X12X5	-	-	-	-	91180705	2

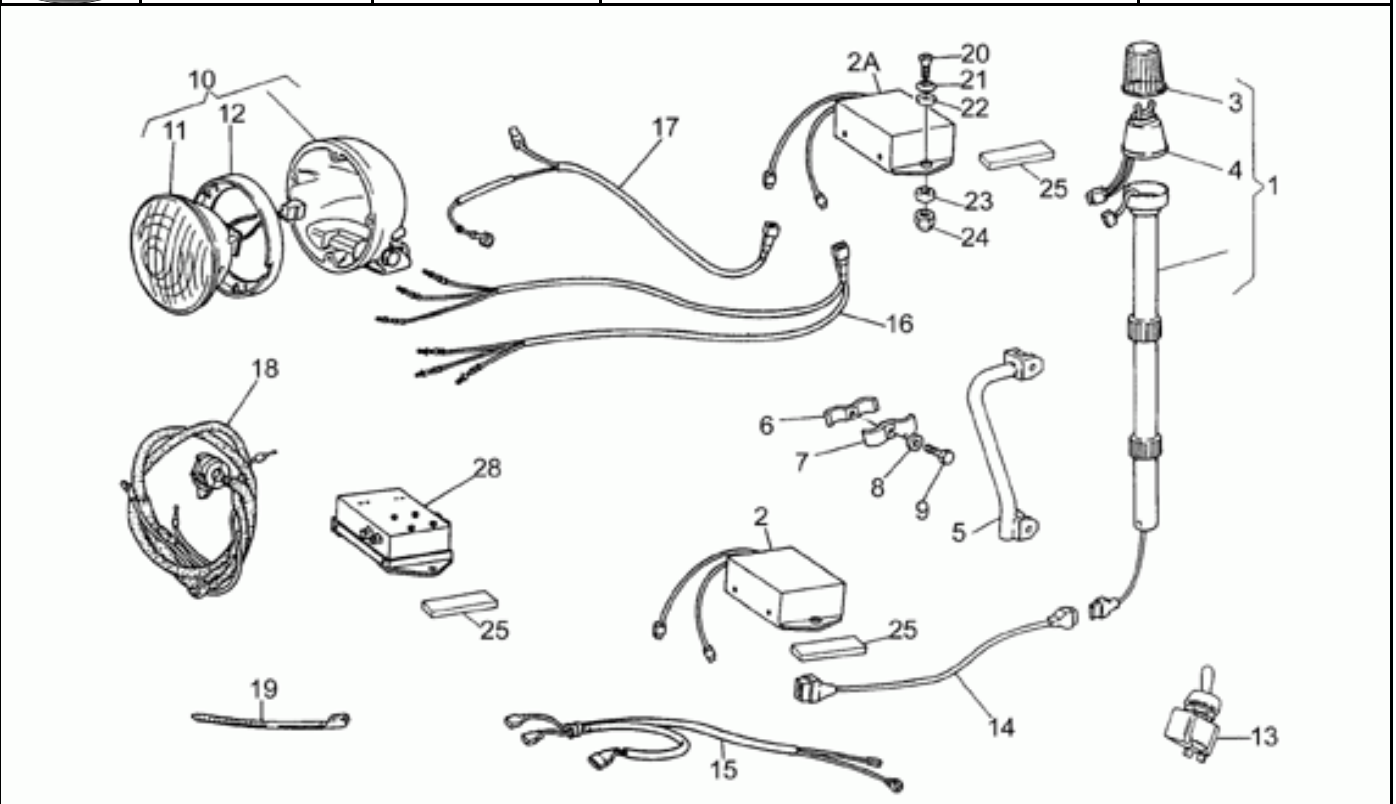

Ref.	Description	Year	I.M.	Country	Version	Code	Qty
1	Motorized strobo kit VAMA	-	-	-	-	28786245	1
2	Centrale 183 3CAN	-	-	-	-	23785990	1
	Centrale 2 CAN.	-	-	-	-	23737290	1
	Centrale VAMA 1A can.	-	-	-	-	28785945	1
3	Glace strobo	-	-	-	-	28798245	1
4	Lampe strobo	-	-	-	-	28798345	1
5	Support strobo	-	-	-	-	28785645	1
6	Cavalier	-	-	-	-	28786445	3
7	Cavalier	-	-	-	-	28786345	3
8	Rondelle spéciale	-	-	-	-	61013800	3
9	Vis	-	-	-	-	98074314	3
10	Front headlight BLU	-	-	-	-	31743338	2
11	Feu clignotant AV nu BLU	-	-	-	-	23743390	2
12	Cadre phare	-	-	-	-	23742890	2
13	Interrupteur	-	-	-	-	18745701	1
14	Câblage centr.-strobo 1can	-	-	-	-	23756991	1
15	Câblage centrale 1can	-	-	-	-	23757893	1
16	Câblage centr.feux clignotants 2can	-	-	-	-	23750991	1
17	Câblage centrale 2can	-	-	-	-	23757891	1
18	Câblage lumières bleues 3can	-	-	-	-	23726290	1
19	Collier	-	-	-	-	14609650	20
20	Vis	-	-	-	-	98250630	2
21	Rondelle	-	-	-	-	18577850	2
22	Joint torique	-	-	-	-	45212400	2
23	Cale	-	-	-	-	90716067	2
24	Ecrou M6x1	-	-	-	-	92630106	2
25	Joint	-	-	-	-	23785391	2

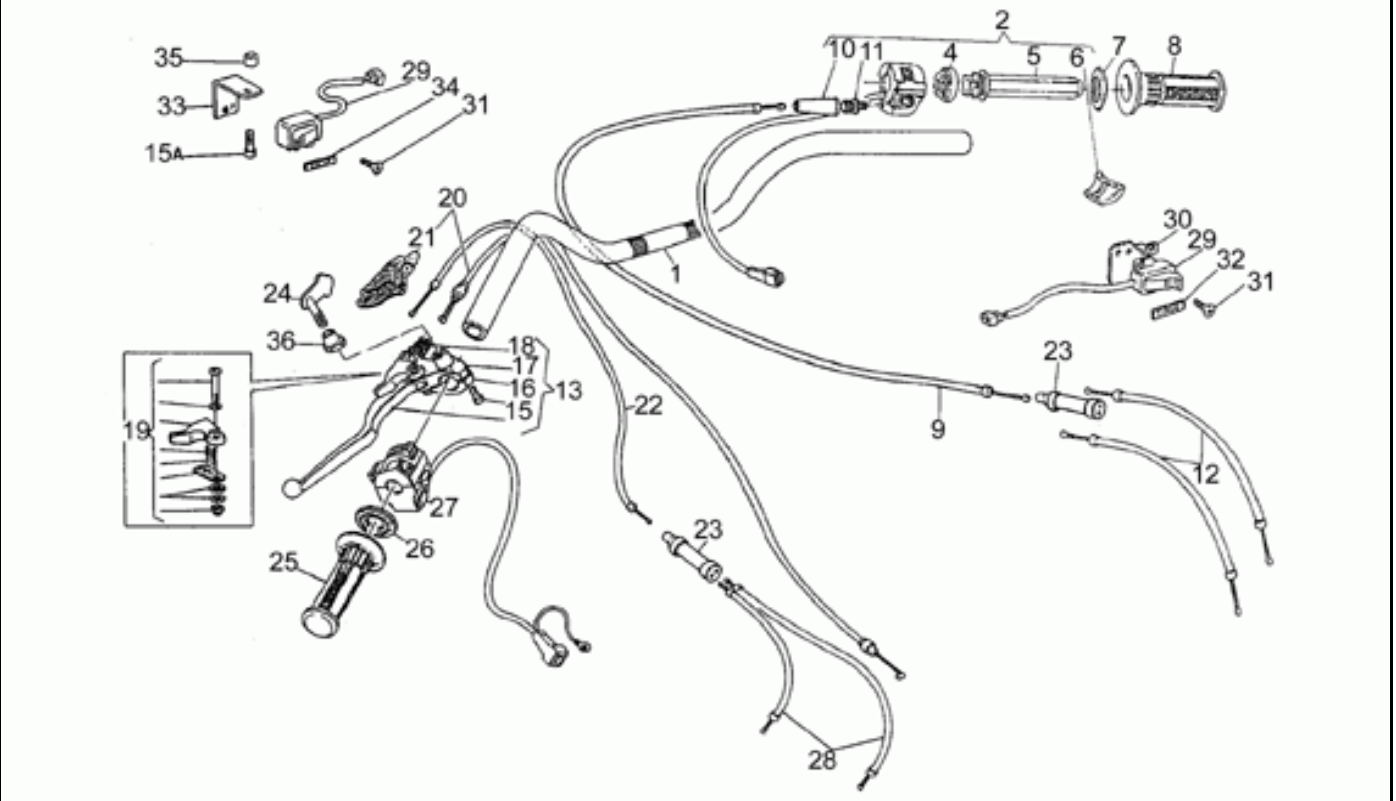

Ref.	Description	Year	I.M.	Country	Version	Code	Qty
1	Guidon	-	-	-	-	30600310	1
2	Commande gaz	-	-	-	-	27603400	1
4	Bloc conduite	-	-	-	-	27604415	1
5	Corps mobile	-	-	-	-	27603815	1
6	Guide-câble	-	-	-	-	27604515	1
7	Bague	-	-	-	-	27603620	1
8	Poignée dr.	-	-	-	-	19603515	1
9	Transm. commande gaz	-	-	-	-	27117536	1
10	Capuchon	-	-	-	-	27117615	1
11	Vis embrayage	-	-	-	-	27603715	1
12	Transmission	-	-	-	-	23117770	2
13	Levier embrayage complet	-	-	-	-	30605530	1
15	Vis	-	-	-	-	27601215	2
	Vis	-	-	-	-	98612225	1
16	Cavalier	-	-	-	-	27601015	1
17	Cavalier levier embr	-	-	-	-	27601815	1
18	Réglage	-	-	-	-	30602500	1
19	Levier	-	-	-	-	27659415	1
20	Câble embrayage	-	-	-	-	27093022	1
	Transmission embrayage POLIZIA	-	-	-	-	27093023	1
21	Protection	-	-	-	-	27663815	1
22	Câble starter	-	-	-	-	27132815	1
23	Dedoublereur	-	-	-	-	30607910	2
24	Support interrupteur	-	-	-	-	19504025	1
25	Poignée gc.	-	-	-	-	19603015	1
26	Bague	-	-	-	-	27603120	1
27	Déviateur feux gche	-	-	-	-	27738015	1
28	Câble starter	-	-	-	-	27133515	2
29	Interrupteur	-	-	-	-	19756315	2
30	Support droite	-	-	-	-	19756725	1
31	Vis taraud	-	-	-	-	99220207	2
32	Décalco int.sirène	-	-	-	-	19924825	1
33	Support gauche	-	-	-	-	19756715	1
34	Décalco int.lumières	-	-	-	-	19924815	1
35	Entretoise	-	-	-	-	91180607	1
36	Ecrou	-	-	-	-	19769625	1

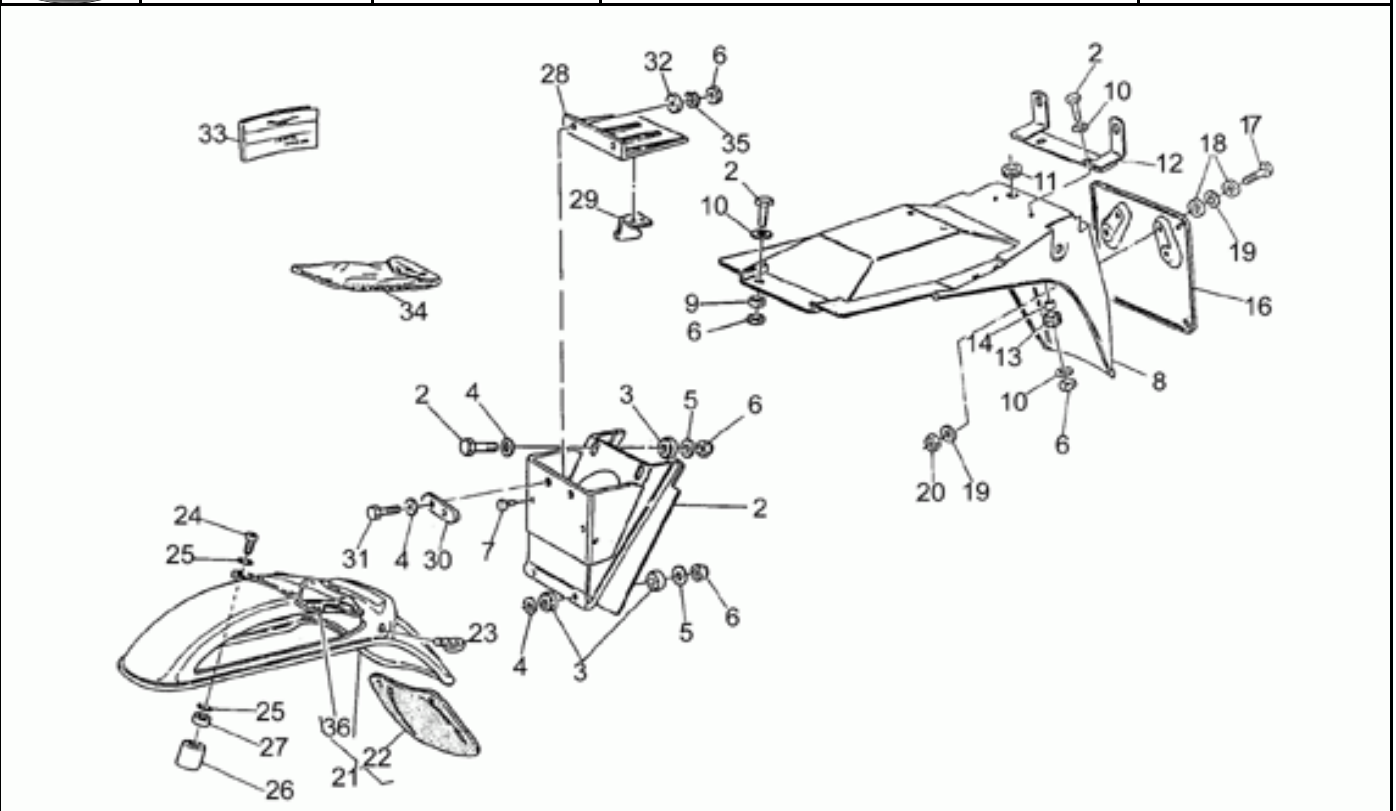

Ref.	Description	Year	I.M.	Country	Version	Code	Qty
1	Bavette anti-éclaboussures	-	-	-	-	23438690	1
	Bavette anti-éclaboussures	-	-	-	Aed	20438720	1
2	Vis M6X20	-	-	-	-	98054320	6
3	Caoutchouc	-	-	-	-	93110060	8
4	Rondelle	-	-	-	-	95000206	6
5	Rondelle 6,5x20x2	-	-	-	-	95100141	4
6	Ecrou M6x1	-	-	-	-	92630106	10
7	Tampon	-	-	-	-	19705900	2
8	Garde-boue Ar.	-	-	-	-	19437015	1
9	Caoutchouc	-	-	-	-	93110082	2
10	Rondelle 6,15x11x0,8	-	-	-	-	95004206	8
11	Caoutchouc pass.câble	-	-	-	-	91551092	1
12	Support phare AR	-	-	-	-	27474385	1
13	Caoutchouc	-	-	-	-	91551085	2
14	Entretoise	-	-	-	-	91180607	2
16	Porte-plaque	-	-	-	-	14474650	1
17	Vis	-	-	-	-	98052220	4
18	Cale	-	-	-	-	90716057	8
19	Rondelle 5,25x14x1,5	-	-	-	-	95100059	8
20	Ecrou	-	-	-	-	92630105	4
21	Garde-boue AV. bleu	-	-	-	ap	89000253	1
	Garde-boue Av.	-	-	-	bi	31434382	1
	Garde-boue av.brut	-	-	-	gr	274344201	1
22	Bavette anti-éclaboussures	-	-	-	-	27436920	1
23	Oeillet	-	-	-	-	28659740	1
24	Vis	-	-	-	-	98230845	4
25	Joint torique	-	-	-	-	90706092	8
26	Entretoise	-	-	-	-	31436415	4
27	Douille	-	-	-	-	28436460	4
28	Plaque fix. Centrale	-	-	-	-	23439010	1
29	Support	-	-	-	-	23438510	2
30	Plaquette	-	-	-	-	23439210	1
31	Vis	-	-	-	-	98054312	2
32	Rondelle	-	-	-	-	95100118	2
33	Man. instr/entr-F-	-	-	-	-	19900015	1
34	Trousse à outils	-	-	-	-	28929940	1
35	Rondelle évent.	-	-	-	-	95021106	2
36	Plaque de stabilisation	-	-	-	-	27436605	1

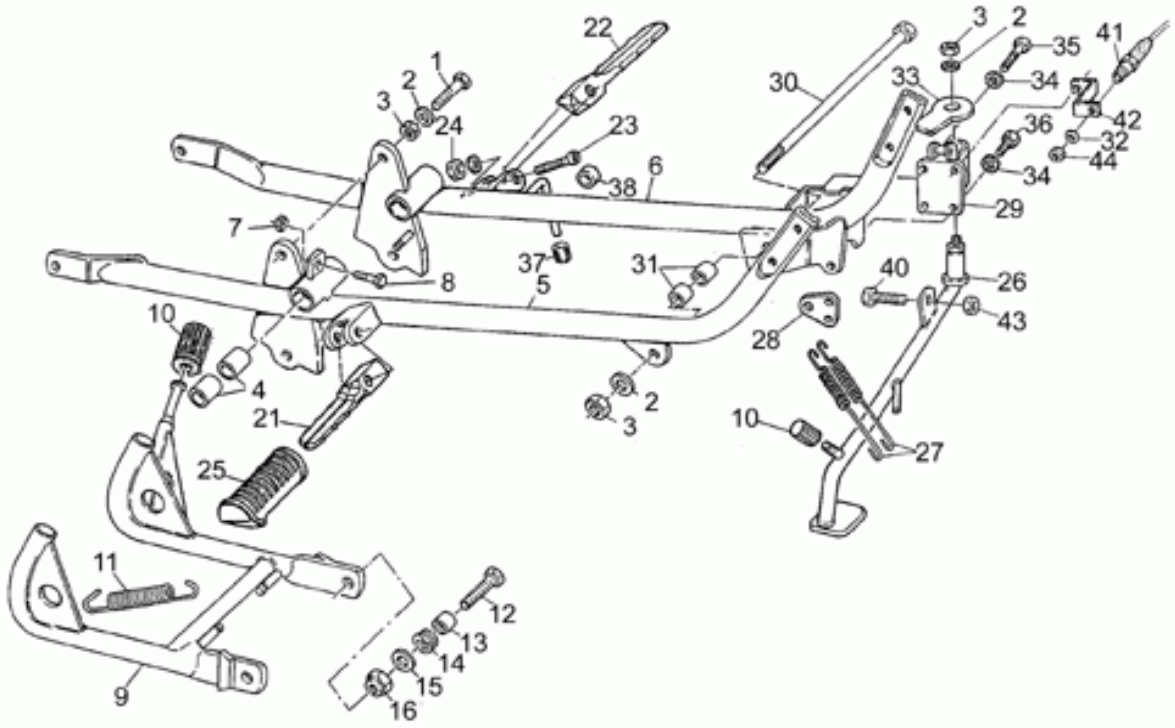

Ref.	Description	Year	I.M.	Country	Version	Code	Qty
1	Vis	-	-	-	-	98052565	2
2	Rondelle 10,2x18x2	-	-	-	-	95004210	5
3	Ecrou	-	-	-	-	92602210	5
4	Douille 18 mm est.	-	-	-	-	28252060	4
5	Bras d.	-	-	-	-	19420315	1
6	Bras g.	-	-	-	-	19422115	1
7	Ecrou	-	-	-	-	92602206	1
8	Vis M6X22	-	-	-	-	98054322	1
9	Béquille centrale	-	-	-	-	23430391	1
10	Pédale en caoutch.	-	-	-	-	13432640	2
11	Ressort rappel béq.	-	-	-	-	12434001	2
12	Vis	-	-	-	-	98054530	2
13	Entretoise	-	-	-	-	91181114	2
14	Ressort	-	-	-	-	94322215	1
15	Rondelle	-	-	-	-	95000210	2
16	Ecrou M10x1,5	-	-	-	-	92630510	2
21	Tuyau rep.-pieds av.d.	-	-	-	-	28440760	1
22	Tuyau rep.-pieds av.g.	-	-	-	-	28441860	1
23	Vis	-	-	-	-	98053435	2
24	Ecrou	-	-	-	-	92602208	2
25	Pédale en caoutch.	-	-	-	-	28443201	2
26	Bras latérale noire	-	-	-	-	19432016	1
27	Ressort	-	-	-	-	19434069	2
28	Plaque	-	-	-	-	18432760	1
29	Bloc	-	-	-	-	13433440	1
30	Pivot M10x250	-	-	-	-	53429500	1
31	Bague	-	-	-	-	19017000	2
32	Rondelle élastique	-	-	-	-	61270300	4
33	Arrêt	-	-	-	-	13432741	1
34	Rondelle élastique	-	-	-	-	95021108	4
35	Vis	-	-	-	-	98052440	1
36	Vis M8X16	-	-	-	-	98054416	3
37	Caoutchouc	-	-	-	-	14423800	1
38	Tampon	-	-	-	-	12433000	1
40	Vis	-	-	-	-	98054216	1
41	Interrupteur embrayage	-	-	-	-	29759150	1
42	Bride	-	-	-	-	29433850	1
43	Ecrou	-	-	-	-	92602205	1
44	Ecrou M8X1	-	-	-	-	92602508	1

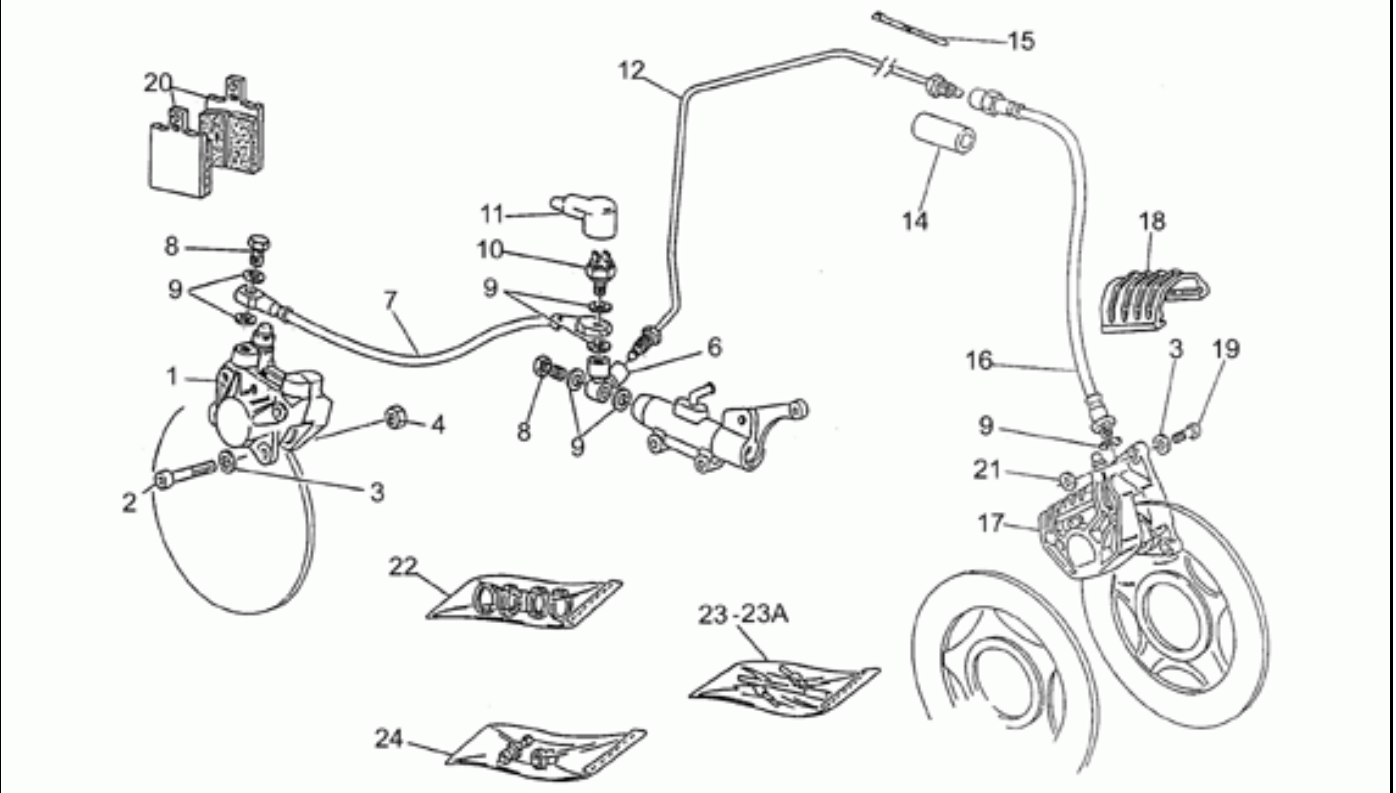

Ref.	Description	Year	I.M.	Country	Version	Code	Qty
1	Pince frein arrière	-	-	-	-	23653011	1
2	Vis	-	-	-	-	98622422	2
3	Rondelle élastique	-	-	-	-	61270300	2
4	Ecrou	-	-	-	-	92602208	2
6	Raccord	-	-	-	-	19668000	1
7	Tube frein	-	-	-	-	19658660	1
8	Vis spéciale	-	-	-	-	95990028	2
9	Joint 1mm	-	-	-	-	25656100	7
10	Interrupteur stop	-	-	-	-	14657050	1
11	Capuchon	-	-	-	-	12735100	1
12	Tuyau	-	-	-	-	19658735	1
14	Protection	-	-	-	-	17573860	1
15	Collier	-	-	-	-	14609650	3
16	Tube frein	-	-	-	-	17658860	1
17	Pince frein AV G	-	-	-	-	31652265	1
18	Couvercle pince frein BREMBO	-	-	-	-	39654700	1
	Couvercle pince frein GRIMECA	-	-	-	-	31654765	1
19	Vis	-	-	-	-	98622422	2
20	Plaquettes-paire BREMBO	-	-	-	-	27654610	2
	Plaquettes-paire GRIMECA	-	-	-	-	31654665	2
21	Rondelle	-	-	-	-	95100250	1
	Rondelle 8,5X18X0,8	-	-	-	-	95100251	1
22	Kit révision pince BREMBO	-	-	-	-	39659000	2
	Kit révision pince GRIMECA	-	-	-	-	31659065	2
23	Axes+ressort BREMBO	-	-	-	-	31659160	1
	Axes+ressort BREMBO	-	-	-	-	39659100	2
	Axes+ressort GRIMECA	-	-	-	-	31659165	1
24	Purge+capuchon BREMBO	-	-	-	-	31659260	1
	Purge+capuchon BREMBO	-	-	-	-	65659200	1
	Purge+capuchon GRIMECA	-	-	-	-	31659265	1

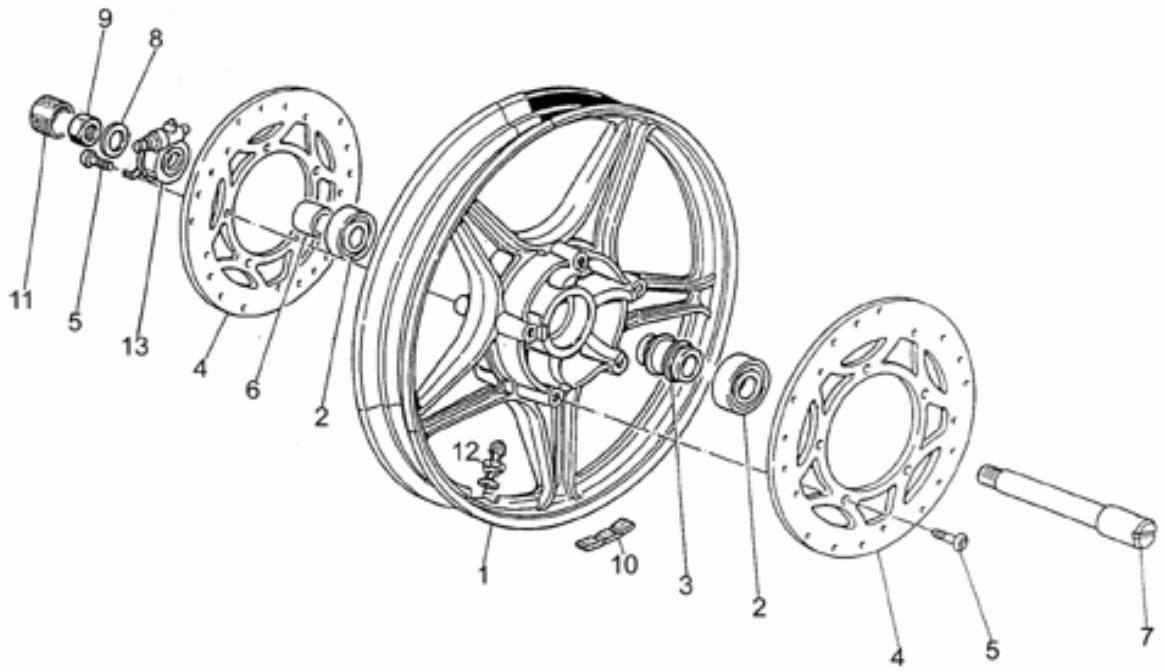

Ref.	Description	Year	I.M.	Country	Version	Code	Qty
1	Roue avant grise	-	-	-	-	14610370	1
2	Roulement	-	-	-	-	92204221	2
3	Entretoise interne roulements	-	-	-	-	17615360	1
4	Disque frein	-	-	-	-	28613300	2
5	Vis	-	-	-	-	98230825	10
6	Entretoise	-	-	-	-	31616315	1
7	Axe de roue AV	-	-	-	-	28614100	1
8	Rondelle 17X27X2	-	-	-	-	95004217	1
9	Ecrou M16X1,5	-	-	-	-	92602516	1
10	Contrepoids	-	-	-	-	14616150	2
11	Bouchon	-	-	-	-	62616800	2
12	Soupape air	-	-	-	-	28617760	1
13	Renvoi compteur km	-	-	-	-	31762561	1

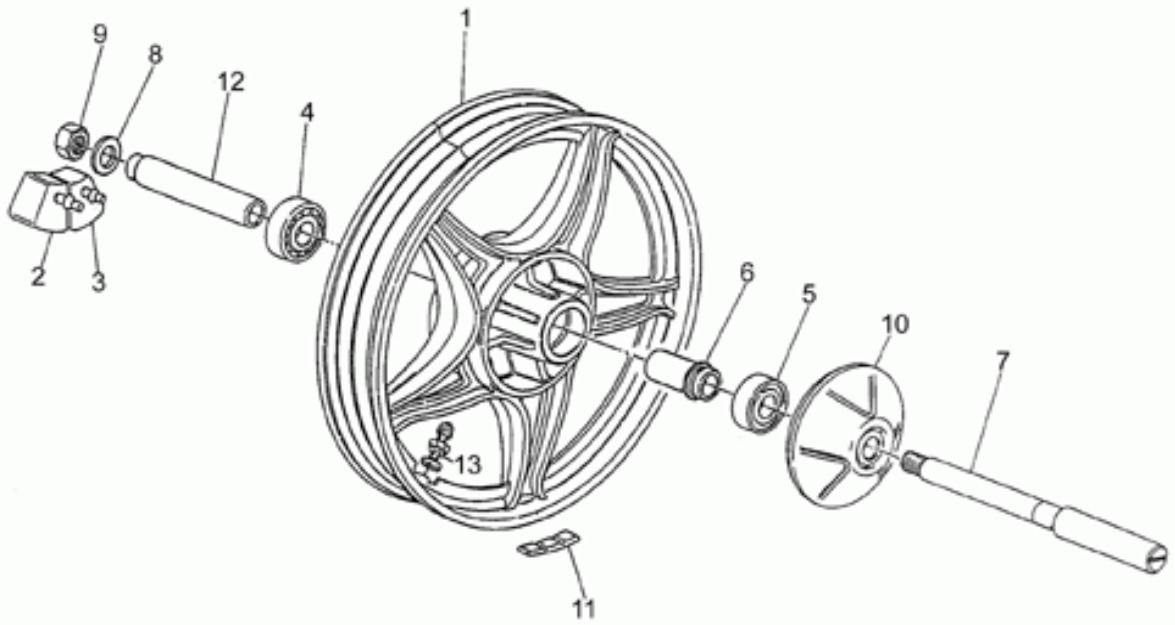

Ref.	Description	Year	I.M.	Country	Version	Code	Qty
1	Roue arrière grise	-	-	-	-	20630620	1
2	Joint en caoutchouc d.	-	-	-	-	19632501	6
3	Joint en caoutchouc g.	-	-	-	-	19632502	6
4	Roulement	-	-	-	-	92204218	1
5	Roulement	-	-	-	-	92204217	1
6	Entretoise interne roulements	-	-	-	-	19633935	1
7	Axe de roue AR	-	-	-	-	23633380	1
8	Rondelle	-	-	-	-	14634400	1
9	Ecrou	-	-	-	-	92602316	1
10	Protection	-	-	-	-	19636400	1
11	Contrepoids	-	-	-	-	14616150	1
12	Entretoise	-	-	-	-	19634100	1
13	Soupape air	-	-	-	-	28617760	1

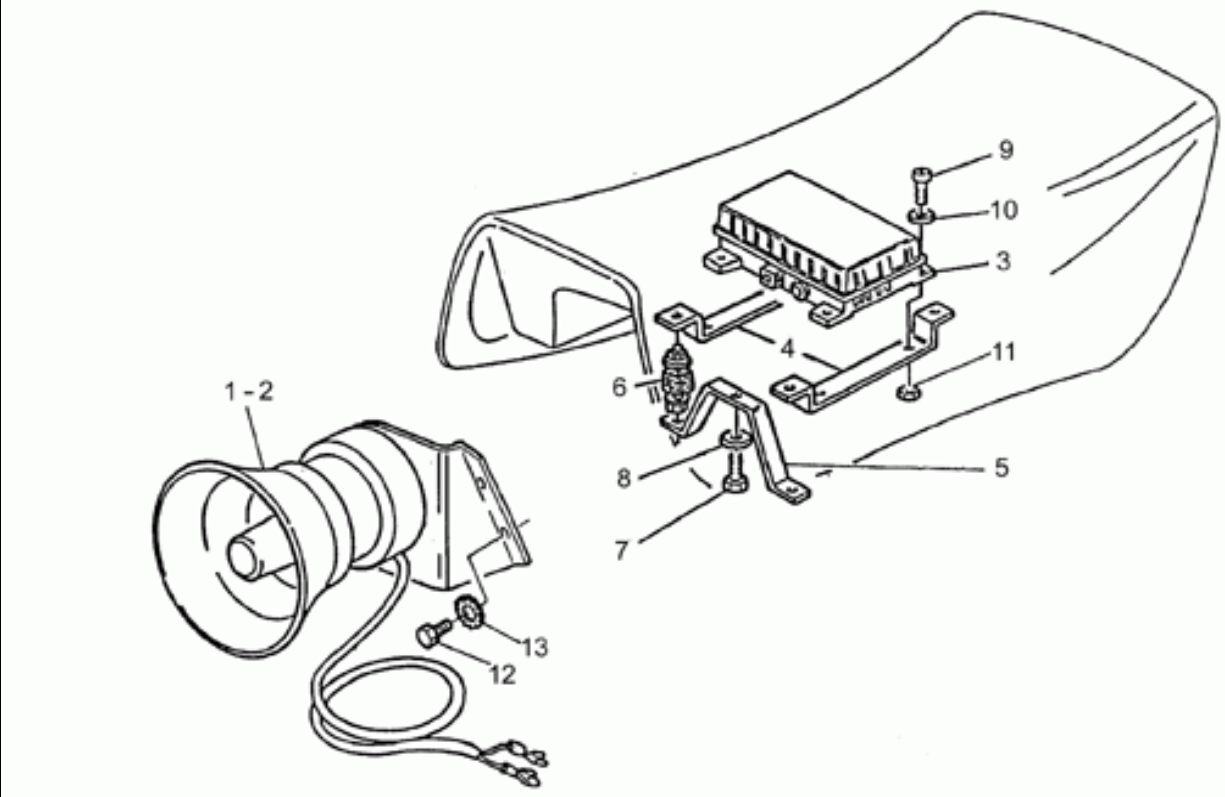

Ref.	Description	Year	I.M.	Country	Version	Code	Qty
1	RH siren cpl.	-	-	-	-	19743615	1
2	LH siren cpl.	-	-	-	-	19743616	1
3	Centrale électronique	-	-	-	-	28737680	1
4	Support	-	-	-	-	28737880	2
5	Cavalier	-	-	-	-	28736780	2
6	Silentbloc	-	-	-	-	17737983	4
7	Vis	-	-	-	-	98054212	2
8	Rondelle 5,25x14x1,5	-	-	-	-	95100059	2
9	Vis	-	-	-	-	98200412	4
10	Rondelle	-	-	-	-	95000204	4
11	Ecrou M4x0,7	-	-	-	-	92630104	4
12	Vis M8X16	-	-	-	-	98054416	4
13	Rondelle élastique	-	-	-	-	95021108	4

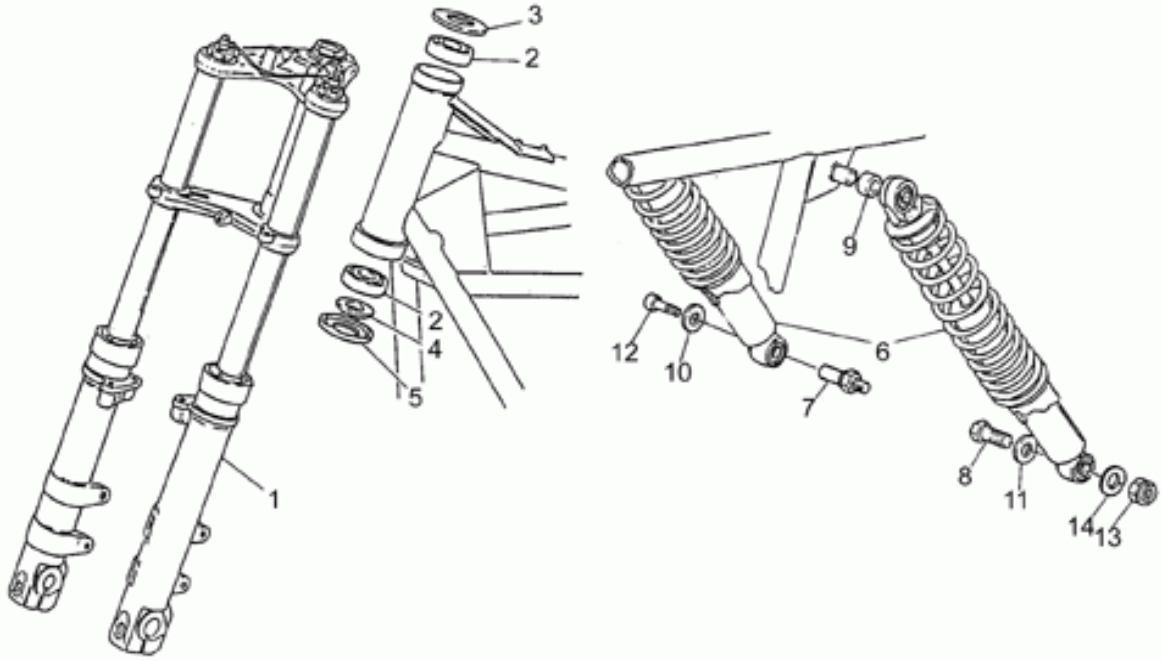

Ref.	Description	Year	I.M.	Country	Version	Code	Qty
1	Fourche avant grise	-	-	-	-	19490225	1
2	Roulement roul.con.	-	-	-	-	92249225	2
3	Rondelle	-	-	-	-	14494600	1
4	Rondelle d'appui	-	-	-	-	14516700	1
5	Pare-poussière	-	-	-	-	14517000	1
6	Amortisseur	-	-	-	-	28550263	2
	Amortisseur BITUBO	-	-	-	-	20550220	2
7	Pivot	-	-	-	-	23555281	1
8	Pivot	-	-	-	-	23555280	1
9	Entretoise	-	-	-	-	91181407	2
10	Entretoise	-	-	-	-	95100235	1
11	Rondelle	-	-	-	-	95100256	1
12	Vis	-	-	-	-	98822416	1
13	Ecrou	-	-	-	-	92602410	1
14	Rondelle	-	-	-	-	95129180	1

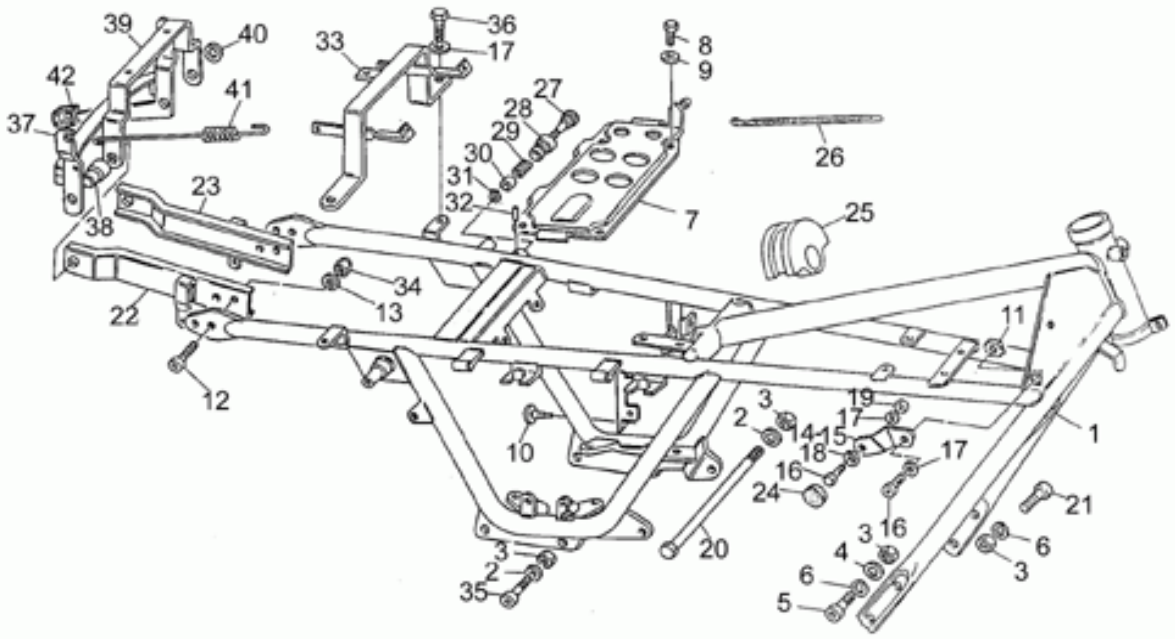

Ref.	Description	Year	I.M.	Country	Version	Code	Qty
1	Chassis	-	-	-	-	19400115	1
	Chassis	-	-	-	Aed	19400116	1
2	Rondelle 10,2x18x2	-	-	-	-	95004210	5
3	Ecrou	-	-	-	-	92602210	7
4	Rondelle évent.	-	-	-	-	95021110	4
5	Vis 25mm	-	-	-	-	98622525	2
6	Rondelle	-	-	-	-	95120105	4
7	Plaque	-	-	-	-	19418200	1
8	Vis	-	-	-	-	98054418	4
9	Rondelle	-	-	-	-	95004208	4
10	Tampon	-	-	-	-	19705900	4
11	Ecrou en cage	-	-	-	-	92660601	2
12	Vis M8X16	-	-	-	-	98054416	4
13	Rondelle élastique	-	-	-	-	61270300	4
14	Support droite	-	-	-	-	23401290	1
15	Support gauche	-	-	-	-	23401390	1
16	Vis M6X16	-	-	-	-	98054316	4
17	Rondelle 6,15x11x0,8	-	-	-	-	95004206	4
18	Disque	-	-	-	-	39103500	2
19	Ecrou M6x1	-	-	-	-	92630106	2
20	Pivot M10x205	-	-	-	-	98110199	1
21	Vis M10X40	-	-	-	-	98620540	2
22	Support droite	-	-	-	-	23439190	1
23	Support gauche	-	-	-	-	23439290	1
24	Tampon	-	-	-	-	39103400	2
25	Tampon	-	-	-	-	14107100	1
26	Collier	-	-	-	-	14609650	1
27	Poignée	-	-	-	-	28463045	1
28	Douille	-	-	-	-	28462945	1
29	Ressort	-	-	-	-	94321119	1
30	Entretoise	-	-	-	-	28462645	1
31	Bague de butée	-	-	-	-	90280006	1
32	Tige filetée	-	-	-	-	35782880	1
33	Support radio	-	-	-	-	28463545	1
34	Ecrou	-	-	-	-	92602208	4
35	Vis	-	-	-	-	98052555	2
36	Vis	-	-	-	-	98054318	2
37	Dispositif décrochage	-	-	-	-	23478890	1
38	Entretoise	-	-	-	-	41432100	2
39	Support radio	-	-	-	-	23463690	1
40	Entretoise	-	-	-	-	91180810	2
41	Ressort	-	-	-	-	19434000	2
42	Caoutchouc	-	-	-	-	14461400	1

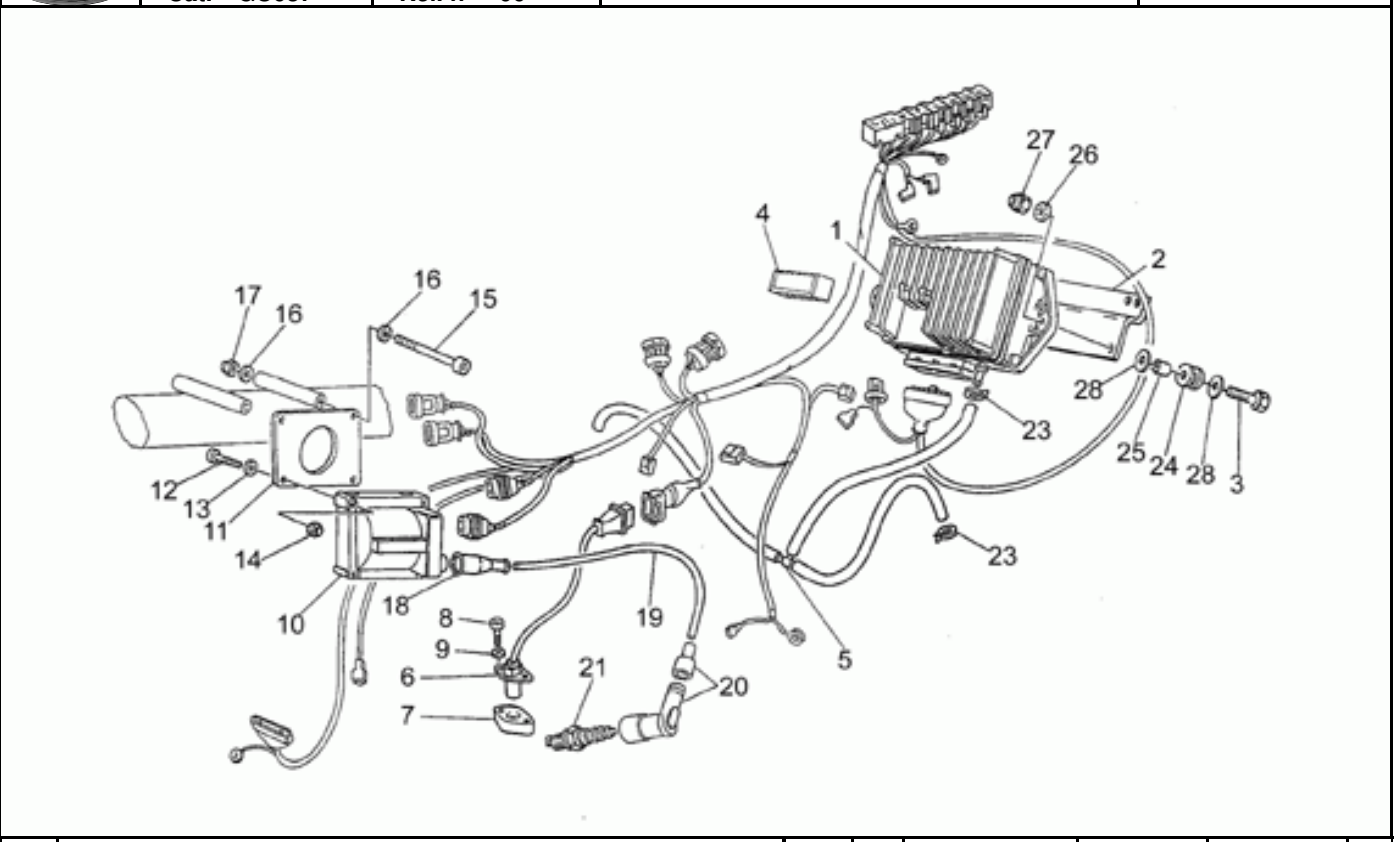

Ref.	Description	Year	I.M.	Country	Version	Code	Qty
1	Centrale MED 501A	-	-	-	-	31721465	1
2	Support	-	-	-	-	20723820	1
3	Vis	-	-	-	-	98230622	2
4	Plaquette antivibratile	-	-	-	-	19025300	2
5	Conduite doìte auxt.d'aspirat.	-	-	-	-	20108120	1
6	Capteur phase/tours	-	-	-	-	20721610	1
7	Bride	-	-	-	-	31722065	1
8	Vis	-	-	-	-	98620222	2
9	Rondelle	-	-	-	-	95004205	2
10	Bobine HT	-	-	-	-	30716500	2
11	Support bobine	-	-	-	-	20716720	2
12	Vis	-	-	-	-	98610125	4
13	Rondelle	-	-	-	-	95004204	4
14	Ecrou M4x0,7	-	-	-	-	92630104	4
15	Vis	-	-	-	-	98620360	2
16	Rondelle 6,15x11x0,8	-	-	-	-	95004206	4
17	Ecrou M6x1	-	-	-	-	92630106	2
18	Capuchon	-	-	-	-	14717600	2
19	Câble haute tension	-	-	-	-	17718350	2
20	Pipe bougie NGK	-	-	-	-	30717410	2
21	Bougie NGK BR8ES	-	-	-	-	31717061	2
23	Collier	-	-	-	-	61108500	3
24	Caoutchouc	-	-	-	-	91551080	2
25	Entretoise	-	-	-	-	91180608	2
26	Rondelle	-	-	-	-	95000206	2
27	Ecrou M6x1	-	-	-	-	92630206	2
28	Rondelle	-	-	-	-	14217901	4

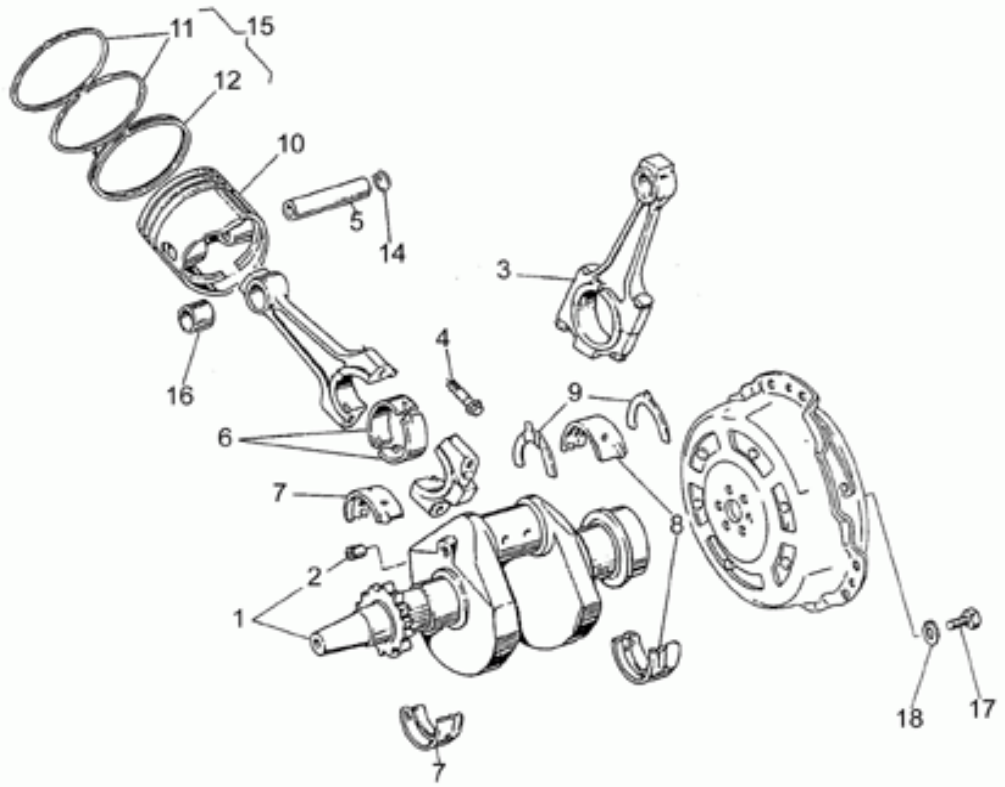

Ref.	Description	Year	I.M.	Country	Version	Code	Qty
1	Arbre moteur avec bouchon	-	-	-	-	19064181	1
2	Bouchon	-	-	-	-	19065400	1
3	Bielle	-	-	-	-	19061521	2
4	Vis	-	-	-	-	19062221	4
5	Axe	-	-	-	-	19061280	2
6	Demi-coussinet	-	-	-	-	19062022	4
7	Demi-couss.de vilebr.av.	-	-	-	-	19065623	2
8	Demi-couss.de vilebr.ar.	-	-	-	-	19066522	2
9	Butée	-	-	-	-	31066480	2
10	Piston	-	-	-	-	19060481	2
11	Segment	-	-	-	-	19060750	4
12	Segm.racleur d'huile	-	-	-	-	19061050	2
14	Bague de butée	-	-	-	-	19061320	4
15	Série segments	-	-	-	-	19060650	2
16	Bague	-	-	-	-	19061821	2
17	Vis	-	-	-	-	19067700	6
18	Rondelle	-	-	-	-	14615901	6

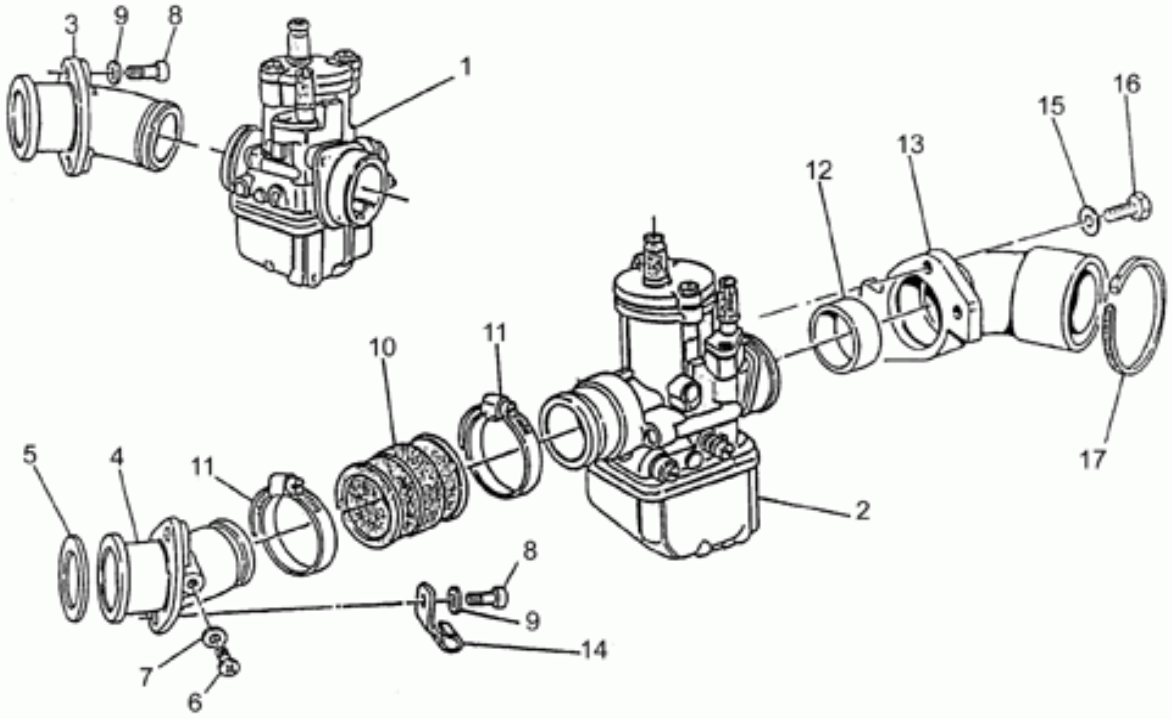

Ref.	Description	Year	I.M.	Country	Version	Code	Qty
1	Carburateur droit PHBH 28 BD	-	-	-	-	19112680	1
2	Carburateur gauche PHBH 28 BS	-	-	-	-	19112681	1
3	Collecteur d. brut DIGIPLEX	-	-	-	-	19115082	1
	Collecteur d. brut MOTOPLAT	-	-	-	-	19115080	1
	Collecteur d. gris DIGIPLEX	-	-	-	-	19115084	1
4	Collecteur g. brut DIGIPLEX	-	-	-	-	19115083	1
	Collecteur g. brut MOTOPLAT	-	-	-	-	19115081	1
	Collecteur g. gris DIGIPLEX	-	-	-	-	19115085	1
5	Joint	-	-	-	-	19115580	2
6	Vis	-	-	-	-	98310610	2
7	Rondelle	-	-	-	-	95100116	2
8	Vis	-	-	-	-	98822325	4
9	Rondelle spéciale	-	-	-	-	61013800	4
10	Manchon	-	-	-	-	19114360	2
11	Collier 32X52X8	-	-	-	-	93305032	4
12	Bague d'étanchéité	-	-	-	-	19114680	2
13	Collecteur	-	-	-	-	19114480	2
14	Collier	-	-	-	-	19718000	2
15	Rondelle	-	-	-	-	95004205	4
16	Vis	-	-	-	-	98054214	4
17	Collier	-	-	-	-	14609650	2

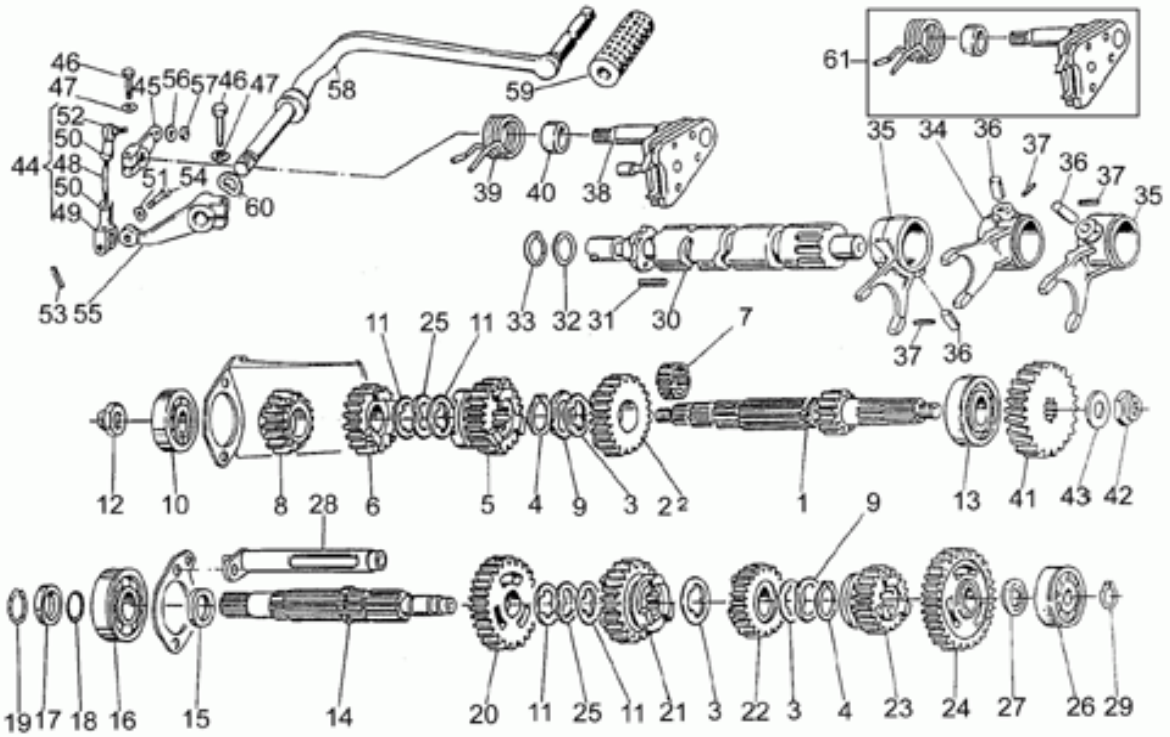

Ref.	Description	Year	I.M.	Country	Version	Code	Qty
1	Arbre primaire Z=11	-	-	-	-	23210570	1
2	Engrenage 5a AP Z=20	-	-	-	-	23212070	1
3	Rondelle éventail	-	-	-	-	19215460	3
4	Bague seeger	-	-	-	-	90271127	2
5	Engrenage 4a AP Z=18	-	-	-	-	19211861	1
6	Engrenage 3a AP Z=18	-	-	-	-	19211460	1
7	Cage à rouleaux	-	-	-	-	92251023	1
8	Engrenage 2a AP Z=14	-	-	-	FN2	23211372	1
	Engrenage 2a AP Z=14	-	-	-	TN2	19211361	1
9	Rondelle	-	-	-	-	19218062	2
10	Roulement AP	-	-	-	-	92218417	1
11	Rondelle d'appui	-	-	-	-	19214660	4
12	Ecrou	-	-	-	-	10054100	1
13	Roulement AP	-	-	-	-	92230320	1
14	Arbre secondaire	-	-	-	-	19213661	1
15	Entretoise	-	-	-	-	19212900	1
16	Roulement AS	-	-	-	-	92201220	1
17	Entretoise	-	-	-	-	19213720	1
18	Bague d'étanchéité 18,77X1,78	-	-	-	-	90706188	1
19	Bague seeger	-	-	-	-	90271121	1
20	Engrenage 2a AS Z=23	-	-	-	FN2	23214572	1
	Engrenage 2a AS Z=23	-	-	-	TN2	23214571	1
21	Engrenage 3a AS Z=23	-	-	-	-	19214860	1
22	Engrenage 4a AS Z=19	-	-	-	-	19215161	1
23	Engrenage 5a AS Z=18	-	-	-	-	23215270	1
24	Engrenage 1a AS Z=26	-	-	-	-	23214071	1
25	Rondelle	-	-	-	-	19218061	2
26	Roulement	-	-	-	-	92234716	1
27	Cale 1,7 mm	-	-	-	-	10214301	1
	Cale 1,8 mm	-	-	-	-	10214302	1
	Cale 1,9 mm	-	-	-	-	10214303	1
	Cale 2,1 mm	-	-	-	-	10214305	1
	Rondelle 2 mm	-	-	-	-	10214304	1
28	Egouttoir	-	-	-	-	23202074	1
29	Bague seeger	-	-	-	-	90271117	1
30	Desmodromique	-	-	-	-	19234420	1
31	Tige	-	-	-	-	19234600	4
32	Cale 1 mm	-	-	-	-	19355300	1
33	Anneau élastique	-	-	-	-	90271020	1
34	Fourchette AP	-	-	-	-	19231220	1
35	Fourchette AS	-	-	-	-	19231020	2
36	Rouleau	-	-	-	-	92297909	3
37	Goupille	-	-	-	-	95520316	3

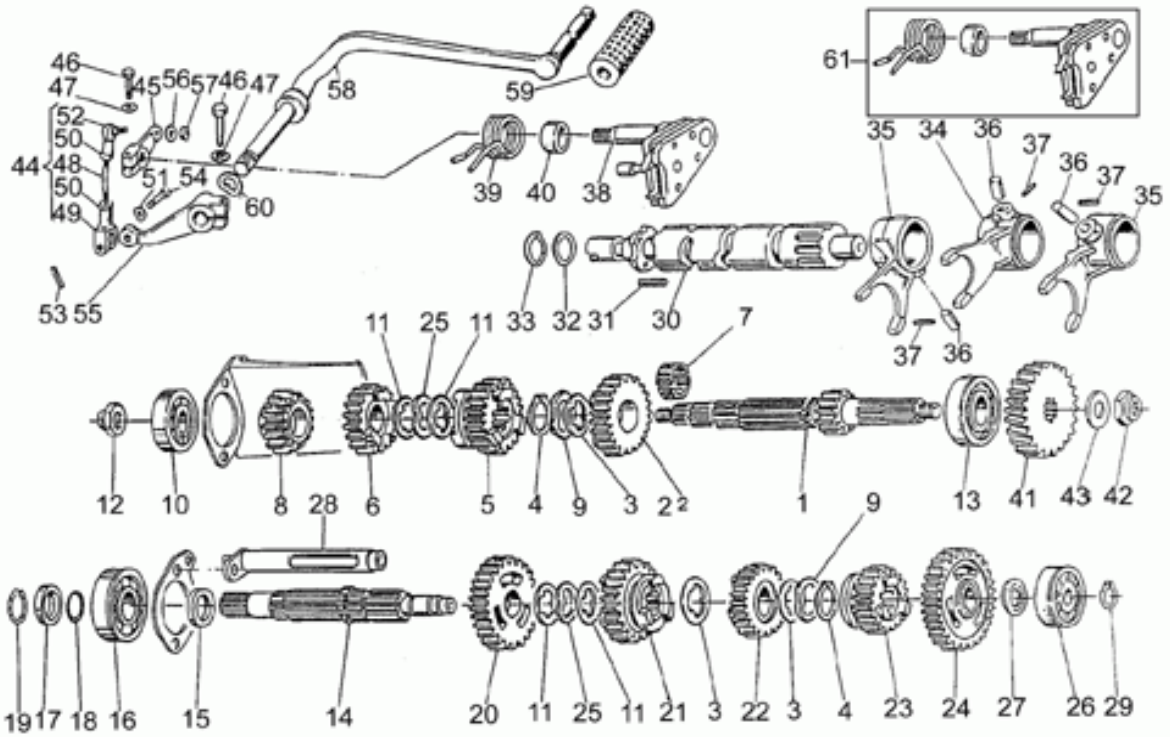

Ref.	Description	Year	I.M.	Country	Version	Code	Qty
38	Preselecteur complet	-	-	-	FN1	20236220	1
39	Ressort	-	-	-	FN1	28238261	1
	Ressort	-	-	-	TN1	61238200	1
40	Entretoise	-	-	-	FN1	20208520	1
	Bague	-	-	-	TN1	91182010	1
41	Pignon interméd. Z=23	-	-	-	-	19211140	1
42	Ecrou	-	-	-	-	10054100	1
43	Rondelle d'appui	-	-	-	-	39238100	1
44	Tirant pour boite vitesse cpl.	-	-	-	-	19257701	1
45	Levier de commande	-	-	-	-	19258220	1
46	Vis	-	-	-	-	98052325	2
47	Rondelle évent.	-	-	-	-	95021106	2
48	Tirant	-	-	-	-	18257950	1
49	Fourchette	-	-	-	-	12626800	1
50	Ecrou	-	-	-	-	92602206	2
51	Rondelle	-	-	-	-	95129110	1
52	Rotule	-	-	-	-	18258101	1
53	Goupille	-	-	-	-	95500222	1
54	Goupille	-	-	-	-	95770265	1
55	Levier	-	-	-	-	19256920	1
56	Rondelle spéciale	-	-	-	-	61013800	1
57	Ecrou M6x1	-	-	-	-	92630106	1
58	Levier commande vitesses cpl.	-	-	-	-	19250900	1
59	Caoutchouc	-	-	-	-	14251001	1
60	Rondelle élastique	-	-	-	-	95129260	1
61	Kit présélecteur	-	-	-	-	20999520	1

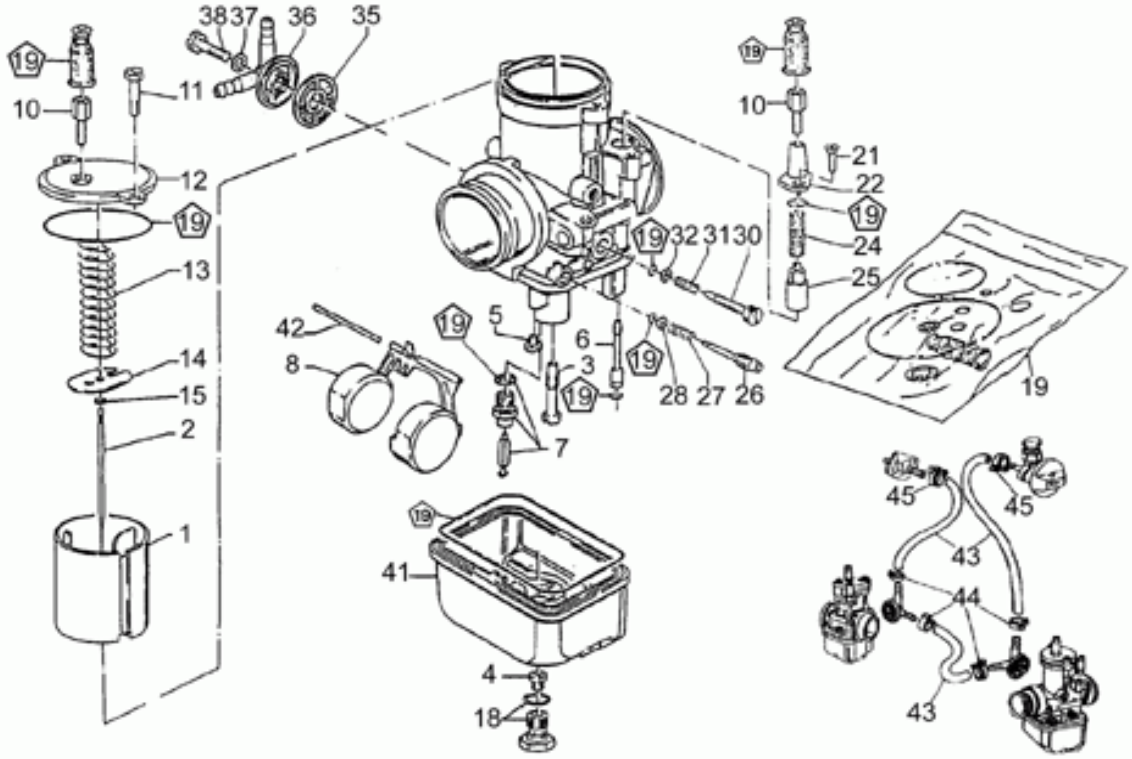

Ref.	Description	Year	I.M.	Country	Version	Code	Qty
1	Soupape gaz 50	-	-	-	-	19934880	2
2	Pointeau conique 6	-	-	-	-	19934980	2
3	Gicleur 268T	-	-	-	-	19935580	2
4	Jet maximum 118	-	-	-	-	19935780	2
5	Gicleur minimum 50	-	-	-	-	66935910	2
6	Jet démarrage 60	-	-	-	-	19936000	2
7	Vanne pointeau	-	-	-	-	19934600	2
8	Flotteur gr.9,5	-	-	-	-	27934315	2
10	Vis tendeur de fil	-	-	-	-	12937200	4
11	Vis	-	-	-	-	14934650	2
12	Couvercle	-	-	-	-	19935080	2
13	Ressort rappel soup.gaz	-	-	-	-	19937180	2
14	Plaquette	-	-	-	-	19938580	2
15	Agrafe pointeau conique	-	-	-	-	65933600	2
18	Bouchon fix.bac	-	-	-	-	27933720	2
19	Jeu de joints	-	-	-	-	19939980	1
21	Vis	-	-	-	-	13937900	2
22	Couvercle dispositif dém.	-	-	-	-	17937450	2
24	Ressort de soupape	-	-	-	-	39937600	2
25	Soupape de démarrage	-	-	-	-	13937800	2
26	Vis réglage minimum	-	-	-	-	13936200	2
27	Ressort	-	-	-	-	13936300	2
28	Rondelle plate	-	-	-	-	65933700	2
30	Vis réglage soupape gaz	-	-	-	-	13936600	2
31	Ressort	-	-	-	-	13936700	2
32	Rondelle plate	-	-	-	-	14931650	2
35	Filtre essence	-	-	-	-	43934000	2
36	Pipette racc. tuyau essence	-	-	-	-	31934680	2
37	Joint vis	-	-	-	-	13934700	2
38	Vis fix.pipette	-	-	-	-	10934900	2
41	Cuve aluminium	-	-	-	-	19934480	2
	Cuve plastica	-	-	-	-	31934460	2
42	Axe flotteur	-	-	-	-	13933100	2
43	Tuyau caoutchouc 12,5X7,8 5/16"	-	-	-	-	00823956080	1
44	Collier	-	-	-	-	28157950	4
45	Collier	-	-	-	-	28108410	2

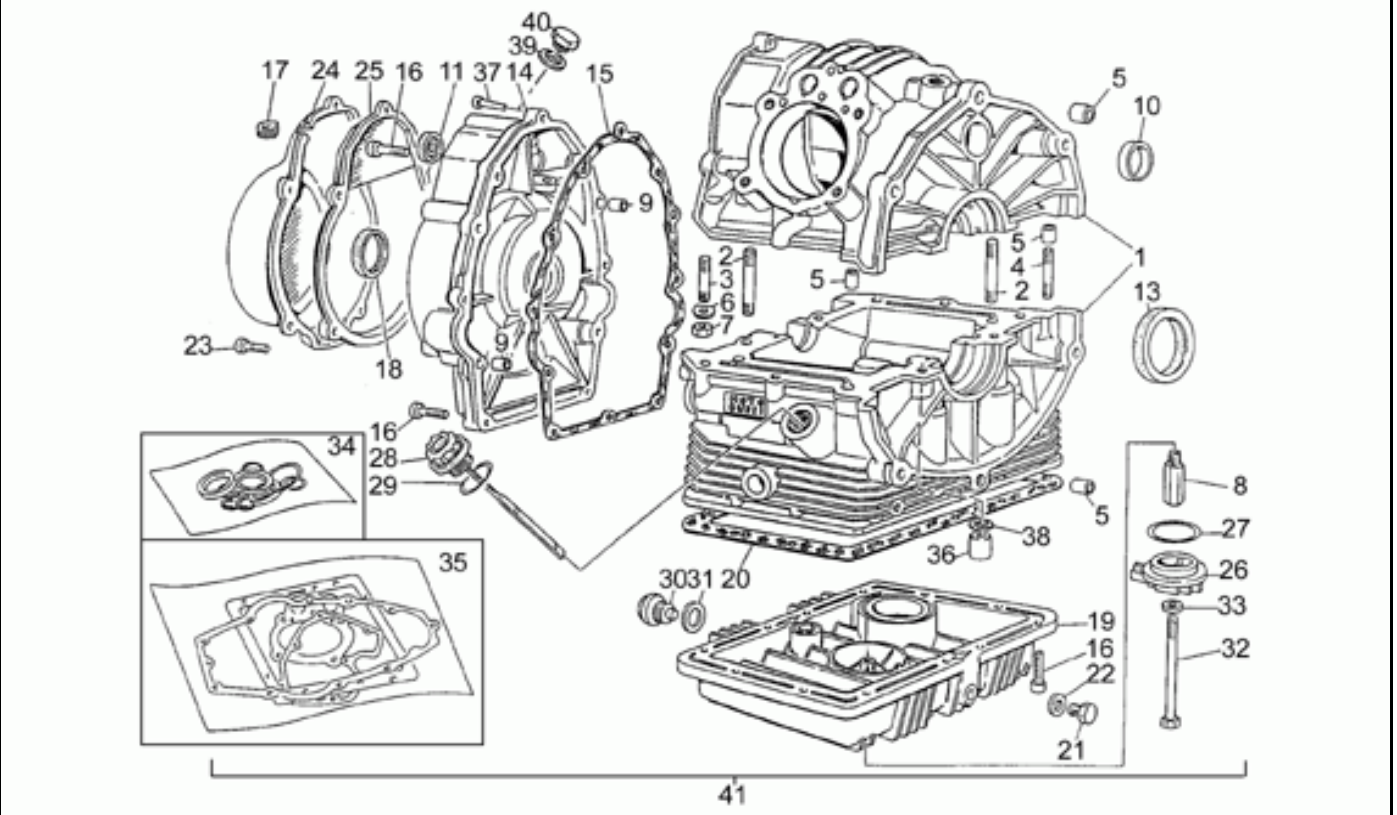

Ref.	Description	Year	I.M.	Country	Version	Code	Qty
1	Carter moteur brut	-	-	-	-	19000120	1
	Carter moteur grise	-	-	-	-	31000380	1
2	Vis sans tête	-	-	-	-	96451560	4
3	Vis sans tête	-	-	-	-	96451430	4
4	Vis sans tête	-	-	-	-	96508055	2
5	Bague	-	-	-	-	19015020	4
6	Rondelle élastique	-	-	-	-	61270300	6
7	Ecrou	-	-	-	-	92602208	6
8	Raccord	-	-	-	-	19003800	1
9	Bague	-	-	-	-	19002020	2
10	Bouchon	-	-	-	-	19016320	1
11	Bague d'étanchéité	-	-	-	-	90401530	1
13	Bague d'étanchéité	-	-	-	FN6	04000500	1
	Bague d'étanchéité	-	-	-	TN6	90405367	1
14	Couvercle distribution brut	-	-	-	-	19001420	1
	Couvercle gris	-	-	-	-	31001480	1
15	Joint	-	-	-	-	19001200	1
16	Vis M6X25	-	-	-	-	98622325	22
17	Caoutchouc	-	-	-	-	19007700	1
18	Bague d'étanchéité	-	-	-	-	90402840	1
19	Carter huile moteur brut	-	-	-	-	27003585	1
	Carter inférieur gris	-	-	-	-	20003520	1
20	Joint	-	-	-	-	19003602	1
21	Bouchon vid.huile	-	-	-	-	31003766	1
22	Garniture	-	-	-	-	10528900	1
23	Vis M6X35	-	-	-	-	98620335	5
24	Couvercle	-	-	-	-	27001636	1
25	Bride	-	-	-	-	27001136	1
26	Couvercle brut	-	-	-	-	19003400	1
	Petit couvercle gris	-	-	-	-	20003410	1
27	Joint torique	-	-	-	-	90706444	1
28	Bouchon rempl. huile	-	-	-	-	27004985	1
29	Bague d'étanchéité	-	-	-	-	90706282	1
30	Bouchon vid. huile magnétique	-	-	-	-	30205200	1
	Bouchon vid.huile	-	-	-	-	12003702	1
31	Joint	-	-	-	-	95100709	1
32	Boulon	-	-	-	-	27152885	1
33	Joint	-	-	-	-	12154200	1
34	Joint spy-série	-	-	-	-	19999580	1
35	Joints moteur-série	-	-	-	-	19999080	1
36	Ecrou colonne	-	-	-	-	13021900	4
37	Vis M6X30	-	-	-	-	98620330	2
38	Rondelle	-	-	-	-	95129180	4

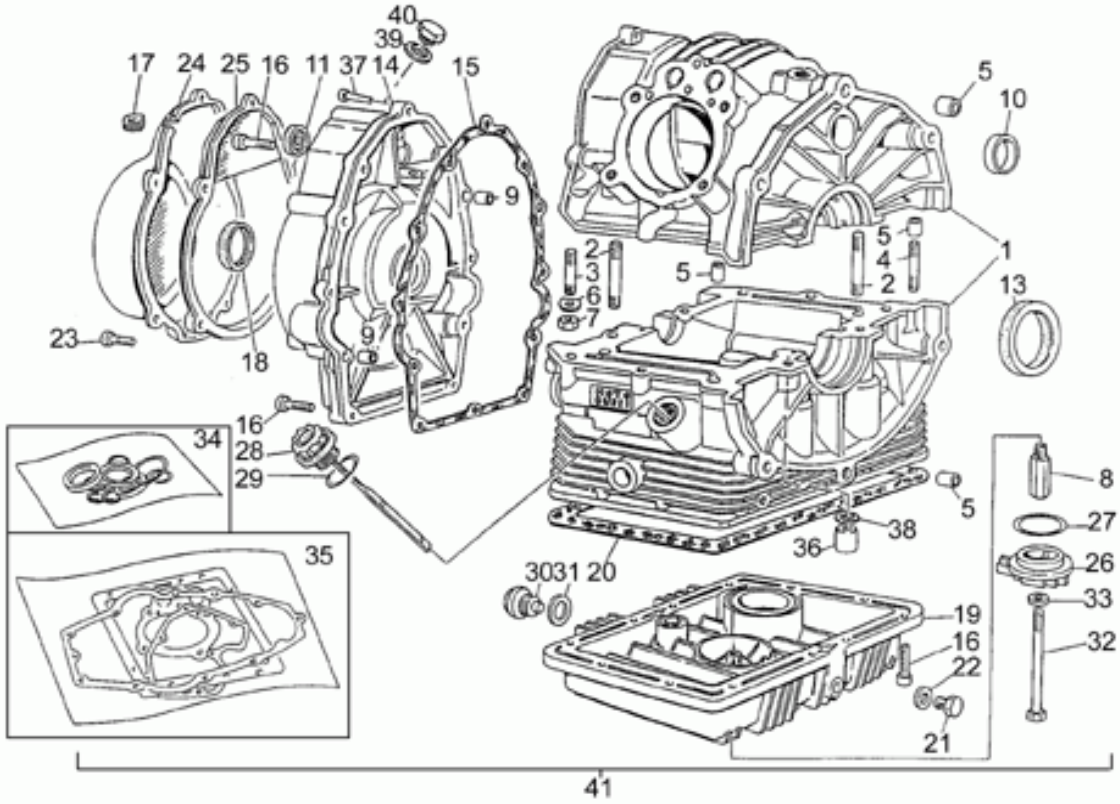

Ref.	Description	Year	I.M.	Country	Version	Code	Qty
39	Joint	-	-	-	-	10154200	1
40	Bouchon	-	-	-	-	95980119	1
41	Moteur sans boîte de v. DIGIPLEX	-	-	-	-	19991082	1
	Moteur sans boîte de v. MOTOPLAT	-	-	-	-	19991081	1

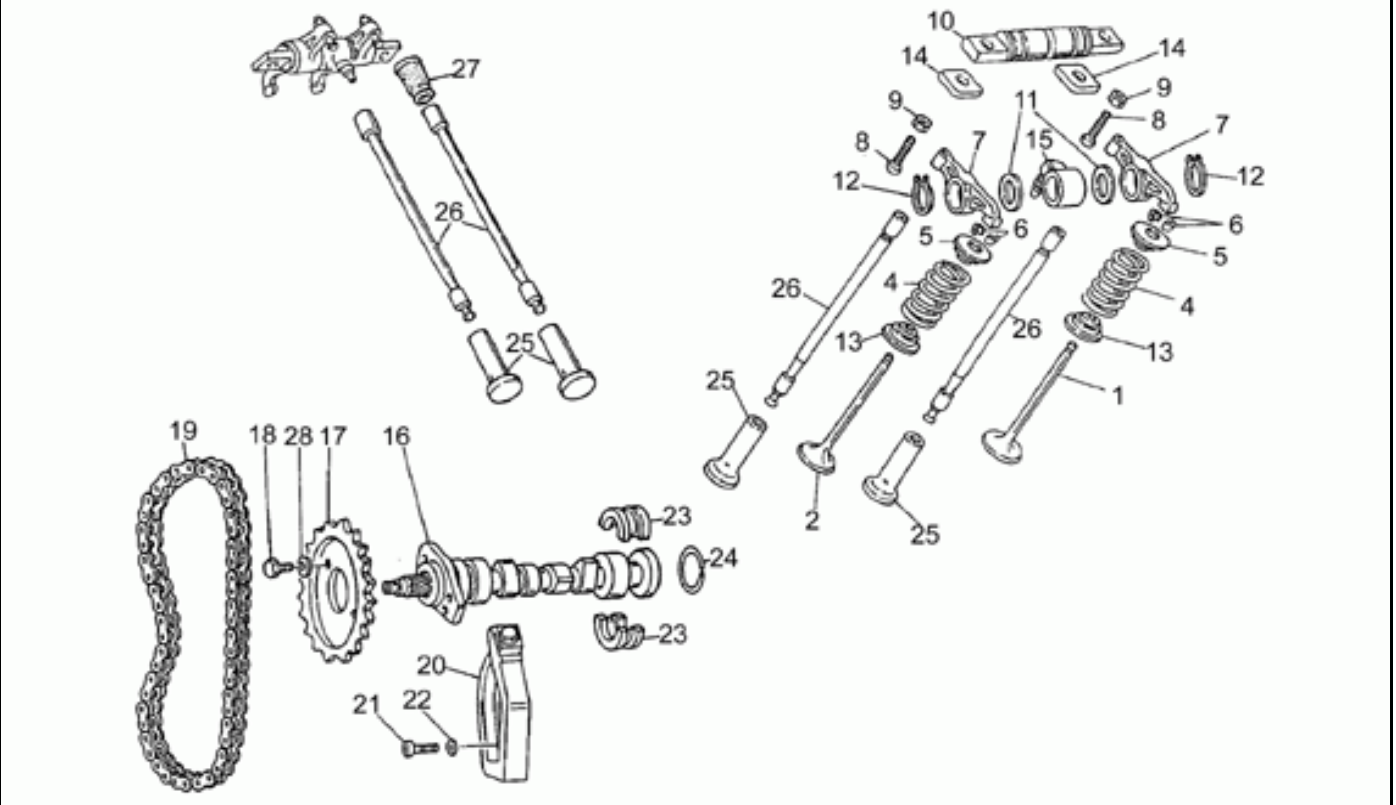

Ref.	Description	Year	I.M.	Country	Version	Code	Qty
1	Soupape d'admission	-	-	-	-	19036082	2
2	Soupape d'échappement	-	-	-	-	19036183	2
4	Ressort	-	-	-	-	27037521	4
5	Coupelle supérieur	-	-	-	-	31038015	4
6	Demi-clavette	-	-	-	-	61038100	8
7	Culbuteur	-	-	-	-	19030500	4
8	Vis	-	-	-	-	19034000	4
9	Ecrou M6x1	-	-	-	-	92602406	4
10	Axe culbuteur	-	-	-	-	19032080	2
11	Rondelle éventail	-	-	-	-	19032380	4
12	Bague seeger	-	-	-	-	90271018	4
13	Coupelle inférieure	-	-	-	-	31037015	4
14	Cale	-	-	-	-	19032980	4
15	Manchon	-	-	-	-	19027500	2
16	Arbre à cames	-	-	-	-	27053463	1
17	Engrenage distribution	-	-	-	-	19054521	1
18	Boulon	-	-	-	-	61054900	2
19	Chaîne de distribution	-	-	-	-	19058021	1
20	Tendeur de chaine	-	-	-	-	19058220	1
21	Vis	-	-	-	-	98822316	1
22	Rondelle	-	-	-	-	95129115	1
23	Secteur	-	-	-	-	19055700	2
24	Anneau élastique	-	-	-	-	90353029	1
25	Poussoir	-	-	-	-	19045861	4
26	Culbuteur tige	-	-	-	-	19045020	4
27	Capuchon	-	-	-	-	27045420	4
28	Rondelle de séreté	-	-	-	-	23217800	2

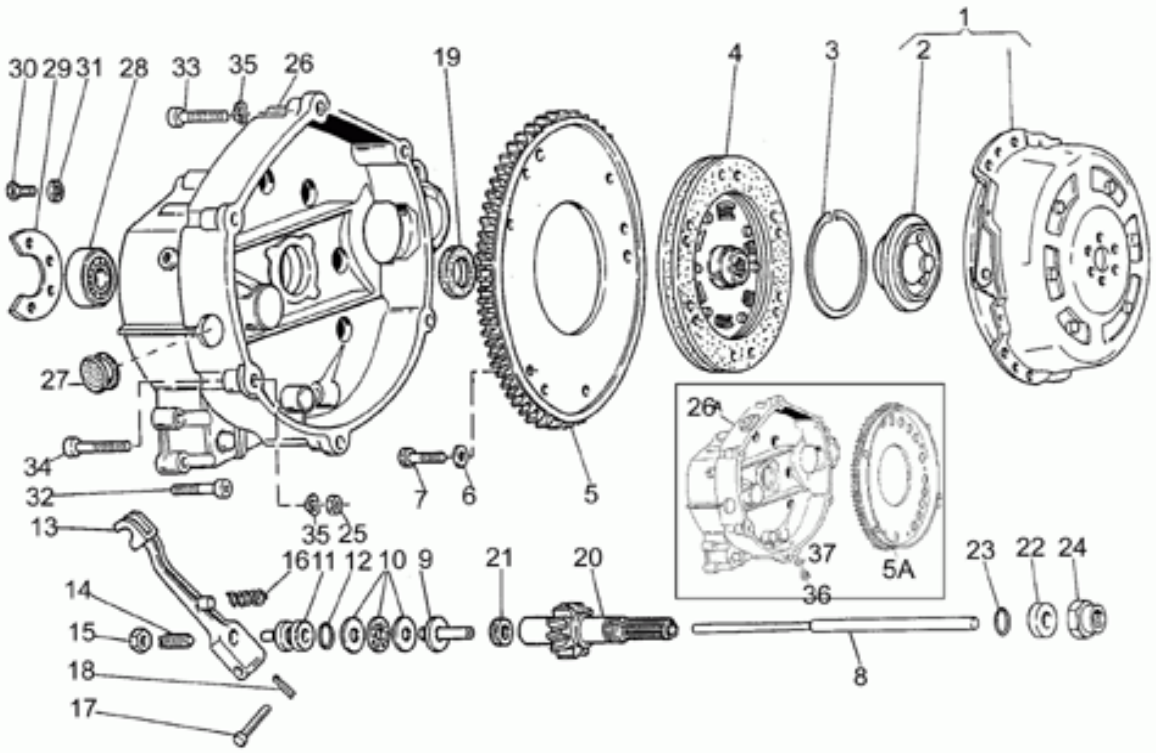

Ref.	Description	Year	I.M.	Country	Version	Code	Qty
1	Commande embrayage	-	-	-	-	19080161	1
2	Cuvette	-	-	-	-	19083462	1
3	Anneau élastique	-	-	-	-	90272075	1
4	Disque embrayage mené	-	-	-	-	27084460	1
5	Couronne MOTOPLAT	-	-	-	-	19067900	1
	Couronne	-	-	-	Aed	31067965	1
6	Rondelle	-	-	-	-	14217901	6
7	Vis M6X16	-	-	-	-	98054316	6
8	Tige	-	-	-	-	20085720	1
9	Corps intérieur	-	-	-	-	14086000	1
10	Palier poussée	-	-	-	-	12087001	1
11	Corps extérieur	-	-	-	-	14086100	1
12	Joint torique	-	-	-	-	90706170	1
13	Débrayage	-	-	-	-	14090201	1
14	Vis embrayage	-	-	-	-	14090400	1
15	Ecrou M8X1	-	-	-	-	92602508	1
16	Retour levier démarrage	-	-	-	-	94321105	1
17	Goupille	-	-	-	-	95780271	1
18	Goupille	-	-	-	-	95500222	1
19	Bague d'étanchéité	-	-	-	-	90403245	1
20	Arbre trnsmission z=14	-	-	-	-	19210716	1
21	Bague d'étanchéité	-	-	-	-	90400616	1
22	Entretoise	-	-	-	-	19213760	1
23	Joint torique	-	-	-	-	90706235	1
24	Ecrou	-	-	-	-	19356760	1
25	Ecrou	-	-	-	-	92602208	1
26	Cloche embrayage DIGIPLEX	-	-	-	-	31200480	1
	Cloche embrayage DIGIPLEX	-	-	-	-	31200464	1
	Cloche embrayage MOTOPLAT	-	-	-	-	19200463	1
27	Bouchon	-	-	-	-	93180220	1
28	Roulement 25x52x15	-	-	-	-	92201225	1
29	Plaque fixation palier	-	-	-	-	19203460	1
30	Vis	-	-	-	-	98054314	3
31	Rondelle	-	-	-	-	14217901	3
32	Vis M6X30	-	-	-	-	98620330	11
33	Vis M8X35	-	-	-	-	98620435	5
34	Vis	-	-	-	-	98620450	1
35	Rondelle élastique	-	-	-	-	61270300	6
36	Bouchon vid.huile	-	-	-	Aed	31003766	1
37	Rondelle 10,2x18x2	-	-	-	Aed	95004210	1

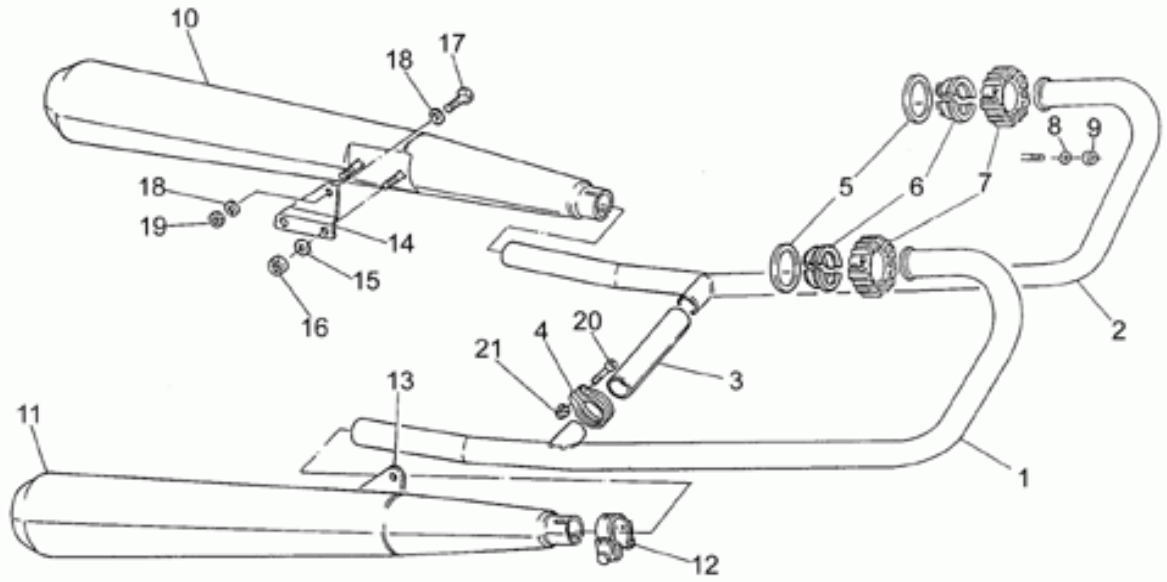

Ref.	Description	Year	I.M.	Country	Version	Code	Qty
1	Tuyau échappement d.	-	-	-	-	19120707	1
2	Tuyau échappement gche	-	-	-	-	19120706	1
3	Tuyau d'échappement	-	-	-	-	19121135	1
4	Collier	-	-	-	-	61126920	2
5	Joint	-	-	-	-	19025280	2
6	Entretoise	-	-	-	-	19025460	4
7	Bague échappement	-	-	-	-	19121050	2
8	Rondelle spéciale	-	-	-	-	61013800	4
9	Ecrou	-	-	-	-	92701062	4
10	Silencieux G	-	-	-	-	19122936	1
11	Silencieux D	-	-	-	-	19123036	1
12	Collier	-	-	-	-	19123435	2
13	Plaque d.	-	-	-	-	19128660	1
14	Plaque g.	-	-	-	-	19128760	1
15	Rondelle élastique	-	-	-	-	61270300	4
16	Ecrou	-	-	-	-	92602208	4
17	Vis M10X35	-	-	-	-	98054535	2
18	Rondelle évent.	-	-	-	-	95021110	2
19	Ecrou	-	-	-	-	92602410	2
20	Vis	-	-	-	-	61127520	2
21	Bague	-	-	-	-	61127220	2

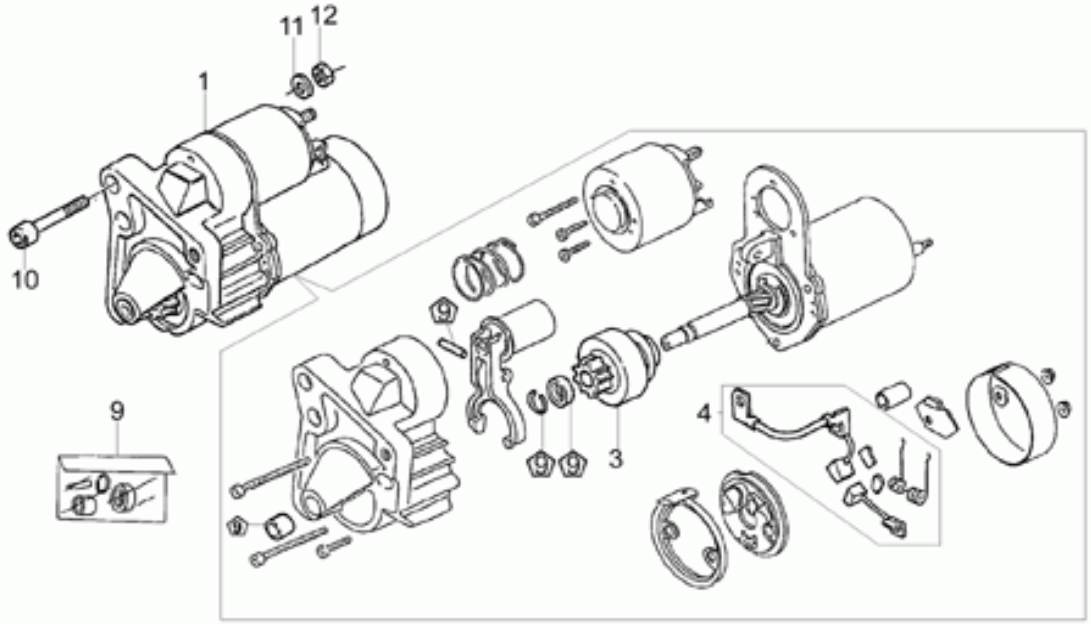

Ref.	Description	Year	I.M.	Country	Version	Code	Qty
1	Démarreur	-	-	-	-	30730711	1
3	Pignon compléte	-	-	-	-	30530510	1
4	Kit de révision brosse	-	-	-	-	30530511	1
9	Kit rév. démarreur	-	-	-	-	30530512	1
10	Vis M8X35	-	-	-	-	98620435	2
11	Rondelle	-	-	-	-	95004208	2
12	Ecrou	-	-	-	-	92602208	2

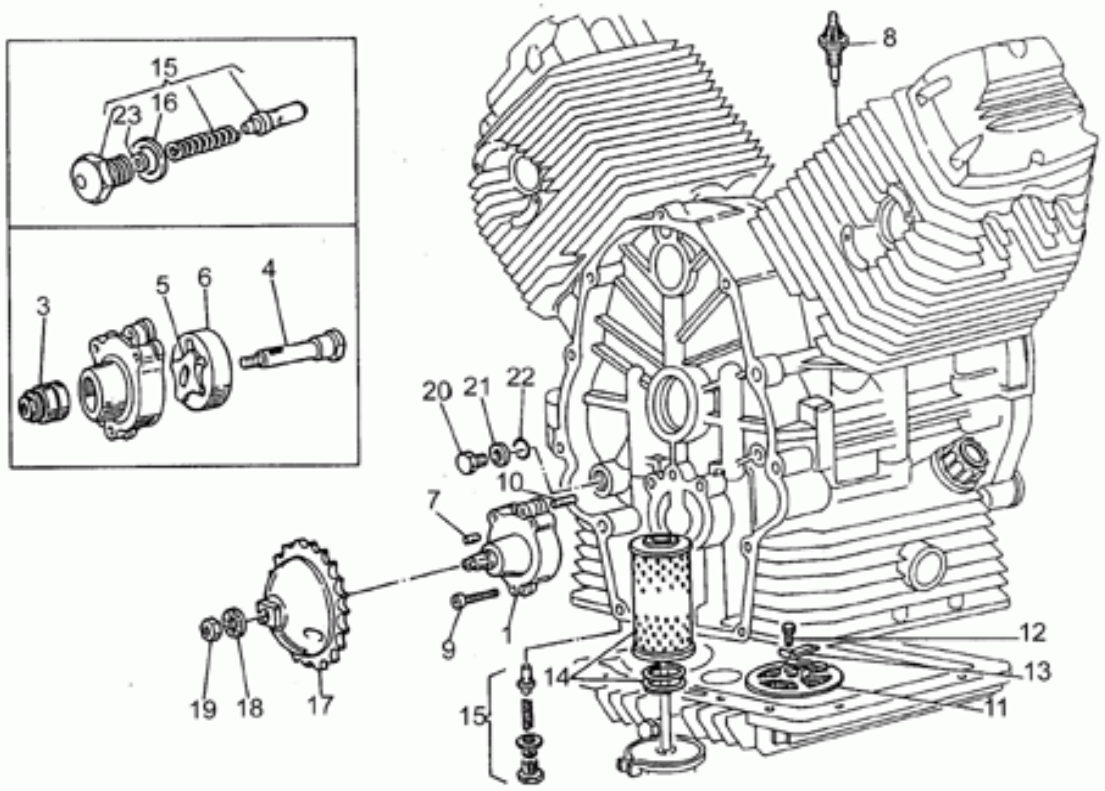

Ref.	Description	Year	I.M.	Country	Version	Code	Qty
1	Pompe huile	-	-	-	FN5	19146422	1
	Pompe huile	-	-	-	TN5	19146420	1
3	Roulement à rouleaux	-	-	-	-	92252210	1
4	Arbre pompe huile	-	-	-	-	20147810	1
	Arbre pompe huile	-	-	-	TN5	19147820	1
5	Rotor intérieur	-	-	-	FN5	20148410	1
	Rotor intérieur	-	-	-	TN5	19148420	1
6	Rotor extérieur	-	-	-	FN5	20148610	1
	Rotor extérieur	-	-	-	TN5	19148620	1
7	Rouleau	-	-	-	FN5	92296723	1
	Rouleau guide	-	-	-	TN5	92296726	1
8	Détecteur pression	-	-	-	-	19768720	1
9	Vis M6X35	-	-	-	-	98620335	3
10	Goupille	-	-	-	-	19018920	2
11	Filtre à huile	-	-	-	-	19152200	1
12	Vis	-	-	-	-	98054314	1
13	Plaquette	-	-	-	-	95187006	1
14	Filtre à huile	-	-	-	FN4	27153085	1
	Filtre à huile	-	-	-	TN4	19153000	1
15	Oil pressure valve	-	-	-	-	31158250	1
16	Rondelle	-	-	-	-	18144350	3
17	Engrenage pompe huile	-	-	-	-	19147721	1
18	Rondelle	-	-	-	-	19149800	1
19	Ecrou	-	-	-	-	92602510	1
20	Bouchon	-	-	-	-	31016050	1
21	Garniture	-	-	-	-	18161150	1
22	Joint torique	-	-	-	-	90706111	1
23	Rondelle 6,15x11x0,8	-	-	-	-	95004206	1

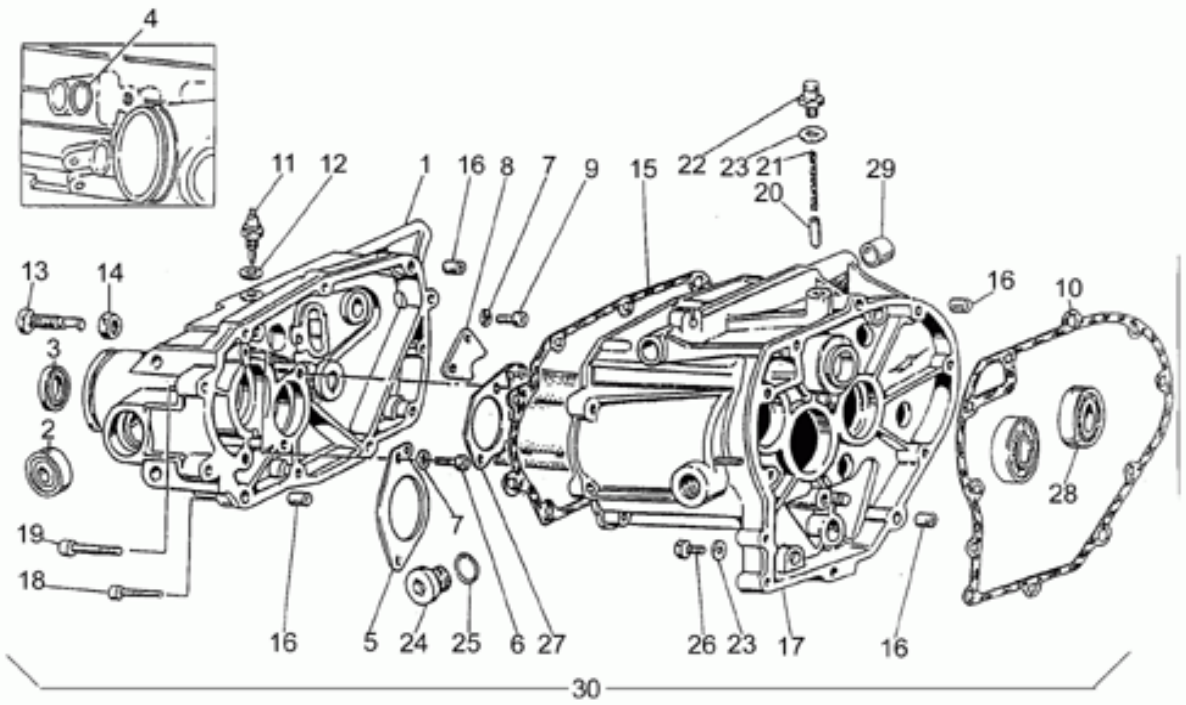

Ref.	Description	Year	I.M.	Country	Version	Code	Qty
1	Couvercle boîte vit. brut	-	-	-	-	19200862	1
	Couvercle boîte vit. gris	-	-	-	-	31200880	1
2	Roulement	-	-	-	-	92204215	2
3	Bague d'étanchéité	-	-	-	-	90402841	1
4	Joint torique	-	-	-	-	90706140	1
5	Plaque	-	-	-	FN2	23213872	1
	Plaque	-	-	-	TN2	23213870	1
6	Vis	-	-	-	-	98622314	4
7	Rondelle	-	-	-	-	14217901	6
8	Huile cloison	-	-	-	FN2	23208272	1
	Plaque	-	-	-	TN2	19235800	1
9	Vis	-	-	-	-	98622314	2
10	Joint	-	-	-	-	23200370	1
11	Capteur	-	-	-	-	19207220	1
12	Joint	-	-	-	-	12154200	1
13	Vis	-	-	-	-	19237800	1
14	Ecrou bas M12x1,25	-	-	-	-	92602512	1
15	Joint	-	-	-	-	19201120	1
16	Bague	-	-	-	-	19002020	4
17	Boîte de vitesses brute	-	-	-	-	19200262	1
	Carter de boîte vitesses	-	-	-	-	31200280	1
18	Vis M6X30	-	-	-	-	98620330	7
19	Vis M8X35	-	-	-	-	98620435	4
20	Encliquetage	-	-	-	-	55234700	1
21	Ressort	-	-	-	-	94321067	1
22	Bouchon purge	-	-	-	-	19206501	1
23	Garniture	-	-	-	-	10528900	2
24	Bouchon huile	-	-	-	-	12022600	1
25	Joint torique 20,24x2,62	-	-	-	-	90706203	1
26	Bouchon vid.huile	-	-	-	-	31003766	1
27	Huile cloison	-	-	-	-	19208220	1
28	Roulement	-	-	-	-	92201120	1
29	Bague	-	-	-	-	19202320	2
30	Boîte vit. cpl.cloche DIGIPLEX	-	-	-	-	19991526	1
	Boîte vit. cpl.cloche MOTOPLAT	-	-	-	-	19991525	1

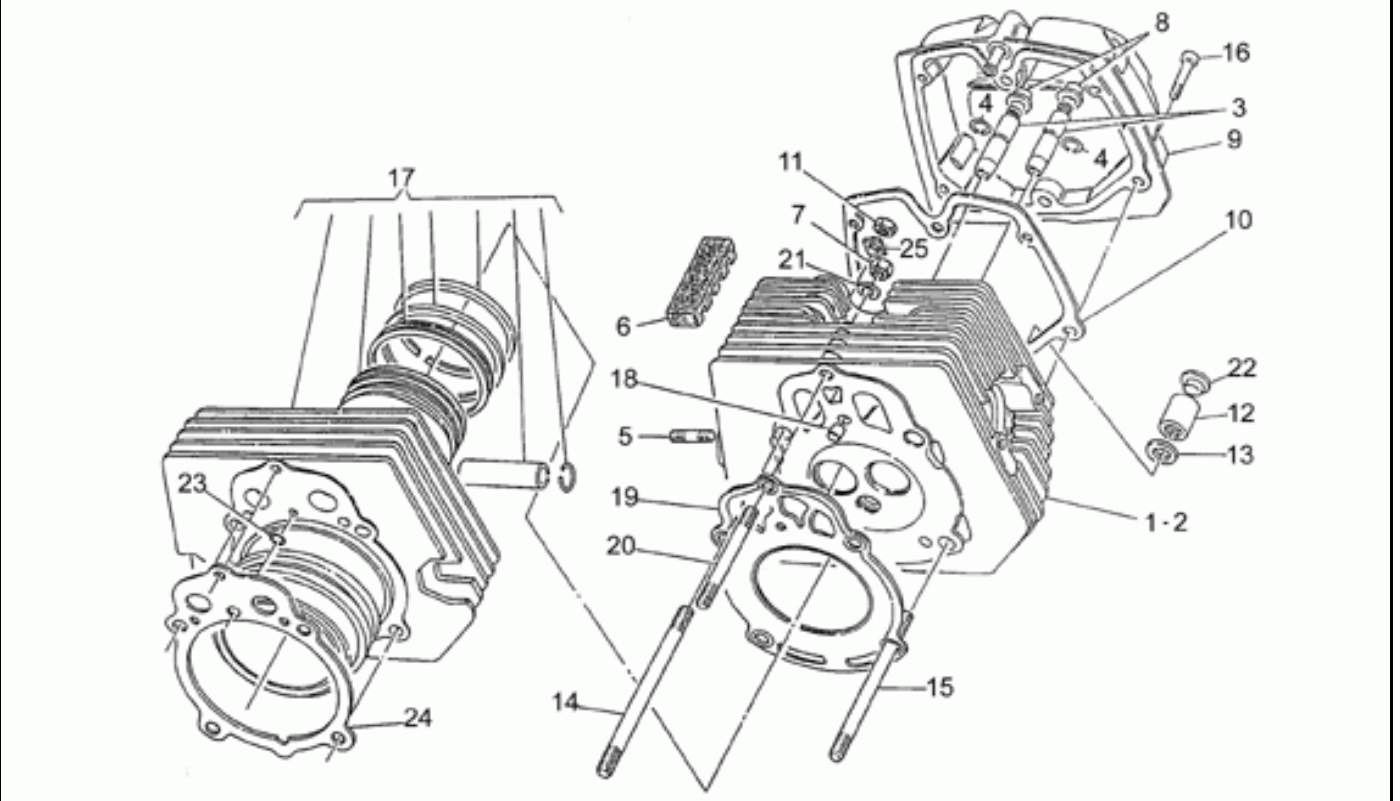

Ref.	Description	Year	I.M.	Country	Version	Code	Qty
1	Culasse d.	-	-	-	-	19022180	1
	Culasse d.gris	-	-	-	-	19022182	1
2	Culasse g.	-	-	-	-	19022280	1
	Culasse g.gris	-	-	-	-	19022282	1
3	Guide soupape	-	-	-	-	61036801	4
4	Anneau élastique	-	-	-	-	90353009	4
5	Vis sans tête	-	-	-	-	96506042	4
6	Plaquette antivibratile	-	-	-	-	19025300	4
7	Ecrou	-	-	-	-	19021920	2
8	Bouchon	-	-	-	-	19037820	4
9	Couvercle soupapes	-	-	-	-	19023520	2
	Couvercle soupapes	-	-	-	-	31023500	2
10	Joint	-	-	-	-	19023700	2
11	Ecrou	-	-	-	-	92603010	4
12	Ecrou colonne	-	-	-	-	13021900	4
13	Rondelle	-	-	-	-	95129180	4
14	Vis sans tête	-	-	-	-	96510182	4
15	Vis sans tête 145mm	-	-	-	FN3	96510145	4
	Vis sans tête 125mm	-	-	-	TN3	96510125	4
16	Vis M6X25	-	-	-	-	98622325	12
17	Cylindre av.piston cpl.	-	-	-	-	19060181	2
	Cylindre cpl.gris	-	-	-	-	19060182	2
18	Bague	-	-	-	-	19021320	2
19	Joint	-	-	-	-	27022080	2
20	Vis sans tête	-	-	-	-	96508107	2
21	Rondelle élastique	-	-	-	-	61270300	2
22	Bouchon	-	-	-	-	93180245	4
23	Joint torique	-	-	-	-	61027200	2
24	Joint	-	-	-	-	27020820	2
25	Cale	-	-	-	-	19032980	4


GUZZI
350

NTX 350 1987-1990	GU056	00	TAB N.	01
BATTERY				

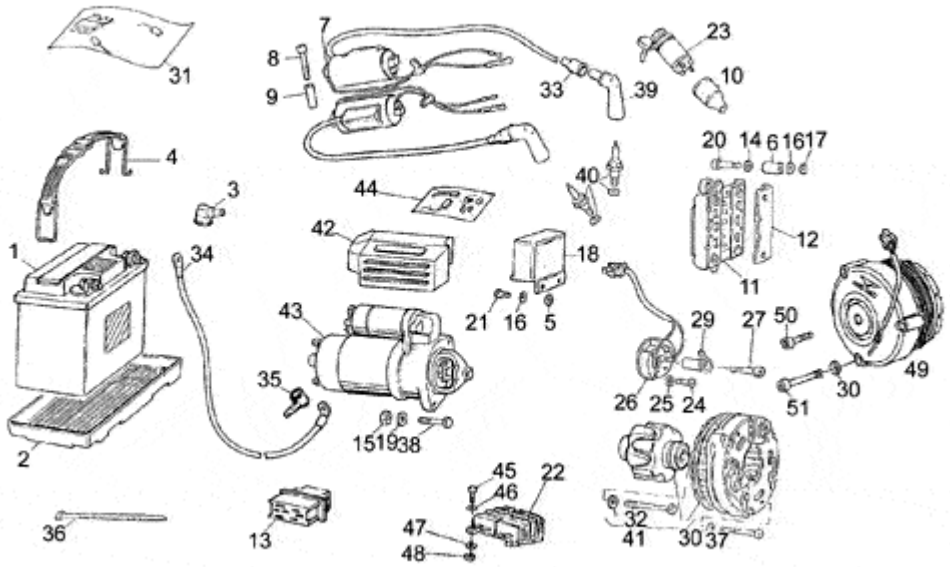

Pos.	Description	Year	I_M_	Country	Version	Code	Q.ty	P.Cod.
1	Battery 12V-24AH	-	-	-	F -	GU20704552	1	
2	Float chamber	-	-	-	- -	GU14707000	1	
3	Cap	-	-	-	- -	GU23707100	1	
4	Plate	-	-	-	- -	GU27704815	1	
5	Spacer	-	-	-	- -	GU91180605	2	
6	Spacer	-	-	-	- -	GU91180721	4	
7	HT coil	-	-	-	N -	GU31716560	2	
8	Screw	-	-	-	- -	GU98620240	4	
9	Spacer	-	-	-	- -	GU91180716	4	
10	Ring nut	-	-	-	- -	GU19741336	1	
11	Bosch rectifier	-	-	-	- -	GU17704300	1	
12	Cover	-	-	-	- -	GU61704200	1	
13	Connector SAPRISA	-	-	-	- -	GU28712500	1	
14	Washer 6,4x12x1,2	-	-	-	- -	GU95100141	2	
15	Nut	-	-	-	- -	GU92601208	1	
16	Spring washer 5,3X10X0,5	-	-	-	- -	GU95129100	6	
17	Nut	-	-	-	- -	GU92602205	4	
18	Voltage regulator BOSCH	-	-	-	- -	GU29703800	1	
19	Washer	-	-	-	- -	GU95007208	2	
20	Screw	-	-	-	- -	GU98052245	4	
21	Screw	-	-	-	- -	GU98054214	2	
22	Voltage regulator SAPRISA	-	-	-	S -	GU28703800	1	
23	Main switch	-	-	-	- -	GU31735360	1	
24	Screw	-	-	-	- -	GU98290512	2	
25	Washer	-	-	-	- -	GU95000205	2	
26	Phase/revolution sensor	-	-	-	- -	GU29722270	1	
27	Screw	-	-	-	- -	GU92622318	1	
29	Rotor	-	-	-	- -	GU27721037	1	
30	Notched washer	-	-	-	- -	GU95021105	3	
31	Repairing kit	-	-	-	- -	GU17712454	1	
32	Screw	-	-	-	B -	GU14712459	1	
33	Cap	-	-	-	- -	GU14717600	2	
34	Wire	-	-	-	- -	GU19748000	2	

35	Cap	-	-	-	-	-	GU19707100	2
36	Hose clamp 3,6x20,6	-	-	-	-	-	GU14609650	20
37	Hex socket screw M5X45	-	-	-	B	-	GU98620245	3
38	Screw	-	-	-	-	-	GU98072435	2
39	Sparkplug cap NGK	-	-	-	-	-	GU30717410	2
40	Spark plug CW8LP	-	-	-	M	-	GU19717001	2
	Spark plug NGK B8ES	-	-	-	-	-	GU31717060	2
41	Bosch alternator	-	-	-	B	-	GU17712400	1
42	Protection	-	-	-	B	-	GU19733350	1
43	Starter motor Valeo	-	-	-	V	-	GU30730711	1
44	Starter motor revision kit	-	-	-	B	-	GU14730570	1
	Starter motor revision kit	-	-	-	L	-	GU19730580	1
45	Hex screw M6X20	-	-	-	-	-	GU98054320	2
46	Notched washer	-	-	-	-	-	GU95021106	2
47	Washer	-	-	-	-	-	GU95000206	2
48	Nut	-	-	-	-	-	GU92602206	2
49	Generator SAPRISA	-	-	-	S	-	GU28712400	1
50	Screw	-	-	-	S	-	GU98620250	3
51	Screw	-	-	-	S	-	GU28712459	1

NTX 350 1987-1990	GU056	00	TAB N.	02
FAIRING				

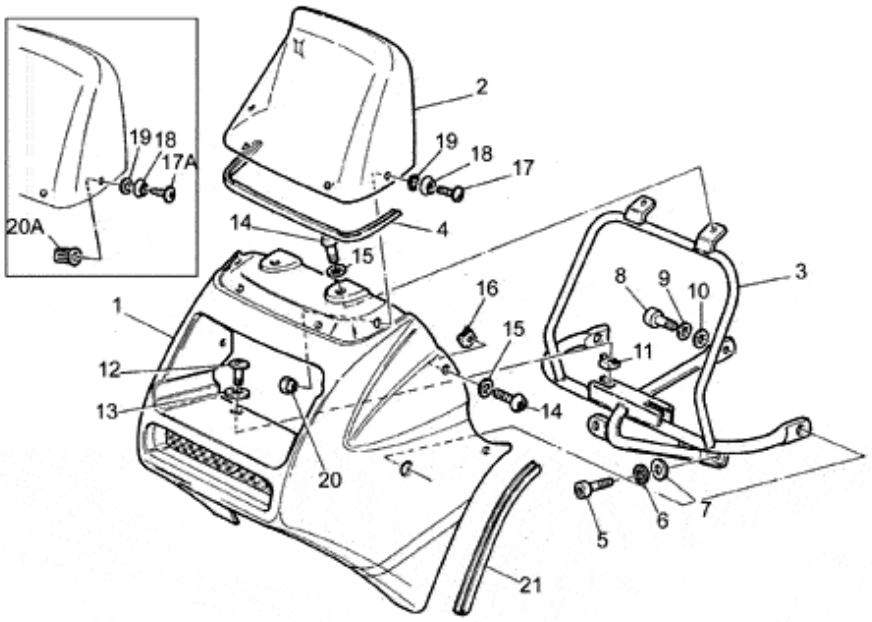

Pos.	Description	Year	I_M_	Country	Version	Code	Q.ty	P.Cod.
1	Windshield	-	-	-	- gr	GU275754151	1	
2	Windscreen	-	-	-	- -	GU27577215	1	
3	Winndshield support	-	-	-	- -	GU27578615007	1	
4	Gasket PVC	-	-	-	- -	GU00823931080	1	
5	Hex socket screw M6X12	-	-	-	- -	GU98682312	2	
6	Notched washer	-	-	-	- -	GU95021106	2	
7	Washer	-	-	-	- -	GU95000206	2	
8	Screw	-	-	-	- -	GU98822420	1	
9	Spring washer	-	-	-	- -	GU95021108	1	
10	Washer	-	-	-	- -	GU95000208	1	
11	Captive nut	-	-	-	- -	GU92660601	2	
12	Screw	-	-	-	- -	GU98326014	2	
13	Washer 6,25X11X1	-	-	-	- -	GU95100119	2	
14	Screw	-	-	-	- -	GU98230618	6	
15	Special washer	-	-	-	- -	GU61013800	6	
16	Clip	-	-	-	- -	GU92680060	4	
17	Screw	-	-	-	- -	GU98260416	4	
	Screw	-	-	-	A -	GU99210316	4	
18	Washer	-	-	-	- -	GU14577850	4	
19	O-ring	-	-	-	- -	GU90706035	4	
20	Nut	-	-	-	- -	GU27576015	4	
	Threaded insert	-	-	-	A -	GU27576016	4	
21	Gasket PVC	-	-	-	- -	GU00823931080	1	

NTX 350 1987-1990	GU056	00	TAB N.	03
BODY				

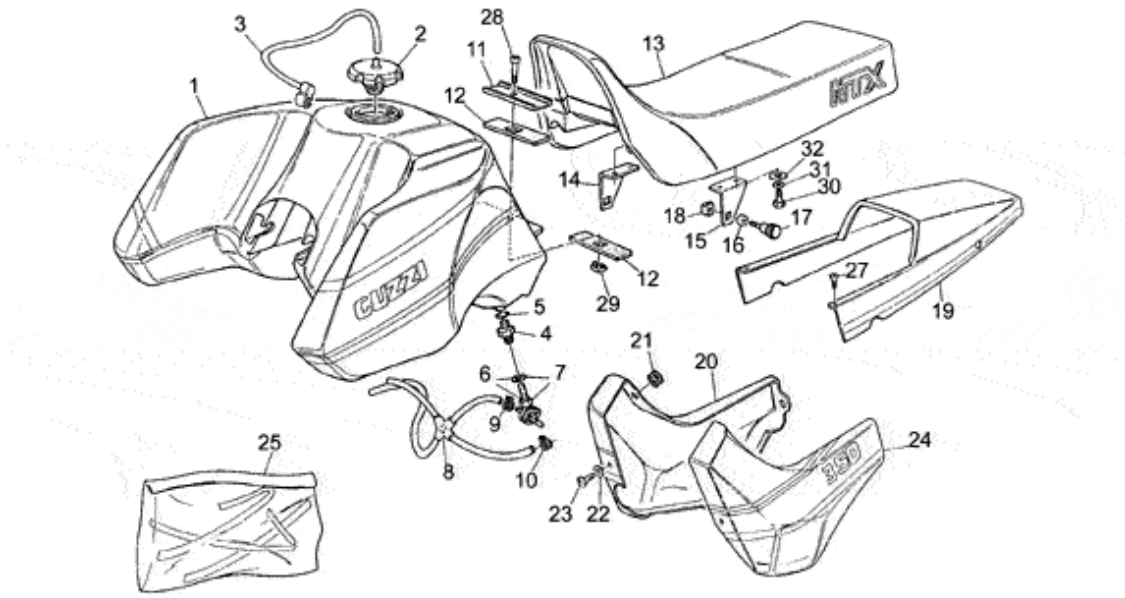

Pos.	Description	Year	I_M_	Country	Version	Code	Q.ty	P.Cod.
1	Fuel tank	-	-	-	- gr	GU271002151	1	
2	Fuel filler cap	-	-	-	- -	GU66103915	1	
3	Breather pipe	-	-	-	- -	GU66109715	1	
4	Union	-	-	-	- -	GU66101815	2	
5	Ring	-	-	-	- -	GU90706204	2	
6	RH fuel cock	-	-	-	- -	GU27105410	1	
7	RH fuel cock	-	-	-	- -	GU27105410	1	
8	Fuel pipe	-	-	-	- -	GU29106500	1	
9	Hose clamp	-	-	-	- -	GU61108400	2	
10	Hose clamp D9	-	-	-	- -	GU61108500	2	
11	Plate	-	-	-	- -	GU27103515	1	
12	Rubber spacer	-	-	-	- -	GU27103415	2	
13	Saddle	-	-	-	- -	GU27460515	1	
14	Clamp	-	-	-	- -	GU27460910	1	
15	Clamp	-	-	-	- -	GU27460911	1	
16	Spacer	-	-	-	- -	GU91180605	2	
17	Knob	-	-	-	- -	GU27462910	2	
18	Captive nut	-	-	-	- -	GU92660601	21	
19	Rear fairing	-	-	-	- gr	GU274664101	1	
	Rear fairing	-	-	-	- b-r	GU27466416	1	
	Rear fairing	-	-	-	- b-gg-r	GU27466417	1	
	Rear fairing	-	-	-	- b-g-n	GU27466418	1	
20	RH side panel	-	-	-	- gr	GU274762151	1	
21	Rubber spacer	-	-	-	- -	GU91551085	4	
22	Nylon washer 6X17X1	-	-	-	- -	GU66478610	2	
23	Screw	-	-	-	- -	GU98326016	2	
24	LH side panel	-	-	-	- gr	GU274763151	1	
25	Decal set	-	-	-	- b	GU27923315	1	
27	Screw	-	-	-	- -	GU98250516	2	
28	Screw M8X30	-	-	-	- -	GU98622430	1	
29	Captive nut	-	-	-	- -	GU92660801	1	
30	Hex screw M6X16	-	-	-	- -	GU98054316	4	
31	Notched washer	-	-	-	- -	GU95021106	4	
32	Washer	-	-	-	- -	GU95101140	4	

NTX 350 1987-1990	GU056	00	TAB N.	04
BEVEL GEAR				

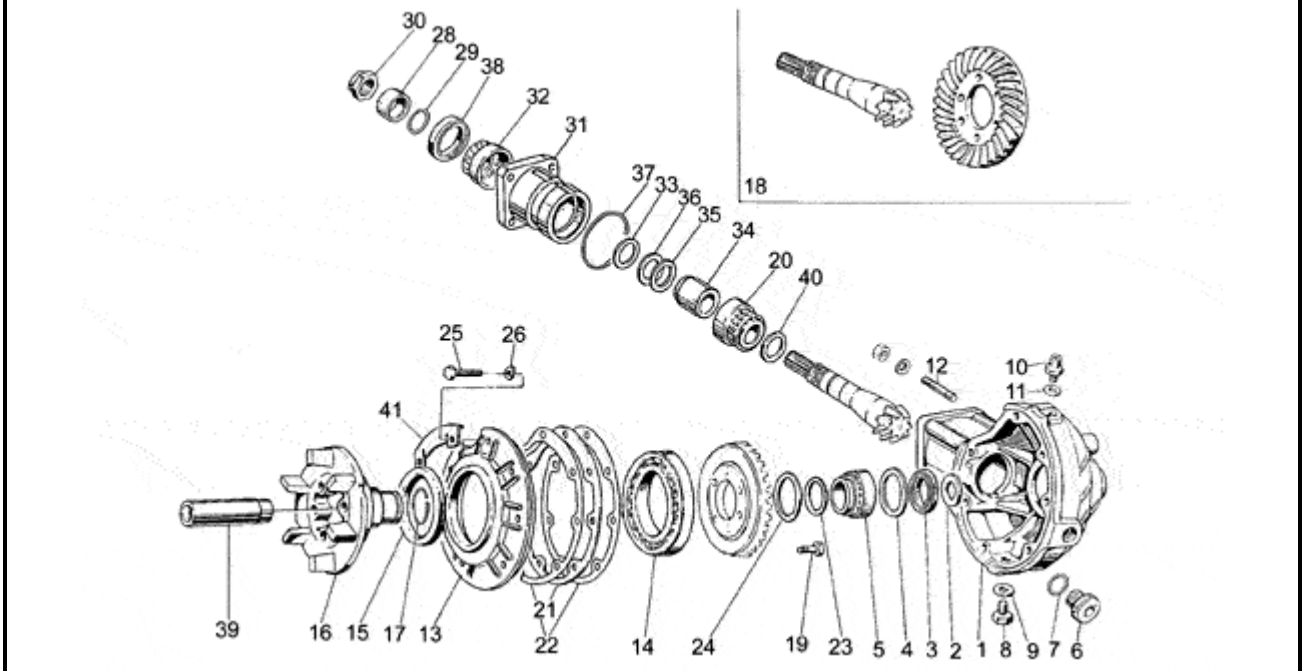

Pos.	Description	Year	I_M_	Country	Version	Code	Q.ty	P.Cod.
1	Transmission cover	-	-	-	- -	GU31350331	1	
2	Clearance washer	-	-	-	- -	GU19351900	1	
3	Gasket ring	-	-	-	- -	GU70403547	11	
4	Clearance washer	-	-	-	- -	GU19351100	1	
5	Roller bearing 35x50x17	-	-	-	- -	GU92252235	1	
6	Oil filler plug	-	-	-	- -	GU31351200	1	
7	O-ring 20,24X2,62	-	-	-	- -	GU90706203	1	
8	Plug	-	-	-	- -	GU95980611	1	
9	Gasket	-	-	-	- -	GU10528900	1	
10	Breather plug	-	-	-	- -	GU31206500	1	
11	Gasket	-	-	-	- -	GU10528900	1	
12	Stud bolt	-	-	-	- -	GU96508055	1	
13	Cover	-	-	-	- -	GU27350410	1	
14	Ball bearing 70x110x13	-	-	-	- -	GU92201070	1	
15	Gasket ring 75x90x8	-	-	-	- -	GU90407590	1	
16	Pin	-	-	-	- -	GU19351402	1	
17	Stop ring	-	-	-	- -	GU90353030	1	
18	Bevel gear Z=8/31	-	-	-	- -	GU20354621	1	
19	Screw	-	-	-	- -	GU19356320	6	
20	Tap.roller bearing	-	-	-	- -	GU92249223	1	
21	Spacer 1,1 mm	-	-	-	- -	GU19355406	1	
	Spacer 1,6 mm	-	-	-	- -	GU19355413	1	
	Spacer 1,5 mm	-	-	-	- -	GU19355412	1	
	Spacer 1,4 mm	-	-	-	- -	GU19355411	1	
	Spacer 1,2 mm	-	-	-	- -	GU19355408	1	
	Spacer 1 mm	-	-	-	- -	GU19355404	1	
	Spacer 0,9 mm	-	-	-	- -	GU19355402	1	
	Spacer 0,8 mm	-	-	-	- -	GU19355400	1	
	Spacer 1,3 mm	-	-	-	- -	GU19355410	1	
22	Gasket	-	-	-	- -	GU19350700	2	
23	Thrust washer	-	-	-	- -	GU19352300	1	
24	Thrust washer	-	-	-	- -	GU19353500	1	
25	Screw M8X25	-	-	-	- -	GU19357660	7	

Revente Interdite - Revendita Vietata - Resaling Forbiden - Wiederverkauf Verboten

26	Spring washer 8x15x0,3	-	-	-	-	-	GU61270300	7
28	Spacer	-	-	-	-	-	GU19356801	1
29	Gasket ring 18,77X1,78	-	-	-	-	-	GU90706188	1
30	Nut	-	-	-	-	-	GU19356700	1
31	Bearing casing	-	-	-	-	-	GU19352401	1
32	Roller bearing 20x47x14	-	-	-	-	-	GU92249220	1
33	Spacer 1,1 mm	-	-	-	-	-	GU19355301	2
	Spacer 1,8 mm	-	-	-	-	-	GU19355308	2
	Spacer 1,7 mm	-	-	-	-	-	GU19355307	2
	Spacer 1,6 mm	-	-	-	-	-	GU19355306	2
	Spacer 1,5 mm	-	-	-	-	-	GU19355305	2
	Spacer 1,4 mm	-	-	-	-	-	GU19355304	2
	Spacer 1,2 mm	-	-	-	-	-	GU19355302	2
	Spacer 1,9 mm	-	-	-	-	-	GU19355309	2
	Spacer 1 mm	-	-	-	-	-	GU19355300	2
	Spacer 1,3 mm	-	-	-	-	-	GU19355303	2
34	Spacer	-	-	-	-	-	GU19355121	1
35	Shim 0,1 mm	-	-	-	-	-	GU19355200	1
36	Shim 0,15 mm	-	-	-	-	-	GU19355202	1
37	Gasket ring	-	-	-	-	-	GU90706552	1
38	Gasket ring	-	-	-	-	-	GU90403247	1
39	Spacer	-	-	-	-	-	GU27634110	2
40	Spacer 1,1 mm	-	-	-	-	-	GU19355321	1
	Spacer 1,9 mm	-	-	-	-	-	GU19355329	1
	Spacer 1,8 mm	-	-	-	-	-	GU19355328	1
	Spacer 1,7 mm	-	-	-	-	-	GU19355327	1
	Spacer 1,6 mm	-	-	-	-	-	GU19355326	1
	Spacer 1,5 mm	-	-	-	-	-	GU19355325	1
	Spacer 1,4 mm	-	-	-	-	-	GU19355324	1
	Spacer 1,2 mm	-	-	-	-	-	GU19355322	1
	Spacer 1 mm	-	-	-	-	-	GU19355320	1
	Spacer 1,3 mm	-	-	-	-	-	GU19355323	1
41	Plate	-	-	-	-	-	GU27357411	1

Revente Interdite - Revendita Vietata - Resaling Forbiden - Wiederverkauf Verboten

NTX 350 1987-1990	GU056	00	TAB N.	05
DASHBOARD				

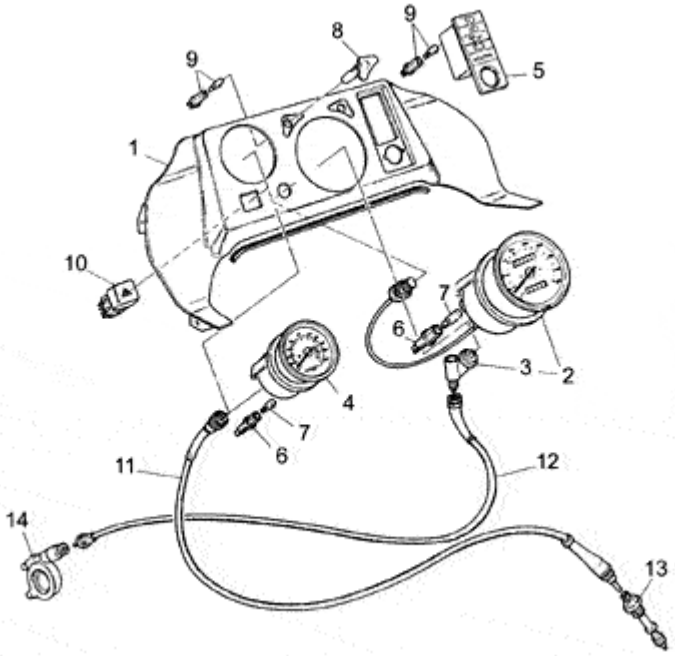

Pos.	Description	Year	I_M_	Country	Version	Code	Q.ty	P.Cod.
1	Dashboard lower support	-	-	-	- -	GU31501635	1	
2	Speedometer	-	-	-	- -	GU27761515	1	
3	Gear 60°	-	-	-	- -	GU23768310	1	
4	Tachometer	-	-	-	- -	GU27767215	1	
5	Panel with lenses	-	-	-	- -	GU63766920	1	
6	Lampholder	-	-	-	- -	GU14768650	2	
7	Lamp 12v-3w	-	-	-	- -	GU93450120	2	
8	Blinker indicator light holder	-	-	-	- -	GU65758970	2	
9	Lampholder	-	-	-	- -	GU19768680	7	
10	Turn indicator switch	-	-	-	- -	GU28745760	1	
11	Rev counter transmission	-	-	-	- -	GU27768185	1	
12	Speedometer transmission	-	-	-	- -	GU27760410	1	
13	Gear Z=14	-	-	-	- -	GU14769200	1	
14	Speedometer gear	-	-	-	- -	GU27762510	1	

Revente Interdite - Revendita Vietata - Resaling Forbiden - Wiederverkauf Verboten

NTX 350 1987-1990	GU056	00	TAB N.	06
HEADLIGHT-HORN				

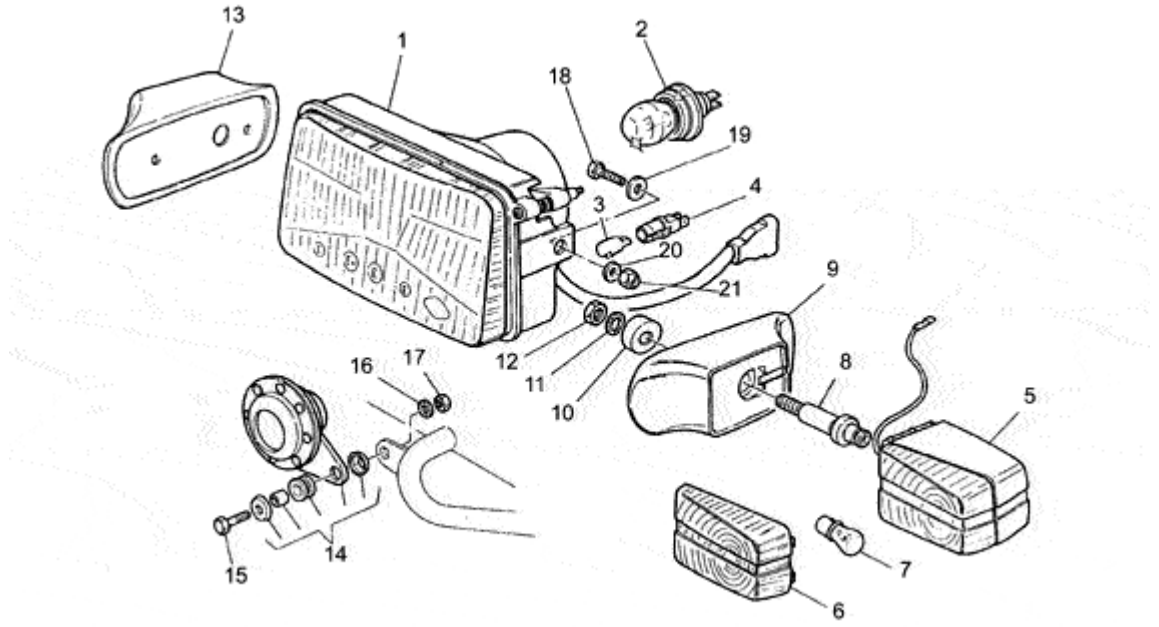

Pos.	Description	Year	I_M_	Country	Version	Code	Q.ty	P.Cod.
1	Headlight	-	-	-	- -	GU27740515	1	
2	Lamp 12V 45/40W	-	-	-	- -	GU93450231	1	
3	Lamp 12V-5W	-	-	-	- -	GU93450105	1	
4	Lampholder	-	-	-	- -	GU14768650	1	
5	Rear turn indicator	-	-	-	- -	GU27751611	2	
6	Turn indicator lens	-	-	-	- -	GU28753750	2	
7	Lamp 12V-10W	-	-	-	- -	GU93450129	2	
8	Turn sig. support rod	-	-	-	- -	GU27751315	2	
9	Front LH turn indic.supp.cpl.	-	-	-	- -	GU27753216	1	
10	Spacer	-	-	-	- -	GU27753415	2	
11	Notched washer	-	-	-	- -	GU95022110	2	
12	Nut	-	-	-	- -	GU92602411	2	
13	Front RH turn indic.supp.cpl.	-	-	-	- -	GU27753215	1	
14	Horn	-	-	-	- -	GU27743715	1	
15	Hex screw M6X22	-	-	-	- -	GU98054322	1	
16	Notched washer	-	-	-	- -	GU95021106	1	
17	Nut	-	-	-	- -	GU92602206	1	
18	Hex screw M6X22	-	-	-	- -	GU98054322	2	
19	Washer 6,4x12x1,2	-	-	-	- -	GU95100141	2	
20	Washer 5,3x10x0,5	-	-	-	- -	GU95100121	2	
21	Nut M6x1	-	-	-	- -	GU92630106	2	

NTX 350 1987-1990	GU056	00	TAB N.	07
TAILLIGHT				

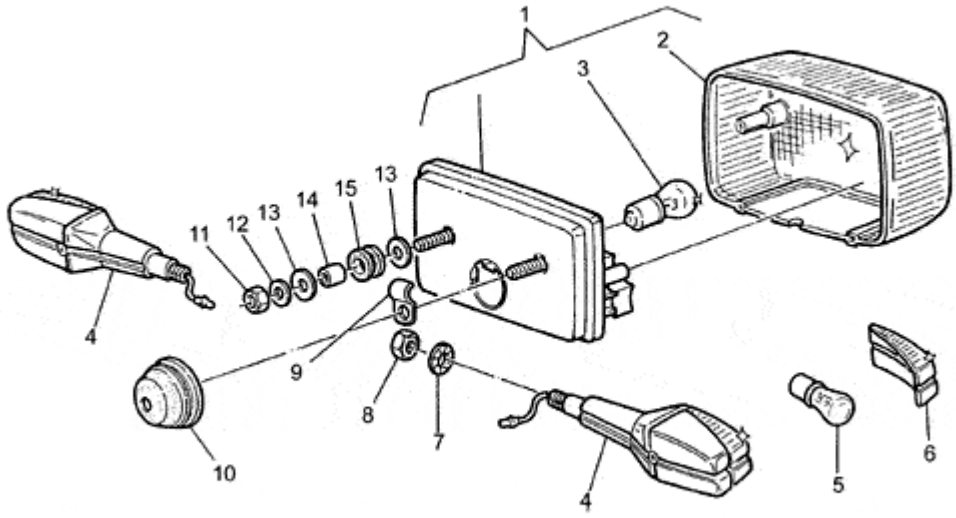

Pos.	Description	Year	I_M_	Country	Version	Code	Q.ty	P.Cod.
1	Stud bolt	-	-	-	- -	GU27742010	1	
2	Taillight	-	-	-	- -	GU27740911	1	
3	Lamp 12V/5-21W	-	-	-	- -	GU93450224	1	
4	Rear turn indicator	-	-	-	- -	GU27751611	2	
5	Lamp 12V-10W	-	-	-	- -	GU93450129	2	
6	Turn indicator lens	-	-	-	- -	GU28753750	2	
7	Notched washer	-	-	-	- -	GU95022110	2	
8	Nut	-	-	-	- -	GU92602411	2	
9	U-bolt	-	-	-	- -	GU93301175	1	
10	Rubber spacer	-	-	-	- -	GU27741310	1	
11	Nut	-	-	-	- -	GU92602206	2	
12	Notched washer	-	-	-	- -	GU95021106	2	
13	Washer 6,2X18X1	-	-	-	- -	GU95100118	4	
14	Spacer	-	-	-	- -	GU91180607	2	
15	Rubber spacer	-	-	-	- -	GU91551062	2	

NTX 350 1987-1990	GU056	00	TAB N.	08
AIR FILTER				

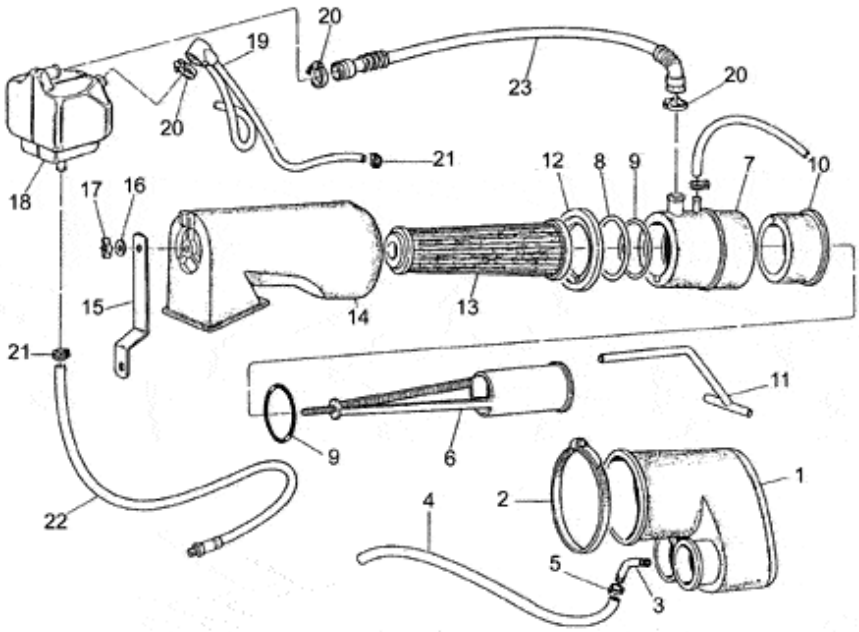

Pos.	Description	Year	I_M_	Country	Version	Code	Q.ty	P.Cod.
1	Intake manifold	-	-	-	-	GU19114300	1	
2	Hose clamp	-	-	-	-	GU93305092	1	
3	Pipe	-	-	-	-	GU17114650	1	
4	Rubber pipe 5X9	-	-	-	-	GU00823944050	1	
5	Hose clamp 3,6x20,6	-	-	-	-	GU14609650	1	
6	Air filter support	-	-	-	-	GU19155775	1	
7	Front hose	-	-	-	-	GU19156701	1	
8	Gasket	-	-	-	-	GU19113900	1	
9	Gasket ring	-	-	-	-	GU90706552	2	
10	Rear hose	-	-	-	-	GU19156900	1	
11	Breather pipe	-	-	-	-	GU19156001	1	
12	Ring	-	-	-	-	GU17113450	1	
13	Air filter	-	-	-	-	GU17113651	1	
14	Filter cover	-	-	-	-	GU17114050	1	
15	Support plate	-	-	-	-	GU27114120	1	
16	Washer 5,25x14x1,5	-	-	-	-	GU95100059	1	
17	Nut	-	-	-	-	GU92670305	1	
18	Housing	-	-	-	-	GU31153481	1	
19	Breather	-	-	-	-	GU27159661	1	
20	Hose clamp	-	-	-	-	GU93305018	3	
21	Hose clamp	-	-	-	-	GU61108400	3	
22	Breather	-	-	-	-	GU27159360	1	
23	Pipe	-	-	-	-	GU27157420	1	

NTX 350 1987-1990	GU056	00	TAB N.	09
FRONT FORK				

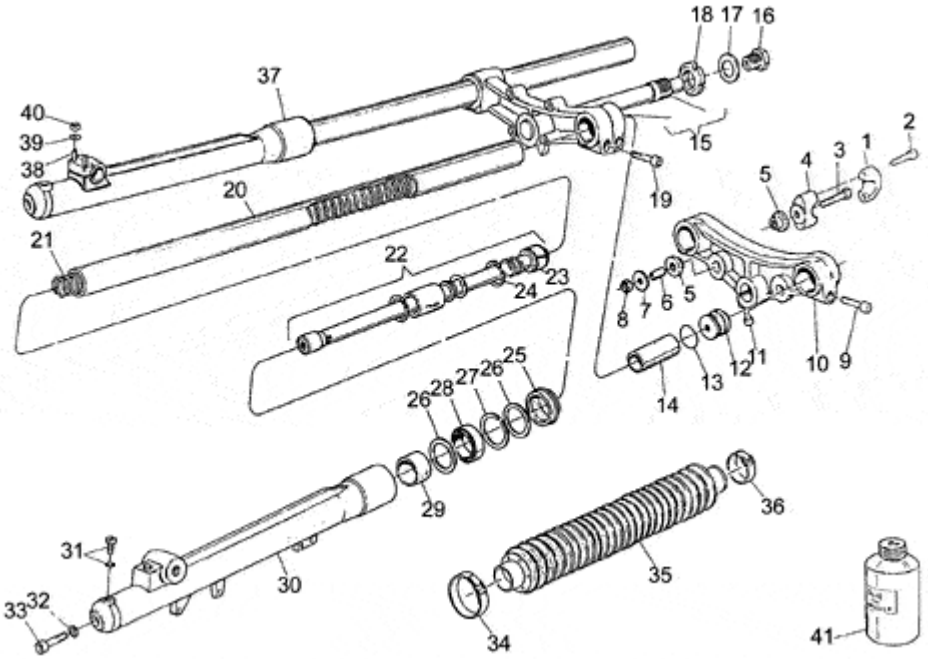

Pos.	Description	Year	I_M_	Country	Version	Code	Q.ty	P.Cod.
1	Upper U-bolt, black	-	-	-	- -	GU27530501	2	
2	Screw M8X30	-	-	-	- -	GU98622430	4	
3	Screw	-	-	-	- -	GU66530501	2	
4	Lower U-bolt	-	-	-	- g	GU27530502	2	
5	Rubber spacer	-	-	-	- -	GU27530503	4	
6	Pipe	-	-	-	- -	GU27530504	2	
7	Cup	-	-	-	- -	GU27530505	2	
8	Nut	-	-	-	- -	GU27530506	2	
9	Screw	-	-	-	- -	GU66530504	2	
10	Upper plate	-	-	-	- r	GU27793115	1	
	Fork head black	-	-	-	- g	GU27493170	1	
11	Hex socket screw M8x30	-	-	-	- -	GU98682430	4	
12	Plug	-	-	-	- -	GU27530575	2	
13	O-ring	-	-	-	- -	GU27530576	2	
14	Pipe	-	-	-	- -	GU27530577	2	
15	Bottom plate, black	-	-	-	- -	GU27494070	1	
16	Nut	-	-	-	- -	GU27530509	1	
17	Washer	-	-	-	- -	GU27530510	1	
18	Ring nut	-	-	-	- -	GU27530511	1	
19	Screw M6X35	-	-	-	- -	GU98620335	4	
20	Sleeve	-	-	-	- -	GU27525415	2	
21	Spring	-	-	-	- -	GU31526636	2	
22	Plunger, complete	-	-	-	- -	GU27530578	2	
23	Gasket ring	-	-	-	- -	GU27530579	2	
24	Stop ring	-	-	-	- -	GU27530580	2	
25	Dust cover	-	-	-	- -	GU29524550	2	
26	Washer	-	-	-	- -	GU27530582	4	
27	Snap ring	-	-	-	- -	GU27530583	2	
28	Gasket ring 40x52x9,5	-	-	-	- -	GU27530584	2	
29	Bush	-	-	-	- -	GU27530585	2	
30	LH sleeve	-	-	-	- r	GU27522615	1	
	LH sleeve	-	-	-	- g	GU27522616	1	
31	Screw	-	-	-	- -	GU27530523	2	

32	Washer	-	-	-	-	-	GU27530591	2
33	Screw	-	-	-	-	-	GU27530592	2
34	Hose clamp	-	-	-	-	-	GU27530586	2
35	Anti-dust tube	-	-	-	-	-	GU27530530	2
36	Hose clamp	-	-	-	-	-	GU27530587	2
37	RH sleeve	-	-	-	-	r	GU27522515	1
	RH sleeve	-	-	-	-	g	GU27522516	1
38	Stud bolt	-	-	-	-	-	GU27530522	2
39	Washer	-	-	-	-	-	GU27530521	2
40	Self-locking nut	-	-	-	-	-	GU27530520	2
41	Engine oil SAE 20	-	-	-	-	-	GU27530531	10

Revente Interdite - Revendita Vietata - Resaling Forbiden - Wiederverkauf Verboten

NTX 350 1987-1990	GU056	00	TAB N.	10
SWING ARM				

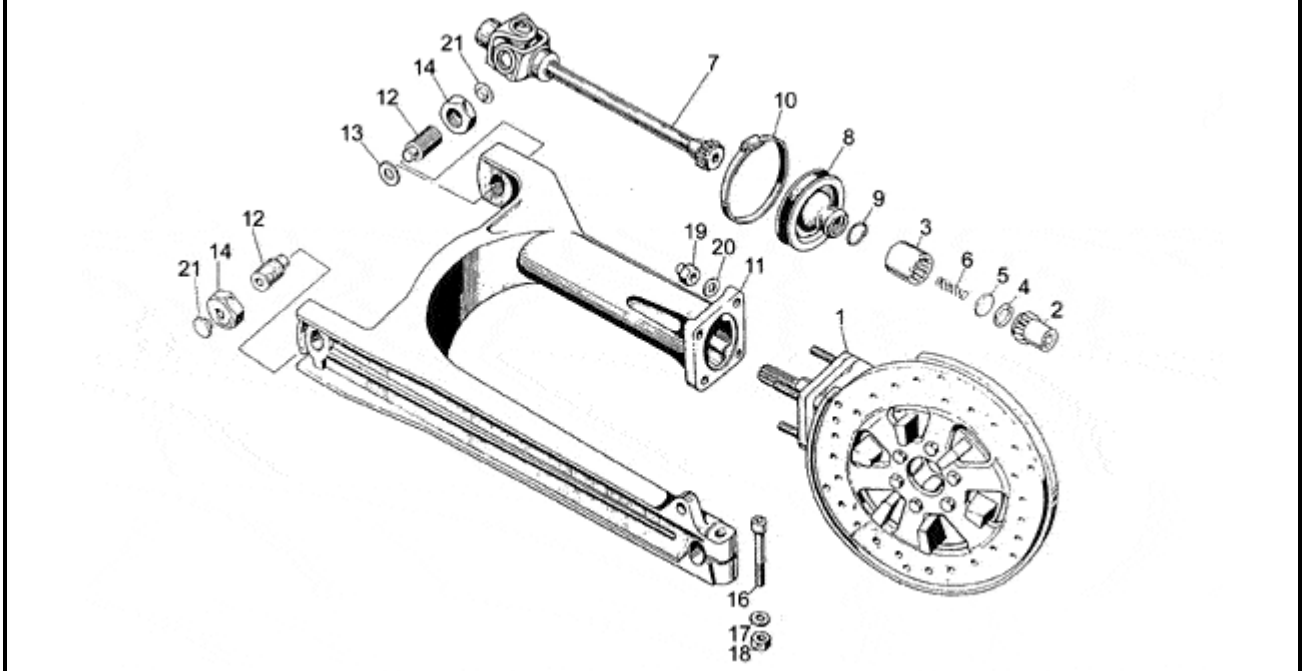

Pos.	Description	Year	I_M_	Country	Version	Code	Q.ty	P.Cod.
1	Transmission complete	-	-	-	- -	GU31350231	1	
2	Hose	-	-	-	- -	GU19327701	1	
3	Hose	-	-	-	- -	GU19328801	1	
4	Circlip	-	-	-	- -	GU90272023	1	
5	Disc	-	-	-	- -	GU19327601	1	
6	Spring	-	-	-	- -	GU94321099	1	
7	Coupling	-	-	-	- -	GU23328081	1	
8	Protection collar	-	-	-	- -	GU23548080	1	
9	Spring	-	-	-	- -	GU23548180	1	
10	Hose clamp	-	-	-	- -	GU93305074	1	
11	Swing arm	-	-	-	- -	GU23540210	1	
12	Pin	-	-	-	- -	GU19547000	2	
13	Spacer	-	-	-	- -	GU35214300	2	
14	Nut	-	-	-	- -	GU14547800	1	
16	Screw	-	-	-	- -	GU98620545	1	
17	Washer 10,2x18x2	-	-	-	- -	GU95004210	1	
18	Nut	-	-	-	- -	GU92602210	1	
19	Cap nut	-	-	-	- -	GU92781082	4	
20	Washer 8,4X13X0,8	-	-	-	- -	GU14615901	4	
21	Plug	-	-	-	- -	GU93180105	2	

Revente Interdite - Revendita Vietata - Resaling Forbiden - Wiederverkauf Verboten

NTX 350 1987-1990	GU056	00	TAB N.	11
ELECTRICAL SYSTEM				

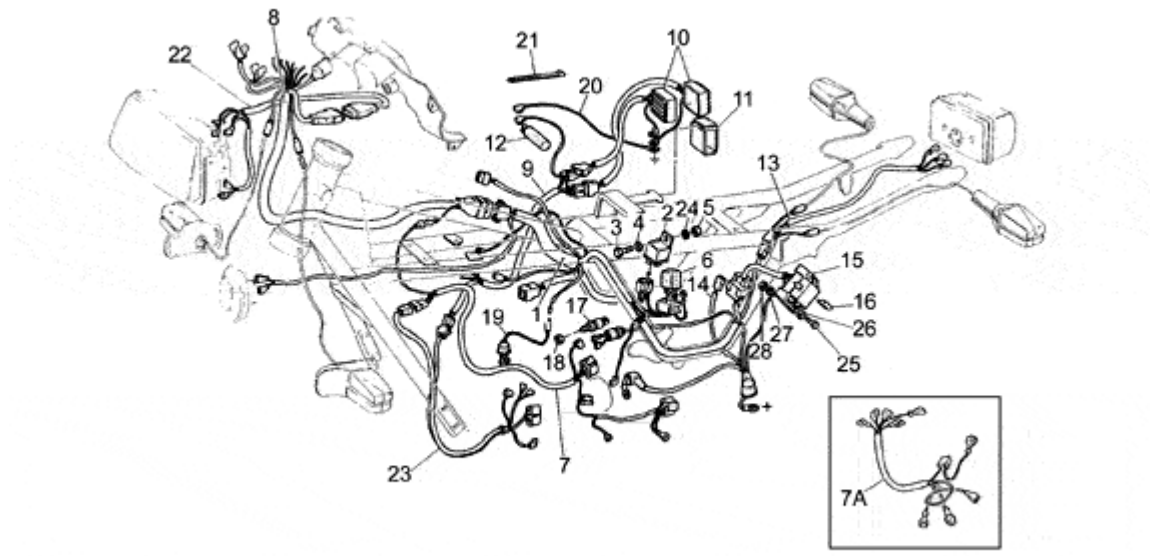

Pos.	Description	Year	I_M_	Country	Version	Code	Q.ty	P.Cod.
	Alternator-regulator wiring	-	-	-	S -	GU27725820	1	
1	Electrical system	-	-	-	- -	GU27747115	1	
2	Starter relay	-	-	-	- -	GU19732500	1	
3	Screw	-	-	-	- -	GU98054212	2	
4	Washer	-	-	-	- -	GU95000205	2	
5	Nut	-	-	-	- -	GU92602205	2	
6	Flasher unit	-	-	-	- -	GU28750561	1	
7	Alternator-regulator wiring	-	-	-	B -	GU27725810	1	
8	Dashboard cable	-	-	-	- -	GU27747215	1	
9	Ignition harness	-	-	-	- -	GU27722115	1	
10	Electronic control unit	-	-	-	- -	GU23721494	2	
11	Flexible support	-	-	-	- -	GU27723835	2	
12	Capacitor	-	-	-	- -	GU27710435	1	
13	Taillight wiring harn.	-	-	-	- -	GU62747320	1	
14	Wire	-	-	-	- -	GU27747815	1	
15	Fuse holder box	-	-	-	- -	GU30743000	1	
16	Fuse 15A	-	-	-	- -	GU28742560	6	
17	Brake light switch	-	-	-	- -	GU39741150	1	
18	Nut	-	-	-	- -	GU92700071	2	
19	Neutral indicator extension	-	-	-	- -	GU19724560	1	
20	Wire	-	-	-	- -	GU18759550	1	
21	Hose clamp 3,6x20,6	-	-	-	- -	GU14609650	1	
	Hose clamp	-	-	-	- -	GU61609630	1	
22	Headlight wiring w/harness	-	-	-	- -	GU14747455	1	
23	Alternator wiring BOSCH	-	-	-	B -	GU23726300	1	
24	Notched washer	-	-	-	- -	GU95021105	2	
25	Screw	-	-	-	- -	GU98054216	2	
26	Washer 5,25x14x1,5	-	-	-	- -	GU95100059	2	
27	Washer	-	-	-	- -	GU95000205	2	
28	Nut	-	-	-	- -	GU92630205	2	

NTX 350 1987-1990	GU056	00	TAB N.	12

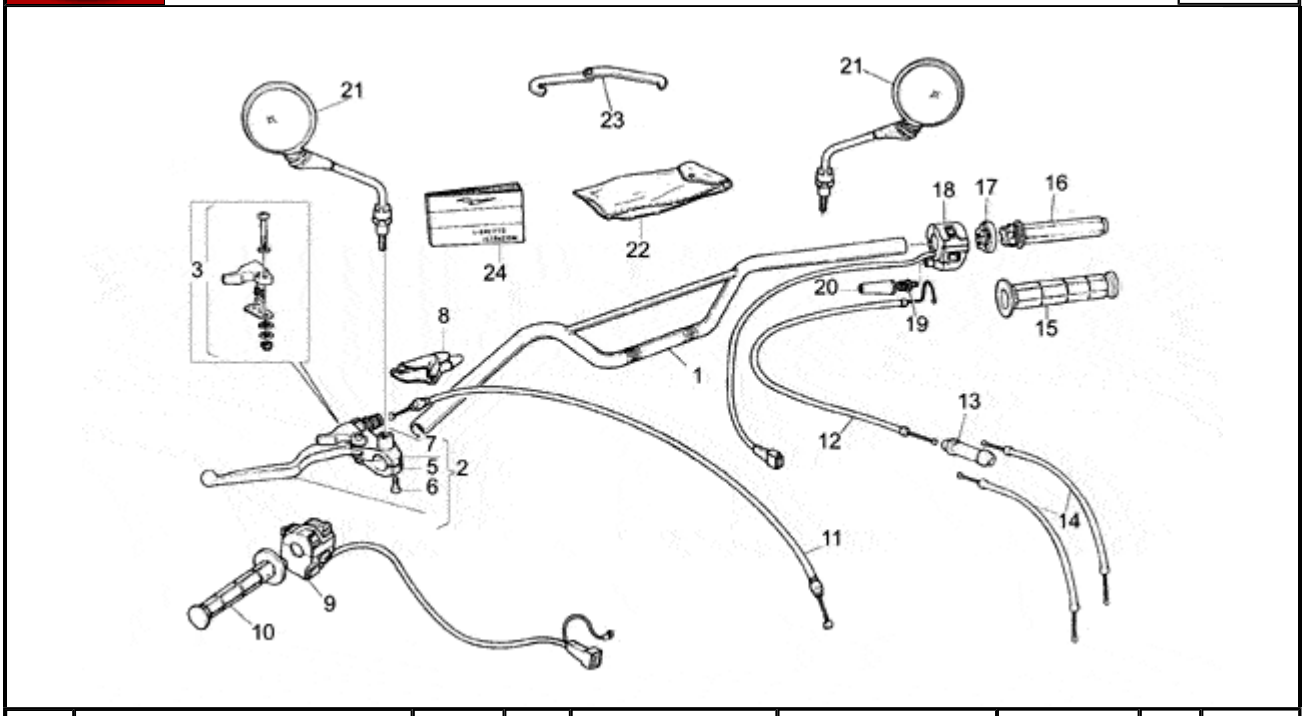

Pos.	Description	Year	I_M_	Country	Version	Code	Q.ty	P.Cod.
1	Handlebar	-	-	-	- -	GU27600315	1	
2	Clutch lever cpl.	-	-	-	- -	GU30605530	1	
3	Starter lever	-	-	-	- -	GU27659415	1	
5	U-bolt	-	-	-	- -	GU27601015	1	
6	Screw	-	-	-	- -	GU27601215	2	
7	Register	-	-	-	- -	GU30602500	1	
8	Protection	-	-	-	- -	GU27663815	1	
9	LH lights selector	-	-	-	- -	GU27738015	1	
10	Handgrip - pair	-	-	-	- -	GU19999415	1	
11	Clutch cable	-	-	-	- -	GU27093015	1	
12	Throttle cable	-	-	-	- -	GU27117515	1	
13	Splitter	-	-	-	- -	GU30607910	1	
14	Throttle cable	-	-	-	- -	GU27117775	2	
15	Handgrip - pair	-	-	-	- -	GU19999415	1	
16	Mobile body	-	-	-	- -	GU27603815	1	
17	Steering block	-	-	-	- -	GU27604415	1	
18	Throttle	-	-	-	- -	GU27738815	1	
19	Adjuster screw	-	-	-	- -	GU27603715	1	
20	Cap	-	-	-	- -	GU27117615	1	
21	Rearview mirror	-	-	-	- -	GU27769475	2	
22	Toolkit	-	-	-	- -	GU28929940	1	
23	Shock abs. adj. Wrench	-	-	-	- -	GU19912700	1	
24	Operator's handbook	-	-	D	- -	GU27900018	1	
	Operator's handbook	-	-	I	- -	GU27900015	1	
	Operator's handbook	-	-	UK	- -	GU27900016	1	
	Operator's handbook	-	-	F	- -	GU27900017	1	

NTX 350 1987-1990	GU056	00	TAB N.	13
FRONT MUDGUARD				

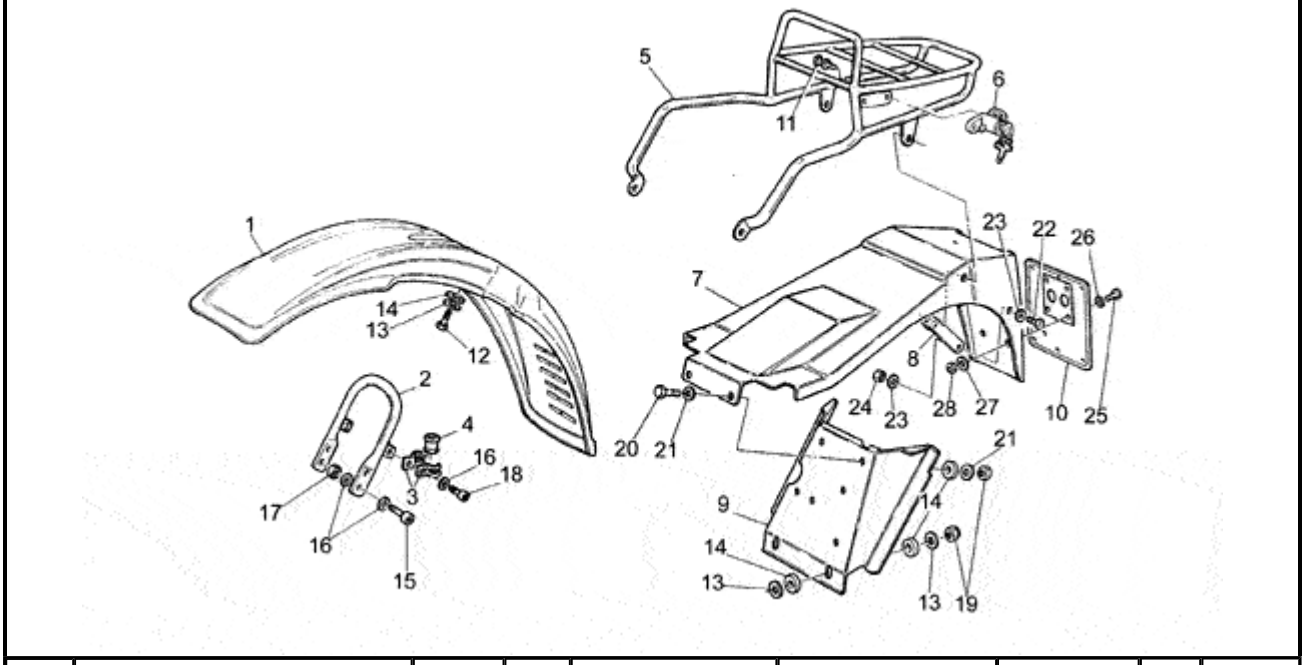

Pos.	Description	Year	I_M_	Country	Version	Code	Q.ty	P.Cod.
1	Front mudguard	-	-	-	- g	GU27434416	1	
	Front mudguard	-	-	-	- r	GU27434415	1	
2	Mudguard support U-bolt	-	-	-	- -	GU27436615	1	
3	Hose clamp	-	-	-	- -	GU27651315	4	
4	Ring	-	-	-	- -	GU17658260	2	
5	Luggage rack	-	-	-	- -	GU27466510	1	
6	Helmet lock	-	-	-	- -	GU66466815	1	
7	Rear mudguard	-	-	-	- -	GU27437010	1	
8	Support bracket	-	-	-	- -	GU27437871	1	
9	Splash guard	-	-	-	- -	GU27438716	1	
10	Number plate holder	-	-	-	- -	GU01474630	1	
11	Shear rivet	-	-	-	- -	GU66468115	2	
12	Screw	-	-	-	- -	GU98054325	4	
13	Washer 6,4x12x1,2	-	-	-	- -	GU95100141	12	
14	Rubber spacer	-	-	-	- -	GU93110060	14	
15	Screw	-	-	-	- -	GU98610325	4	
16	Special washer	-	-	-	- -	GU61013800	12	
17	Nut	-	-	-	- -	GU92601206	4	
18	Screw	-	-	-	- -	GU98612312	2	
19	Nut M6x1	-	-	-	- -	GU92630106	4	
20	Screw	-	-	-	- -	GU98054330	2	
21	Washer	-	-	-	- -	GU95000206	4	
22	Screw	-	-	-	- -	GU98074314	2	
23	Washer	-	-	-	- -	GU95000206	4	
24	Nut M6x1	-	-	-	- -	GU92630206	2	
25	Screw	-	-	-	- -	GU98200410	4	
26	Washer	-	-	-	- -	GU95000204	4	
27	Washer	-	-	-	- -	GU95129080	4	
28	Nut	-	-	-	- -	GU92602204	4	

NTX 350 1987-1990	GU056	00	TAB N.	14
FOOT RESTS - LATERAL STAND				

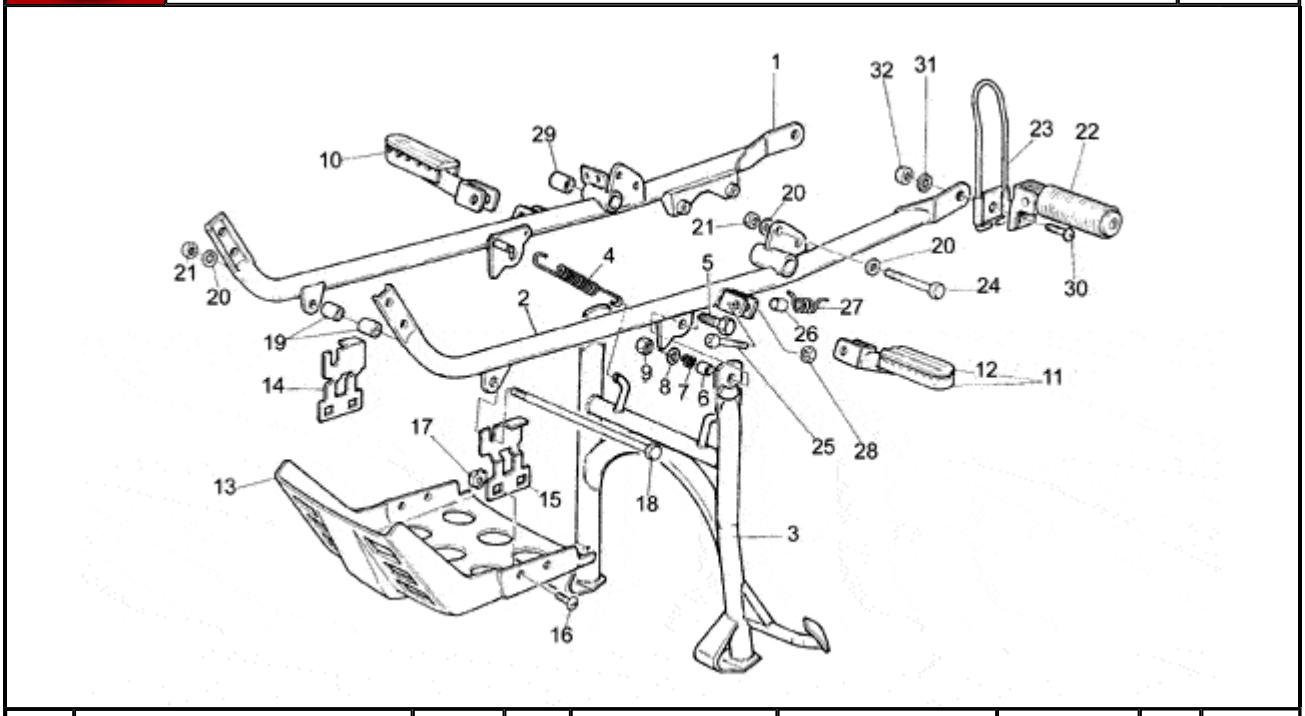

Pos.	Description	Year	I_M_	Country	Version	Code	Q.ty	P.Cod.
1	RH craddle arm	-	-	-	- gr	GU274203151	1	
2	LH craddle arm	-	-	-	- gr	GU274221151	1	
3	Central stand	-	-	-	- gr	GU274303151	1	
4	Lateral stand spring	-	-	-	- -	GU12434001	2	
5	Screw	-	-	-	- -	GU98054530	2	
6	Spacer	-	-	-	- -	GU91181114	2	
7	Spring	-	-	-	- -	GU94322215	1	
8	Washer	-	-	-	- -	GU95000210	3	
9	Nut M10x1,5	-	-	-	- -	GU92630510	2	
10	RH Foot rests	-	-	-	- -	GU27440210	1	
11	LH Foot rests	-	-	-	- -	GU27441310	1	
12	Footrest rubber	-	-	-	- -	GU27443210	2	
13	Sump guard	-	-	-	32196C -	GU27019610	1	
14	Plate	-	-	-	- -	GU27019810	1	
15	Plate	-	-	-	- -	GU27019811	1	
16	Screw	-	-	-	- -	GU98326014	4	
17	Captive nut	-	-	-	- -	GU92660601	4	
18	Screw	-	-	-	- -	GU27429515	1	
19	Bush	-	-	-	- -	GU19017000	1	
20	Washer	-	-	-	- -	GU95007210	5	
21	Nut	-	-	-	- -	GU92601210	3	
22	Rear footrest	-	-	-	- -	GU27442320	2	
23	LH front footrest guard	-	-	-	- -	GU27447520	2	
24	Screw	-	-	-	- -	GU98072565	2	
25	Screw	-	-	-	- -	GU98820445	2	
26	Spacer	-	-	-	- -	GU91180817	2	
27	Spring	-	-	-	- -	GU27441110	2	
28	Nut	-	-	-	- -	GU92630108	2	
29	Bush 19 mm	-	-	-	- -	GU18252050	4	
30	Screw	-	-	-	- -	GU98231022	2	
31	Washer 10,5X21X1	-	-	-	- -	GU14018400	2	
32	Nut	-	-	-	- -	GU92601210	2	

Revente Interdite - Revendita Vietata - Resaling Forbiden - Wiederverkauf Verboten

NTX 350 1987-1990	GU056	00	TAB N.	15
REAR BRAKE CALIPER				

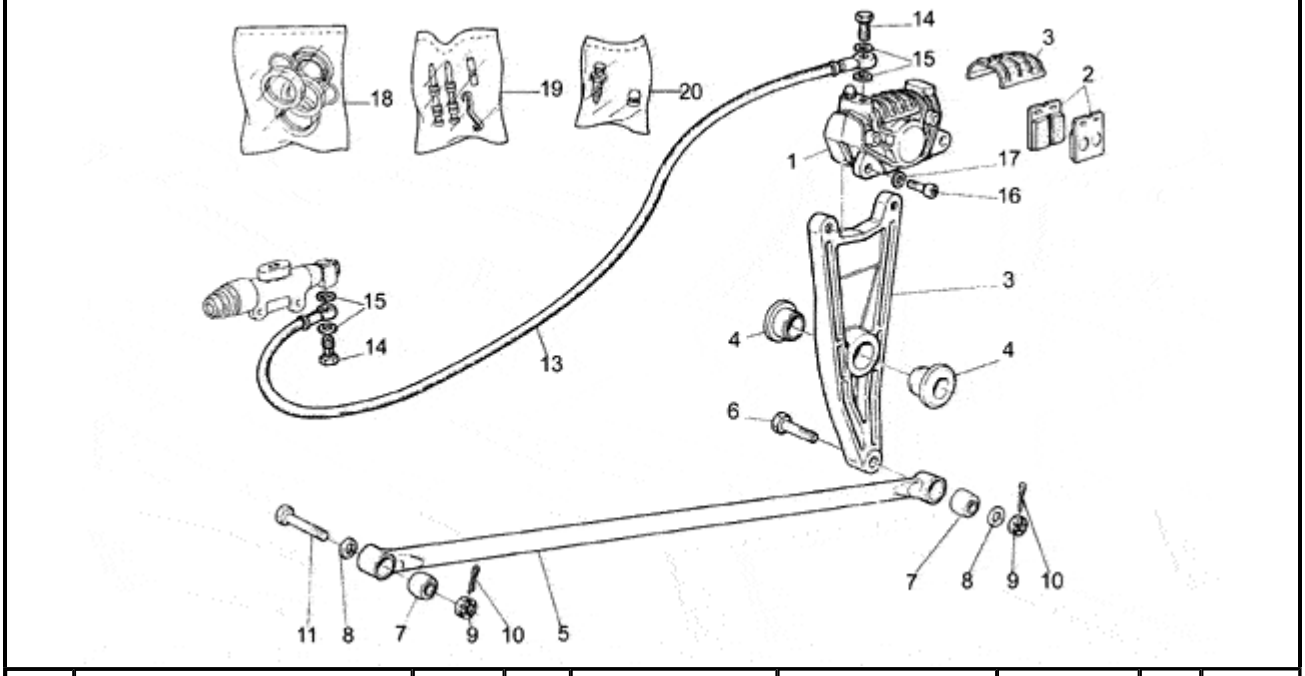

Pos.	Description	Year	I_M_	Country	Version	Code	Q.ty	P.Cod.
1	Rear brake caliper	-	-	-	- -	GU23653011	1	
2	Pads pair BREMBO	-	-	-	- -	GU27654610	1	
3	Clamp	-	-	-	- -	GU27655810	1	
4	Bush	-	-	-	- -	GU27636010	2	
5	Rod	-	-	-	- -	GU27636610	1	
6	Screw	-	-	-	- -	GU27636910	1	
7	Silent-block	-	-	-	- -	GU27551810	2	
8	Washer	-	-	-	- -	GU27636711	2	
9	Nut	-	-	-	- -	GU92731100	2	
10	Split pin	-	-	-	- -	GU95401218	2	
11	Screw	-	-	-	- -	GU27636810	1	
13	Rear brake hose	-	-	-	- -	GU27657110	1	
14	Oil pipe screw *	-	-	-	- -	GU95990028	2	
15	Gasket	-	-	-	- -	GU25656100	4	
16	Screw	-	-	-	- -	GU98612422	2	
17	Spring washer 8x15x0,3	-	-	-	- -	GU61270300	2	
18	Brake caliper rev. kit BREMBO	-	-	-	- -	GU39659000	1	
19	Pins+spring BREMBO	-	-	-	- -	GU39659100	1	
20	Bleeder+cap BREMBO D.6	-	-	-	- -	GU65659200	1	

NTX 350 1987-1990	GU056	00	TAB N.	16
FRONT MASTER CILINDER				

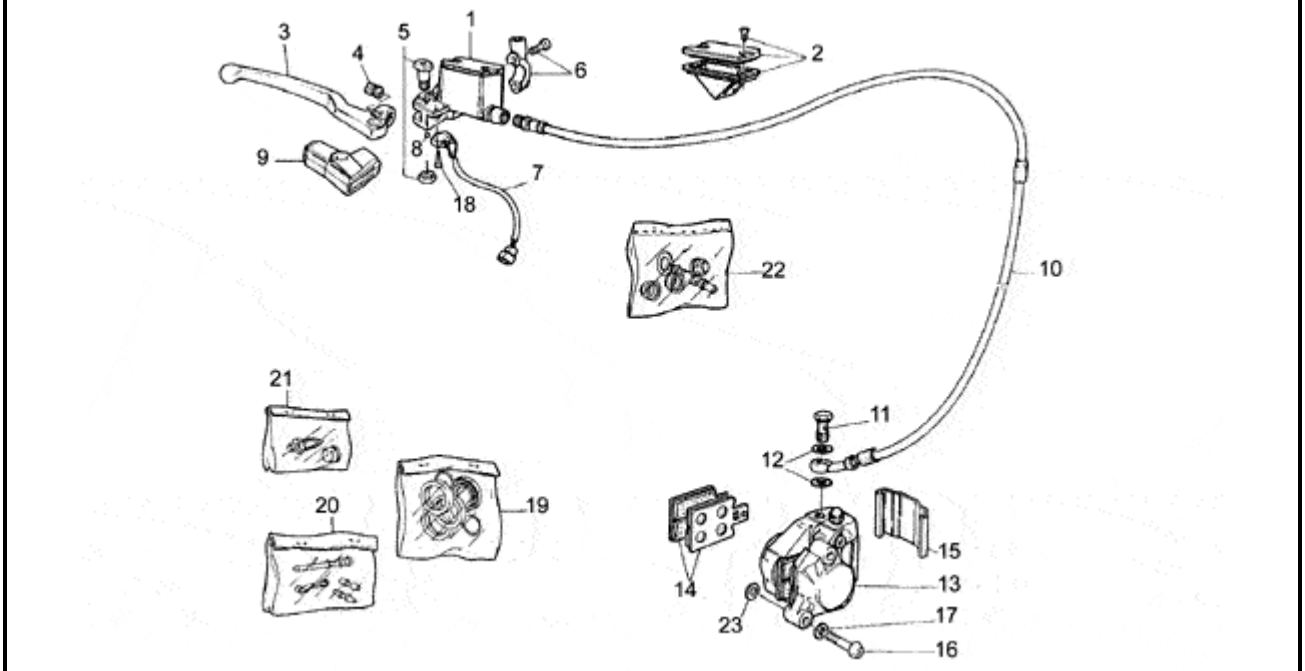

Pos.	Description	Year	I_M_	Country	Version	Code	Q.ty	P.Cod.
1	Front master cilinder	-	-	-	- -	GU27660115	1	
2	Pump cover	-	-	-	- -	GU27661115	1	
3	Brake lever	-	-	-	- -	GU27605615	1	
4	Screw	-	-	-	- -	GU27664315	1	
5	Pin	-	-	-	- -	GU27604815	1	
6	Bracket	-	-	-	- -	GU27664075	1	
7	Brake light switch	-	-	-	- -	GU27749815	1	
8	Ball	-	-	-	- -	GU92295708	1	
9	Cap	-	-	-	- -	GU27663615	1	
10	Front brake hose	-	-	-	- -	GU27658575	1	
11	Oil pipe screw *	-	-	-	- -	GU95990028	1	
12	Gasket	-	-	-	- -	GU25656100	2	
13	Front brake caliper	-	-	-	- -	GU27652310	1	
14	Pads pair BREMBO	-	-	-	- -	GU27654610	1	
15	Brake caliper cover	-	-	-	- -	GU30654700	1	
16	Screw	-	-	-	- -	GU98612425	2	
17	Spring washer 8x15x0,3	-	-	-	- -	GU61270300	2	
18	Self-tap screw	-	-	-	- -	GU99210213	2	
19	Brake caliper rev. kit	-	-	-	- -	GU27659010	1	
20	Pin+Brake spring	-	-	-	- -	GU30659101	1	
21	Bleeder+cap BREMBO D.10	-	-	-	- -	GU31659260	1	
22	Brake mast.cyl rev. kit	-	-	-	- -	GU27659315	1	
23	Washer 8,5X18X0,8	-	-	-	- -	GU95100251	1	
	Washer 8,5X18X0,5	-	-	-	- -	GU95100250	1	

Revente Interdite - Revendita Vietata - Resaling Forbiden - Wiederverkauf Verboten

NTX 350 1987-1990	GU056	00	TAB N.	17
REAR MASTER CYLINDER				

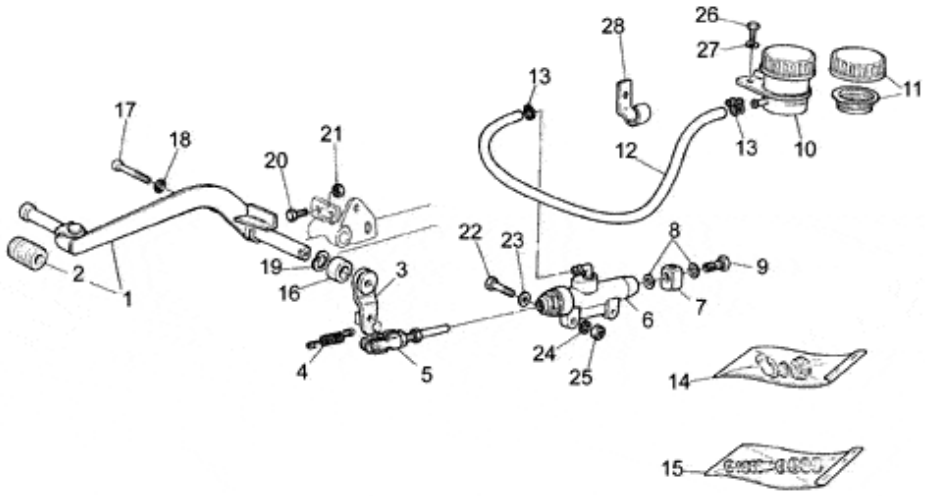

Pos.	Description	Year	I_M_	Country	Version	Code	Q.ty	P.Cod.
1	Brake lever	-	-	-	-	GU27677015	1	
2	Rubber spacer	-	-	-	-	GU30251025	1	
3	Lever	-	-	-	-	GU27667515	1	
4	Spring	-	-	-	-	GU27667615	1	
5	Pump rod	-	-	-	-	GU27675015	1	
6	Rear master cylinder	-	-	-	-	GU27667015	1	
7	Union	-	-	-	-	GU27668015	1	
8	Gasket	-	-	-	-	GU25656100	2	
9	Oil pipe screw	-	-	-	-	GU95990027	1	
10	Brake oil tank	-	-	-	-	GU65663500	1	
11	Tank cap	-	-	-	-	GU17661052	1	
12	Rear brake hose	-	-	-	-	GU00823950050	1	
13	Hose clamp	-	-	-	-	GU19157800	2	
14	Rear brake pump union	-	-	-	-	GU27659515	1	
15	Brake m.cyl seals rev. kit	-	-	-	-	GU27659375	1	
16	Spacer	-	-	-	-	GU27250715	1	
17	Screw M6X45	-	-	-	-	GU98620345	1	
18	Washer 6,4x10x0,7	-	-	-	-	GU14217901	1	
19	Spring washer	-	-	-	-	GU95129260	1	
20	Screw	-	-	-	-	GU98074320	1	
21	Nut	-	-	-	-	GU92601206	1	
22	Screw	-	-	-	-	GU98072330	2	
23	Washer	-	-	-	-	GU95000206	2	
24	Notched washer	-	-	-	-	GU95021106	2	
25	Nut	-	-	-	-	GU92601206	2	
26	Screw	-	-	-	-	GU98054214	2	
27	Washer 5,25x14x1,5	-	-	-	-	GU95100059	2	
28	Hose clamp	-	-	-	-	GU19718000	2	

Revente Interdite - Revendita Vietata - Resaling Forbiden - Wiederverkauf Verboten

NTX 350 1987-1990	GU056	00	TAB N.	18
FRONT WHEEL				

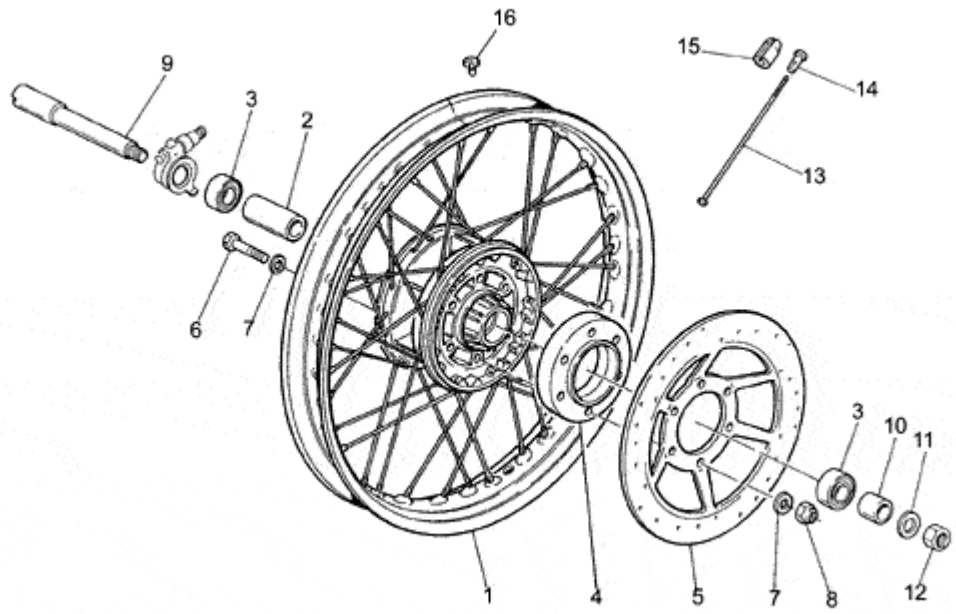

Pos.	Description	Year	I_M_	Country	Version	Code	Q.ty	P.Cod.
1	Front wheel	-	-	-	- gg	GU27610311	1	
2	Internal spacer	-	-	-	- -	GU39615201	1	
3	Bearing	-	-	-	- -	GU92204217	2	
4	Flange	-	-	-	- -	GU27611210	1	
5	Brake disc	-	-	-	- -	GU31613335	1	
6	Screw	-	-	-	- -	GU98052470	6	
7	Spring washer 8x15x0,3	-	-	-	- -	GU61270300	12	
8	Nut	-	-	-	- -	GU92630108	6	
9	Front wheel spindle	-	-	-	- -	GU27614110	1	
10	Spacer	-	-	-	- -	GU27616310	1	
11	Washer 17X27X2	-	-	-	- -	GU95004217	1	
12	Nut M16X1,5	-	-	-	- -	GU92602516	1	
13	Front wheel spoke	-	-	-	- -	GU27611610	36	
14	Nipples	-	-	-	- -	GU27611710	36	
15	Counterweight 10 gr.	-	-	-	- -	GU27616110	1	
	Counterweight 15 gr.	-	-	-	- -	GU27616111	1	
	Counterweight 20 gr.	-	-	-	- -	GU27616112	1	
	Counterweight 30 gr.	-	-	-	- -	GU27616113	1	
16	Drift	-	-	-	- -	GU19705900	1	

NTX 350 1987-1990	GU056	00	TAB N.	19
REAR WHEEL				

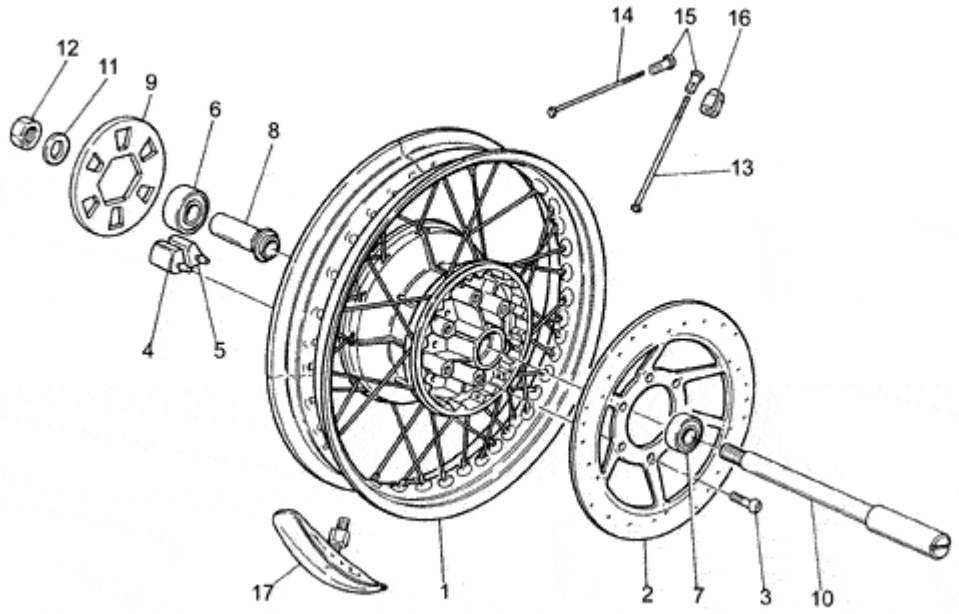

Pos.	Description	Year	I_M_	Country	Version	Code	Q.ty	P.Cod.
1	Rear wheel	-	-	-	- o	GU27630611	1	
	Rear wheel	-	-	-	- gg	GU27630610	1	
2	Brake disc	-	-	-	- -	GU31613335	1	
3	Screw	-	-	-	- -	GU98230825	6	
4	RH rubber coupling	-	-	-	- -	GU19632501	6	
5	LH rubber coupling	-	-	-	- -	GU19632502	6	
6	Bearing	-	-	-	- -	GU92204218	1	
7	Bearing	-	-	-	- -	GU92204217	1	
8	Spacer	-	-	-	- -	GU27633910	1	
9	Spacer	-	-	-	- -	GU27356910	1	
10	Rear wheel spindle	-	-	-	- -	GU27633310	1	
11	Washer	-	-	-	- -	GU14634400	1	
12	Nut M6X1,5	-	-	-	- -	GU92602316	1	
13	Rear wheel spoke, long	-	-	-	- -	GU27631410	18	
14	Rear wheel spoke, short	-	-	-	- -	GU27631110	18	
15	Nipples	-	-	-	- -	GU27611710	36	
16	Counterweight 10 gr.	-	-	-	- -	GU27616110	1	
	Counterweight 15 gr.	-	-	-	- -	GU27616111	1	
	Counterweight 20 gr.	-	-	-	- -	GU27616112	1	
	Counterweight 30 gr.	-	-	-	- -	GU27616113	1	
17	Inner tube fastener	-	-	-	- -	GU27619110	1	

NTX 350 1987-1990	GU056	00	TAB N.	20
FRONT/REAR SHOCK ABSORBER				

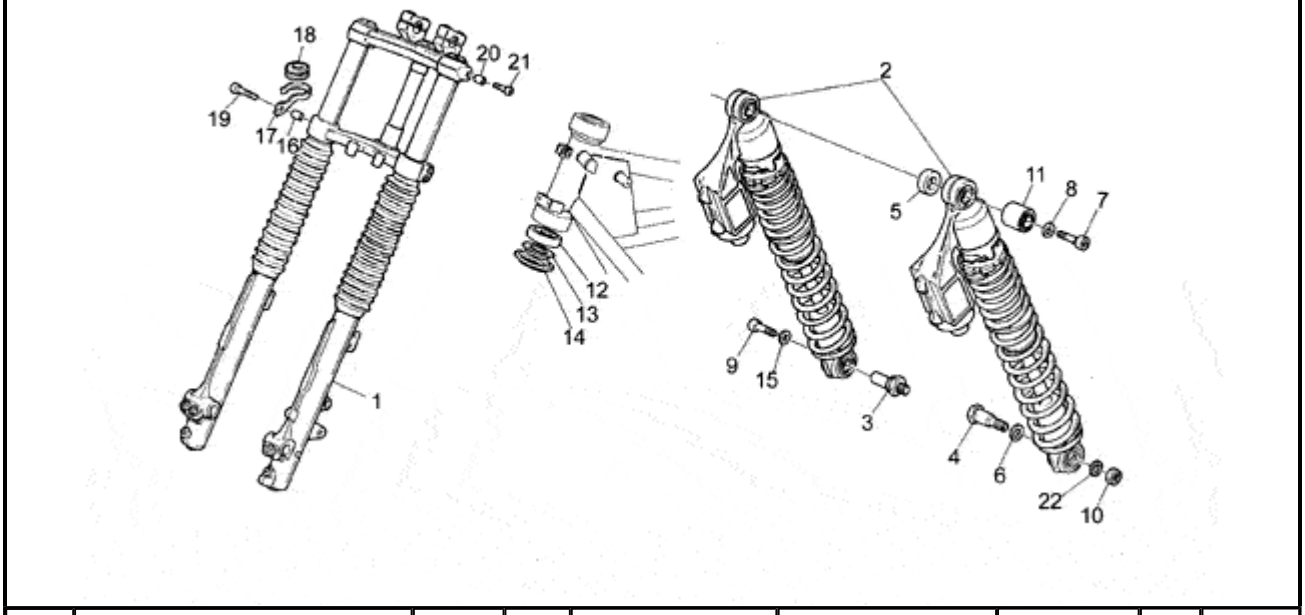

Pos.	Description	Year	I_M_	Country	Version	Code	Q.ty	P.Cod.
1	Front fork	-	-	-	- g	GU27490216	1	
	Front fork	-	-	-	- r	GU27490215	1	
2	Shock absorber-pair	-	-	-	- -	GU31999236	1	
3	Pin	-	-	-	- -	GU23555281	1	
4	Pin	-	-	-	- -	GU23555280	1	
5	Spacer	-	-	-	- -	GU91181407	2	
6	Washer	-	-	-	- -	GU95007210	1	
7	Screw	-	-	-	- -	GU98832420	2	
8	Washer	-	-	-	- -	GU95007208	2	
9	Screw	-	-	-	- -	GU98830416	1	
10	Nut	-	-	-	- -	GU92602411	1	
11	Silent-block	-	-	-	- -	GU27530532	4	
12	Tap.roller bearing	-	-	-	- -	GU92249225	2	
13	Clearance washer	-	-	-	- -	GU14516700	2	
14	Dust cover	-	-	-	- -	GU14517000	2	
15	Washer	-	-	-	- -	GU95100256	1	
16	Spacer	-	-	-	- -	GU27504915	1	
17	Cable-guide	-	-	-	- -	GU27658415	2	
18	Ring	-	-	-	- -	GU27658215	2	
19	Screw M6X35	-	-	-	- -	GU98620335	1	
20	Spacer	-	-	-	- -	GU91180802	1	
21	Screw M8X40	-	-	-	- -	GU98620440	1	
22	Notched washer	-	-	-	- -	GU95022110	1	

NTX 350 1987-1990	GU056	00	TAB N.	21
FRAME				

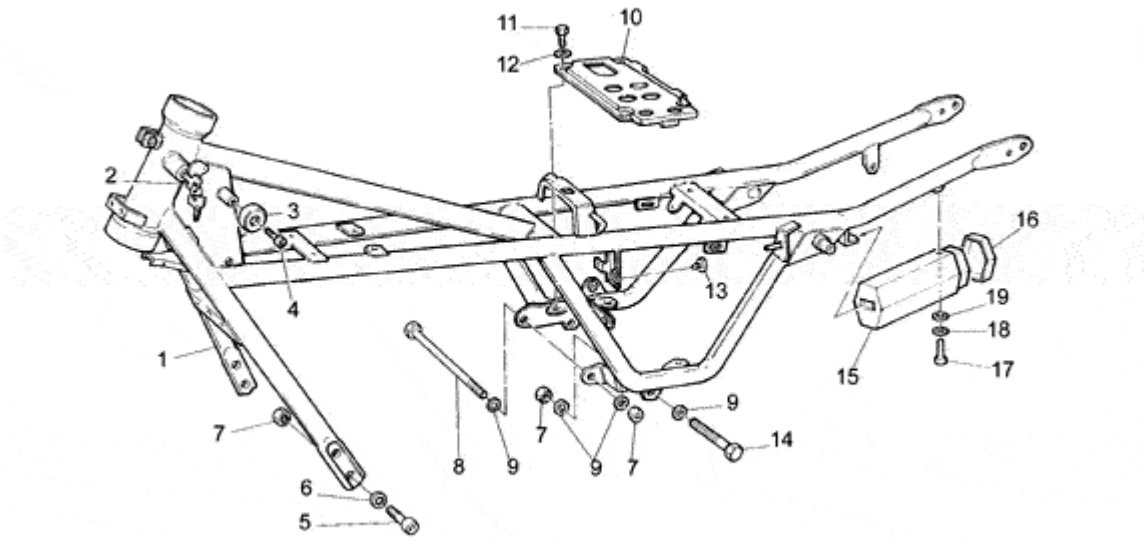

Pos.	Description	Year	I_M_	Country	Version	Code	Q.ty	P.Cod.
1	Frame	-	-	-	- gr	GU274001151	1	
2	Lock	-	-	-	- -	GU19782520	1	
3	Rubber spacer	-	-	-	- -	GU66103415	2	
4	Screw	-	-	-	- -	GU98622420	2	
5	Screw	-	-	-	- -	GU98612525	4	
6	Washer	-	-	-	- -	GU95120105	4	
7	Nut	-	-	-	- -	GU92601210	7	
8	Screw	-	-	-	- -	GU98110202	1	
9	Washer	-	-	-	- -	GU95007210	6	
10	Plate	-	-	-	- -	GU27418215	1	
11	Hex screw M8X16	-	-	-	- -	GU98054416	4	
12	Washer	-	-	-	- -	GU95000208	4	
13	Drift	-	-	-	- -	GU19705900	2	
14	Hex screw M10X55	-	-	-	- -	GU98072555	2	
15	Tool kit box	-	-	-	- -	GU27914515	1	
16	Cover	-	-	-	- -	GU27914615	1	
17	Screw M6x10	-	-	-	- -	GU98822310	1	
18	Washer 6,2X18X1	-	-	-	- -	GU95100118	1	
19	Rubber spacer	-	-	-	- -	GU93110060	1	

NTX 350 1987-1990	GU056	00	TAB N.	22
DRIVE SHAFT				

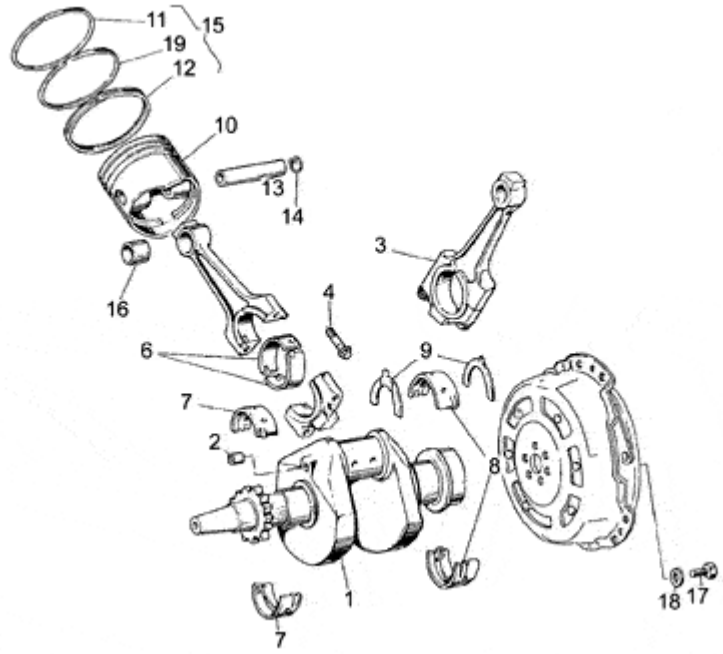

Pos.	Description	Year	I_M_	Country	Version	Code	Q.ty	P.Cod.
1	Drive shaft	-	-	-	- -	GU31064100	1	
2	Plug	-	-	-	- -	GU19065400	1	
3	Connecting rod	-	-	-	- -	GU19061521	2	
4	Screw	-	-	-	- -	GU19062221	4	
6	Bearing half-shell	-	-	-	- -	GU19062022	4	
7	Front main half-bearing	-	-	-	- -	GU19065623	2	
8	Rear main half-bearing	-	-	-	- -	GU19066522	2	
9	Shoulder	-	-	-	- -	GU31066480	2	
10	Piston	-	-	-	- -	GU31060400	2	
11	Ring	-	-	-	- -	GU19060750	4	
12	Scraper ring	-	-	-	- -	GU27061080	2	
13	Piston pin	-	-	-	- -	GU19061280	2	
14	Stop ring	-	-	-	- -	GU19061320	4	
15	Pistonring set	-	-	-	- -	GU27060680	2	
16	Bush	-	-	-	- -	GU19061821	2	
17	Screw	-	-	-	- -	GU19067700	6	
18	Washer 8,4X13X0,8	-	-	-	- -	GU14615901	6	
19	Piston ring	-	-	-	- -	GU27060880	2	

Revente Interdite - Revendita Vietata - Resaling Forbiden - Wiederverkauf Verboten

NTX 350 1987-1990	GU056	00	TAB N.	23
FUEL SUPPLY				

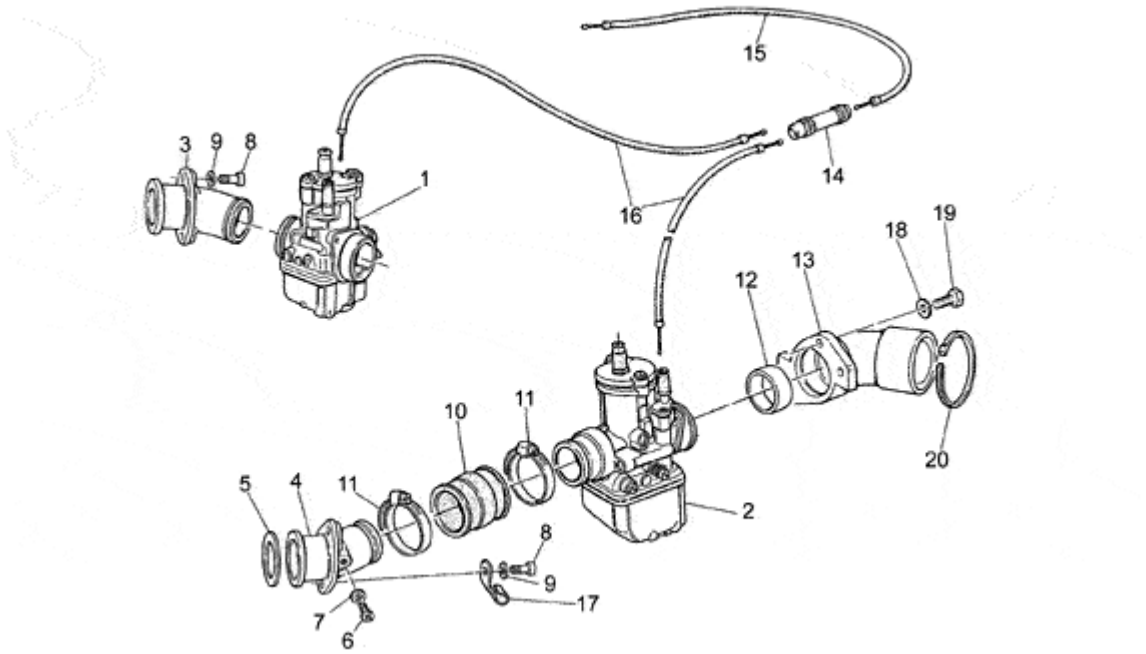

Pos.	Description	Year	I_M_	Country	Version	Code	Q.ty	P.Cod.
1	Carburettor RH PHBH 28	-	-	-	- -	GU27112615	1	
2	Carburettor LH PHBH 28	-	-	-	- -	GU27112616	1	
3	RH intake manifold	-	-	-	- -	GU31115000	1	
4	LH intake manifold	-	-	-	- -	GU31115001	1	
5	Gasket	-	-	-	- -	GU19115520	2	
6	Screw	-	-	-	- -	GU98310610	2	
7	Washer 6,25x10x1,5	-	-	-	- -	GU95100116	2	
8	Screw	-	-	-	- -	GU98812325	4	
9	Special washer	-	-	-	- -	GU61013800	4	
10	Hose	-	-	-	- -	GU19114320	2	
11	Hose clamp	-	-	-	- -	GU93305045	4	
12	Gasket ring	-	-	-	- -	GU19114680	2	
13	Manifold	-	-	-	- -	GU19114480	2	
14	Splitter	-	-	-	- -	GU30607910	1	
15	Choke cable	-	-	-	- -	GU27132815	2	
16	Choke cable	-	-	-	- -	GU27133515	1	
17	Hose clamp	-	-	-	- -	GU19718000	1	
18	Washer	-	-	-	- -	GU95000205	4	
19	Screw	-	-	-	- -	GU98054220	4	
20	Hose clamp 3,6x20,6	-	-	-	- -	GU14609650	2	

NTX 350 1987-1990	GU056	00	TAB N.	24
GEAR BOX				

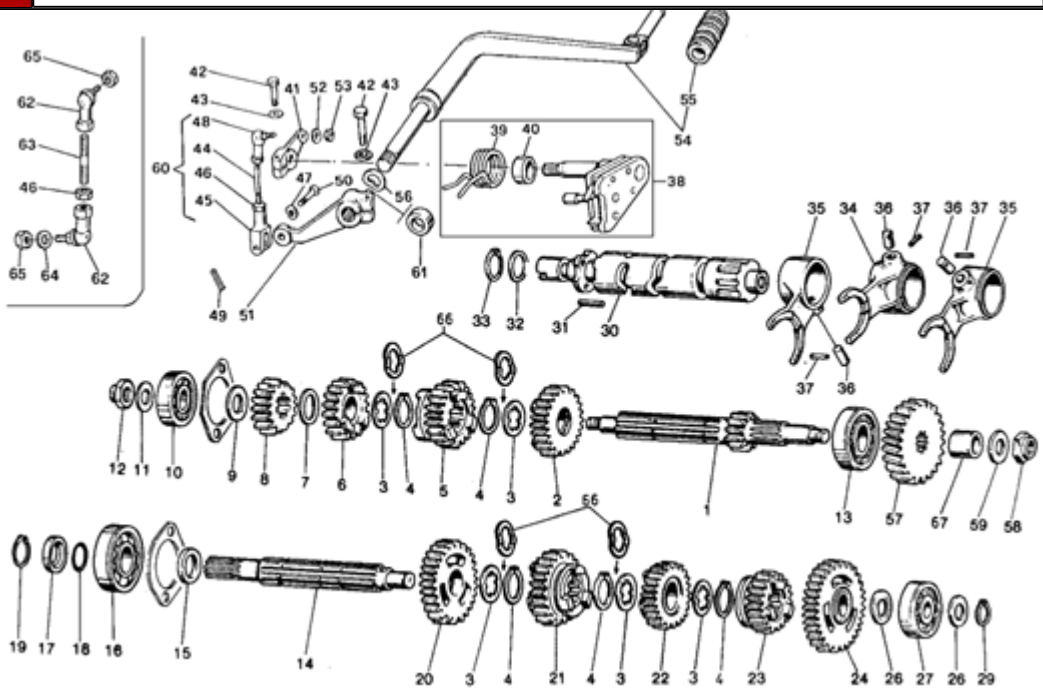

Pos.	Description	Year	I_M_	Country	Version	Code	Q.ty	P.Cod.
1	Primary gear shaft Z=11	-	-	-	- -	GU19210520	1	
2	Gear 5a AS Z=22	-	-	-	- -	GU19212020	1	
3	Thrust washer mm1	-	-	-	- -	GU19215420	5	
4	Circlip	-	-	-	- -	GU90271220	5	
5	Gear 4a AS Z=22	-	-	-	- -	GU19211820	1	
6	Gear 3a AS Z=18	-	-	-	- -	GU19211420	1	
7	Thrust washer	-	-	-	- -	GU19214620	1	
8	Gear	-	-	-	- -	GU19211320	1	
9	Washer	-	-	-	- -	GU19212800	1	
10	Ball bearing	-	-	-	- -	GU92201415	1	
11	Clearance washer	-	-	-	- -	GU39238100	1	
12	Nut	-	-	-	- -	GU10054100	1	
13	Bearing 20X47X14	-	-	-	- -	GU92201220	1	
14	Driven shaft	-	-	-	- -	GU19213620	1	
15	Spacer	-	-	-	- -	GU19212900	1	
16	Bearing 20X47X14	-	-	-	- -	GU92201220	1	
17	Spacer	-	-	-	- -	GU19213720	1	
18	Gasket ring 18,77X1,78	-	-	-	- -	GU90706188	1	
19	Circlip	-	-	-	- -	GU90271121	1	
20	Gear	-	-	-	- -	GU19214501	1	
21	Gear	-	-	-	- -	GU19214820	1	
22	Gear	-	-	-	- -	GU19215121	1	
23	Gear	-	-	-	- -	GU19215220	1	
24	Gear	-	-	-	- -	GU19214001	1	
26	Spacer	-	-	-	- -	GU35214300	2	
27	Ball bearing	-	-	-	- -	GU92201415	1	
29	Circlip	-	-	-	- -	GU90271115	1	
30	Shift cam	-	-	-	- -	GU19234420	1	
31	Pin	-	-	-	- -	GU19234600	4	
32	Spacer 1 mm	-	-	-	- -	GU19355300	1	
33	Snap ring	-	-	-	- -	GU90271020	1	
34	Fork AP	-	-	-	- -	GU19231220	1	
35	Fork AS	-	-	-	- -	GU19231020	2	

Revente Interdite - Revendita Vietata - Resaling Forbiden - Wiederverkauf Verboten

36	Roller	-	-	-	-	-	GU92297909	3
37	Pin	-	-	-	-	-	GU95520316	3
38	Pre-selector kit	-	-	-	01397N	-	GU20999520	1
39	Spring	-	-	-	01397N	-	GU28238261	1
	Spring	-	-	-	-	-	GU60238200	1
40	Spacer	-	-	-	01397N	-	GU20208520	1
	Bush	-	-	-	-	-	GU91182010	1
41	Shift lever	-	-	-	-	-	GU19258220	1
42	Screw	-	-	-	-	-	GU98072325	2
43	Notched washer	-	-	-	-	-	GU95021106	2
44	Tie rod	-	-	-	-	-	GU18257950	1
45	Fork	-	-	-	-	-	GU12629800	1
46	Nut	-	-	-	-	-	GU95602206	2
47	Washer	-	-	-	-	-	GU95129110	1
48	Ball joint	-	-	-	-	-	GU18258101	1
49	Split pin	-	-	-	-	-	GU95500222	1
50	Pin	-	-	-	-	-	GU95770265	1
51	Lever	-	-	-	-	-	GU19256920	1
52	Spring washer	-	-	-	-	-	GU60013800	1
53	Nut M6x1	-	-	-	-	-	GU92630106	1
54	Gear lever	-	-	-	-	-	GU27250815	1
55	Rubber spacer	-	-	-	-	-	GU30251025	1
56	Spring washer	-	-	-	-	-	GU95129260	1
57	Idle gear Z=25	-	-	-	-	-	GU27211111	1
58	Nut	-	-	-	-	-	GU10054100	1
59	Clearance washer	-	-	-	-	-	GU39238100	1
60	Change gear tie rod compl.	-	-	-	-	-	GU19257701	1
61	Spacer	-	-	-	-	-	GU27250715	1
62	Fork	-	-	-	2A	-	GU28258160	2
63	Stud bolt	-	-	-	2A	-	GU27257715	1
64	Washer	-	-	-	2A	-	GU95000206	1
65	Nut M6x1	-	-	-	2A	-	GU92630106	2
66	Washer	-	-	-	-	-	GU19214320	4
67	Bush	-	-	-	-	-	GU19266720	1

NTX 350 1987-1990	GU056	00	TAB N.	25
CARBURETTORS				

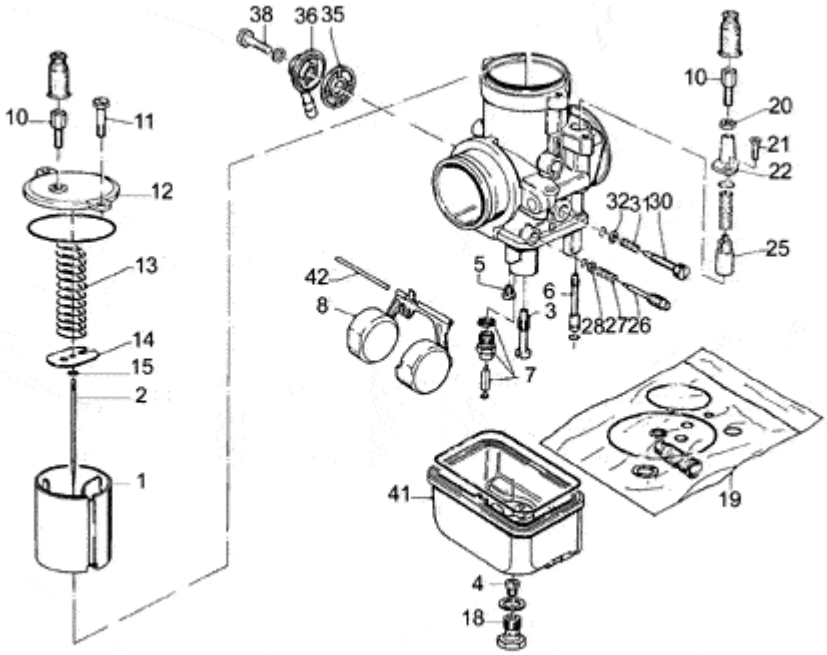

Pos.	Description	Year	I_M_	Country	Version		Code	Q.ty	P.Cod.
1	Gas valve 30	-	-	-	-	-	GU27934820	2	
2	Conical pin 19-2a	-	-	-	-	-	GU23937710	2	
3	Needle valve	-	-	-	-	-	GU27935520	2	
4	Main jet	-	-	-	-	-	GU17935767	2	
5	Idle jet 42	-	-	-	-	-	GU23935910	2	
6	Starter jet 60	-	-	-	-	-	GU19936000	2	
7	Needle valve	-	-	-	-	-	GU19934600	2	
8	Float gr.9,5	-	-	-	-	-	GU27934315	2	
10	Wire tensioner screw	-	-	-	-	-	GU12937200	2	
11	Screw	-	-	-	-	-	GU14934650	2	
12	Cover	-	-	-	-	-	GU19935080	2	
13	Gas valve return spring	-	-	-	-	-	GU19937180	2	
14	Plate	-	-	-	-	-	GU19938580	2	
15	Conical pin clip	-	-	-	-	-	GU65933600	2	
18	Plug with OR	-	-	-	-	-	GU10933700	2	
19	Gaskets set	-	-	-	-	-	GU19939980	2	
20	Nut	-	-	-	-	-	GU19938880	4	
21	Screw	-	-	-	-	-	GU13937900	2	
22	Starter device cover	-	-	-	-	-	GU17937450	2	
25	Starter valve	-	-	-	-	-	GU13937800	2	
26	Adj.min.eng.speed screw	-	-	-	-	-	GU13936200	2	
27	Spring	-	-	-	-	-	GU13936300	2	
28	Flat washer	-	-	-	-	-	GU65933700	2	
30	Gas valve adjuster screw	-	-	-	-	-	GU13936600	2	
31	Spring	-	-	-	-	-	GU13936700	2	
32	Flat washer	-	-	-	-	-	GU14931650	2	
35	Fuel filter	-	-	-	-	-	GU43934000	2	
36	Fuel pipe union cap	-	-	-	-	-	GU13934600	2	
38	Cap fixing screw	-	-	-	-	-	GU10934900	2	
41	Aluminium float chamber	-	-	-	-	-	GU19934480	2	
	Float chamber plastica	-	-	-	03399N	-	GU31934460	2	
42	Float pin	-	-	-	-	-	GU13933100	2	

NTX 350 1987-1990	GU056	00	TAB N.	26
CRANKCASE				

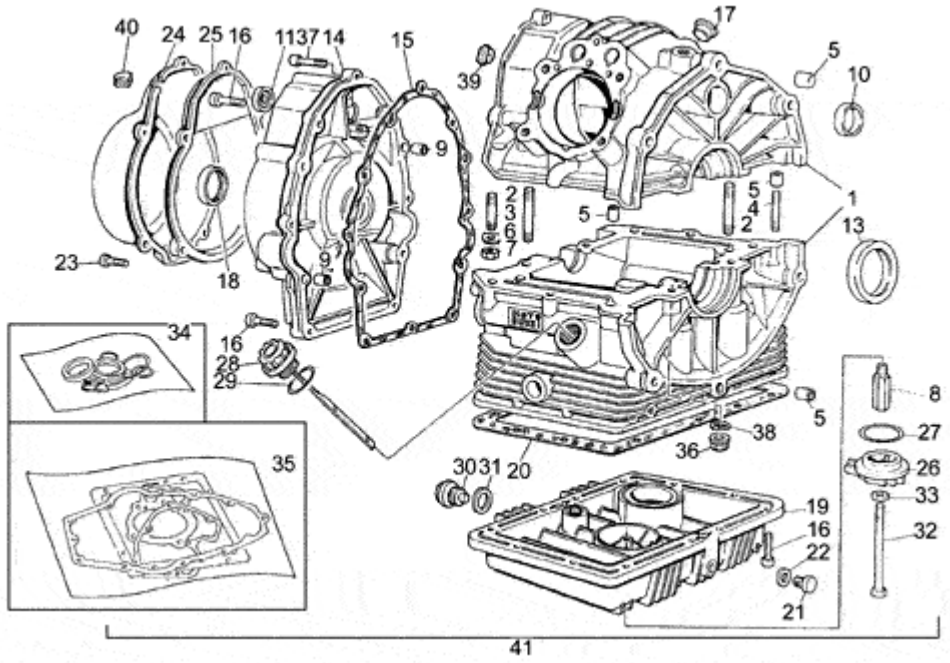

Pos.	Description	Year	I_M_	Country	Version	Code	Q.ty	P.Cod.
1	Crankcase	-	-	-	- -	GU31000100	1	
2	Stud bolt	-	-	-	- -	GU96451560	4	
3	Stud bolt	-	-	-	- -	GU96451430	4	
4	Stud bolt	-	-	-	- -	GU96508055	2	
5	Bush	-	-	-	- -	GU19015020	4	
6	Spring washer 8x15x0,3	-	-	-	- -	GU61270300	6	
7	Nut	-	-	-	- -	GU92601208	6	
8	Union	-	-	-	- -	GU19003800	1	
9	Bush 6,6x9x13	-	-	-	- -	GU19002020	2	
10	Plug	-	-	-	- -	GU19016320	1	
11	Gasket ring	-	-	-	- -	GU90401530	1	
13	Gasket ring	-	-	-	- -	GU90405367	1	
14	Timing system cover	-	-	-	- -	GU31001431	1	
15	Gasket	-	-	-	- -	GU19001200	1	
16	Screw	-	-	-	- -	GU98610325	22	
17	Plug	-	-	-	- -	GU19017120	1	
18	Gasket ring 28x38x7	-	-	-	- -	GU90402840	1	
19	Motor oil cup	-	-	-	- -	GU23003510	1	
20	Gasket	-	-	-	- -	GU19003602	1	
21	Oil plug	-	-	-	- -	GU95980213	1	
22	Gasket	-	-	-	- -	GU10528900	1	
23	Hex socket screw M6x18	-	-	-	- -	GU98610335	5	
24	Cover	-	-	-	- -	GU27001636	1	
25	Flange	-	-	-	- -	GU27001136	1	
26	Plug	-	-	-	- -	GU31003431	1	
27	O-ring	-	-	-	- -	GU90706444	1	
28	Oil filler plug	-	-	-	- -	GU19004920	1	
29	Gasket ring	-	-	-	- -	GU90706282	1	
30	Oil filler plug	-	-	-	- -	GU28004950	1	
31	Gasket 20,1x28x2	-	-	-	- -	GU95100709	1	
32	Bolt	-	-	-	- -	GU98072490	1	
33	Gasket 8,25x15x1	-	-	-	- -	GU12154200	1	
34	Oil seals - set	-	-	-	- -	GU31999565	1	

Revente Interdite - Revendita Vietata - Resaling Forbiden - Wiederverkauf Verboten

35	Engine set gasket	-	-	-	-	-	GU19999080	1
36	Column nut	-	-	-	-	-	GU92660010	4
37	Screw M6x30	-	-	-	-	-	GU98610330	2
38	Washer 10,5X18X0,8	-	-	-	-	-	GU95129180	4
39	Gasket	-	-	-	-	-	GU31016900	1
40	Rubber spacer	-	-	-	-	-	GU19007700	1
41	Engine w/o gearbox, blank	-	-	-	-	-	GU27991035	1

Revente Interdite - Revendita Vietata - Resaling Forbiden - Wiederverkauf Verboten

NTX 350 1987-1990	GU056	00	TAB N.	27
CYLINDER HEAD				

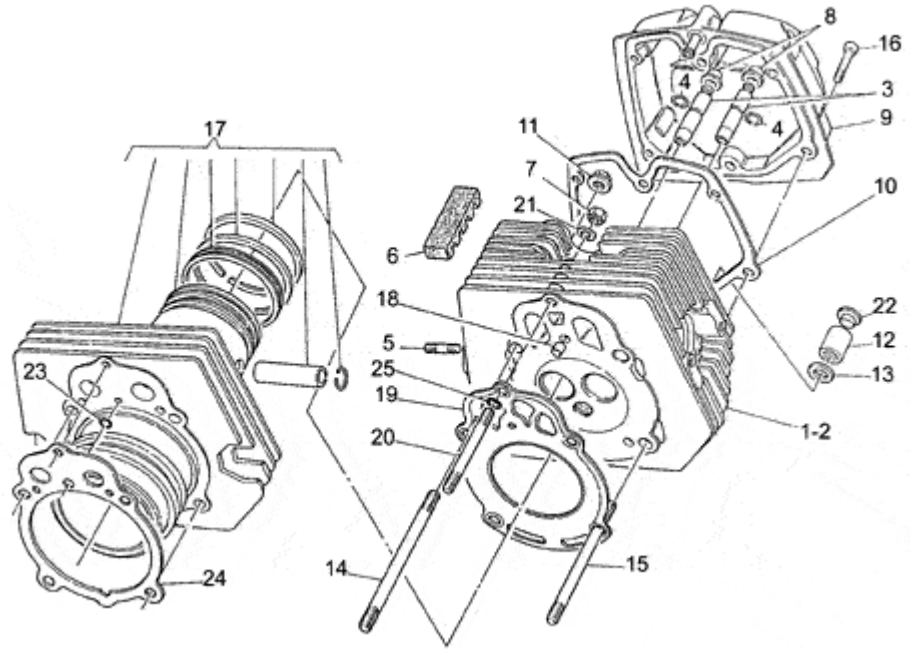

Pos.	Description	Year	I_M_	Country	Version	Code	Q.ty	P.Cod.
1	RH cylinder head	-	-	-	- -	GU23022170	1	
2	LH cylinder head	-	-	-	- -	GU23022270	1	
3	Valve guide	-	-	-	- -	GU61036801	4	
4	Snap ring	-	-	-	- -	GU90353009	4	
5	Stud bolt	-	-	-	- -	GU96506042	4	
6	Anti-vibration plate	-	-	-	- -	GU19025300	4	
7	Nut	-	-	-	- -	GU23021910	2	
8	Oil seal	-	-	-	- -	GU19037820	4	
9	Valves cover	-	-	-	- -	GU31023531	2	
10	Gasket	-	-	-	- -	GU19023700	2	
11	Column nut	-	-	-	- -	GU92660010	4	
12	Nut	-	-	-	- -	GU31021900	4	
13	Washer 10,5X18X0,8	-	-	-	- -	GU95129180	4	
14	Long tie rod	-	-	-	- -	GU96510177	4	
15	Short tie rod	-	-	-	- -	GU96510120	4	
16	Hex socket screw M6X25	-	-	-	- -	GU98622325	12	
17	Cylinder with piston	-	-	-	- -	GU31060100	2	
18	Bush	-	-	-	- -	GU19021320	2	
19	Gasket	-	-	-	- -	GU27022080	2	
20	Tie rod	-	-	-	- -	GU96500102	2	
21	Spring washer 8x15x0,3	-	-	-	- -	GU61270300	2	
22	Plug	-	-	-	- -	GU93180245	4	
23	O-ring	-	-	-	- -	GU61027200	2	
24	Gasket	-	-	-	- -	GU27020820	2	
25	O-ring	-	-	-	- -	GU90706076	2	

NTX 350 1987-1990	GU056	00	TAB N.	28
TIMING SYSTEM				

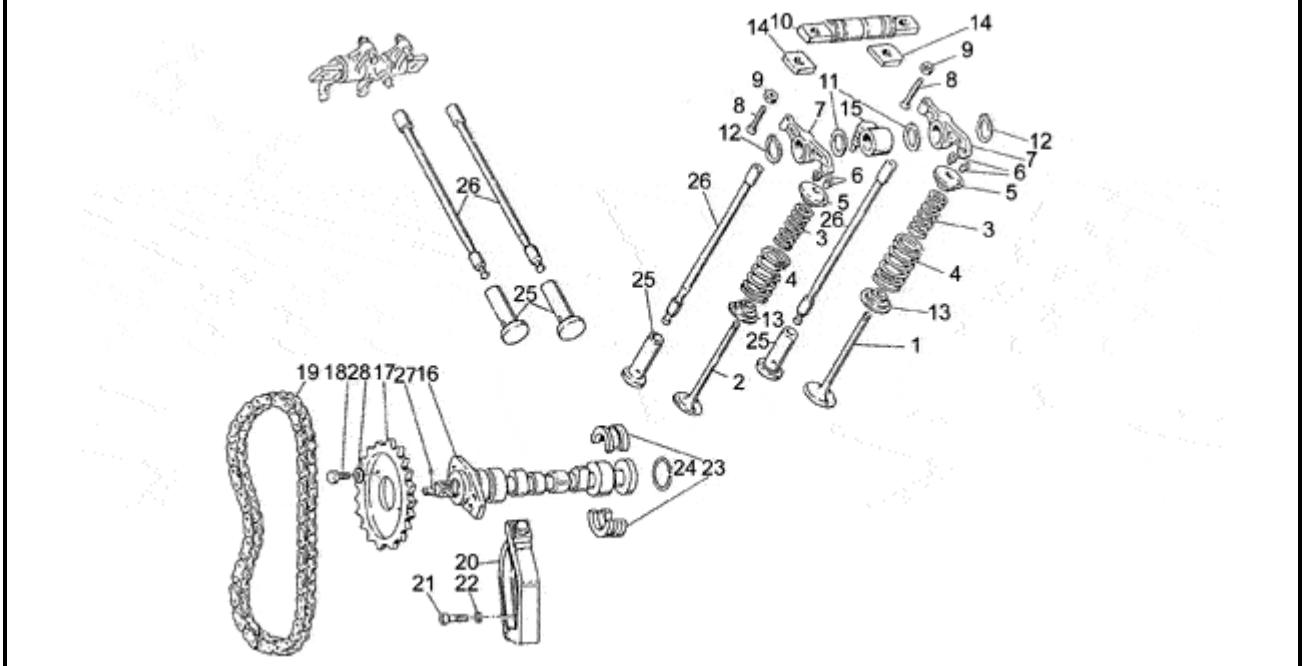

Pos.	Description	Year	I_M_	Country	Version	Code	Q.ty	P.Cod.
1	Intake valve	-	-	-	- -	GU19036082	2	
2	Exhaust valve	-	-	-	- -	GU19036183	2	
3	Spring	-	-	-	- -	GU61037600	4	
4	Spring	-	-	-	- -	GU61037500	4	
5	Upper cup	-	-	-	- -	GU61038000	4	
6	Half-cone	-	-	-	- -	GU61038100	8	
7	Rocker arm assy.	-	-	-	- -	GU19030500	4	
8	Screw	-	-	-	- -	GU19034000	4	
9	Nut M6x1	-	-	-	- -	GU92602406	4	
10	Rocker shaft	-	-	-	- -	GU19032080	2	
11	Thrust washer	-	-	-	- -	GU19032380	4	
12	Circlip	-	-	-	- -	GU90271018	4	
13	Lower cup	-	-	-	- -	GU61037000	4	
14	Spacer	-	-	-	- -	GU19032980	4	
15	Hose	-	-	-	- -	GU19027500	2	
16	Camshaft	-	-	-	- -	GU27053362	1	
17	Timing system gear	-	-	-	- -	GU19054521	1	
18	Bolt	-	-	-	- -	GU61054900	2	
19	Camshaft chain	-	-	-	- -	GU19058021	1	
20	Chain stretching drive	-	-	-	- -	GU19058220	1	
21	Screw	-	-	-	- -	GU98822316	1	
22	Washer	-	-	-	- -	GU95129115	1	
23	Sector	-	-	-	- -	GU19055700	2	
24	Snap ring	-	-	-	- -	GU90353029	1	
25	Tappet	-	-	-	- -	GU19045861	4	
26	Rocker arm rod	-	-	-	- -	GU31045000	4	
27	Roller	-	-	-	- -	GU95512035	1	
28	Safety washer	-	-	-	- -	GU23217800	2	

NTX 350 1987-1990	GU056	00	TAB N.	29
CLUTCH				

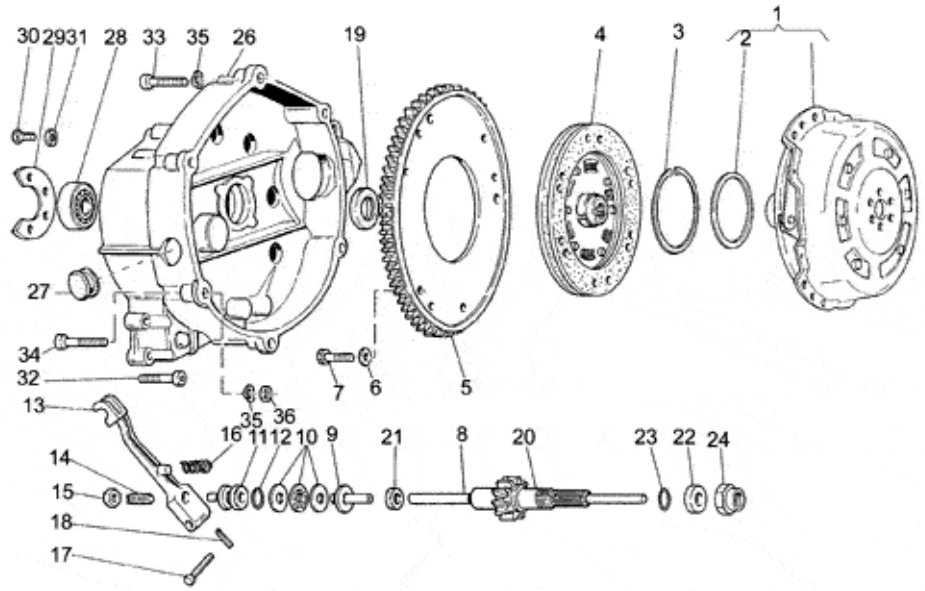

Pos.	Description	Year	I_M_	Country	Version	Code	Q.ty	P.Cod.
1	Clutch control	-	-	-	-	GU19080161	1	
2	New cup type	-	-	-	-	GU19083462	1	
3	Snap ring	-	-	-	-	GU90272075	1	
4	Driven clutch disc	-	-	-	-	GU27084420	1	
5	Chain ring MOTOPLAT	-	-	-	-	GU19067900	1	
6	Washer 6,4x10x0,7	-	-	-	-	GU14217901	6	
7	Hex screw M6X16	-	-	-	-	GU98054316	6	
8	Rod	-	-	-	-	GU20085720	1	
9	Inner body	-	-	-	-	GU14086000	1	
10	Thrust bearing	-	-	-	-	GU12087001	1	
11	Outer body	-	-	-	-	GU14086100	1	
12	O-ring 17,13x2,62	-	-	-	-	GU90706170	1	
13	Clutch relese shaft	-	-	-	-	GU14090201	1	
14	Adjuster screw	-	-	-	-	GU14090400	1	
15	Nut M8X1	-	-	-	-	GU92602508	1	
16	Lever return spring	-	-	-	-	GU94321105	1	
17	Pin 7x39	-	-	-	-	GU95780271	1	
18	Split pin	-	-	-	-	GU95500222	1	
19	Gasket ring 28x40x7	-	-	-	-	GU90402841	1	
20	Gasket ring	-	-	-	-	GU27210710	1	
21	Gasket ring 6x16x7	-	-	-	-	GU90400616	1	
22	Spacer	-	-	-	-	GU19213720	1	
23	Gasket ring 18,77X1,78	-	-	-	-	GU90706188	1	
24	Nut	-	-	-	-	GU19356700	1	
26	Clutch drum	-	-	-	-	GU31200401	1	
27	Plug	-	-	-	-	GU93180220	1	
28	Bearing	-	-	-	-	GU90201220	1	
29	Bearing fixing plate	-	-	-	-	GU19203420	1	
30	Screw	-	-	-	-	GU98054314	3	
31	Washer 6,4x10x0,7	-	-	-	-	GU14217901	3	
32	Screw M6x30	-	-	-	-	GU98610330	11	
33	Screw	-	-	-	-	GU98610435	3	
34	Screw	-	-	-	-	GU98620450	1	
35	Spring washer 8x15x0,3	-	-	-	-	GU61270300	6	
36	Nut	-	-	-	-	GU92601208	1	

NTX 350 1987-1990	GU056	00	TAB N.	30
EXHAUST UNIT				

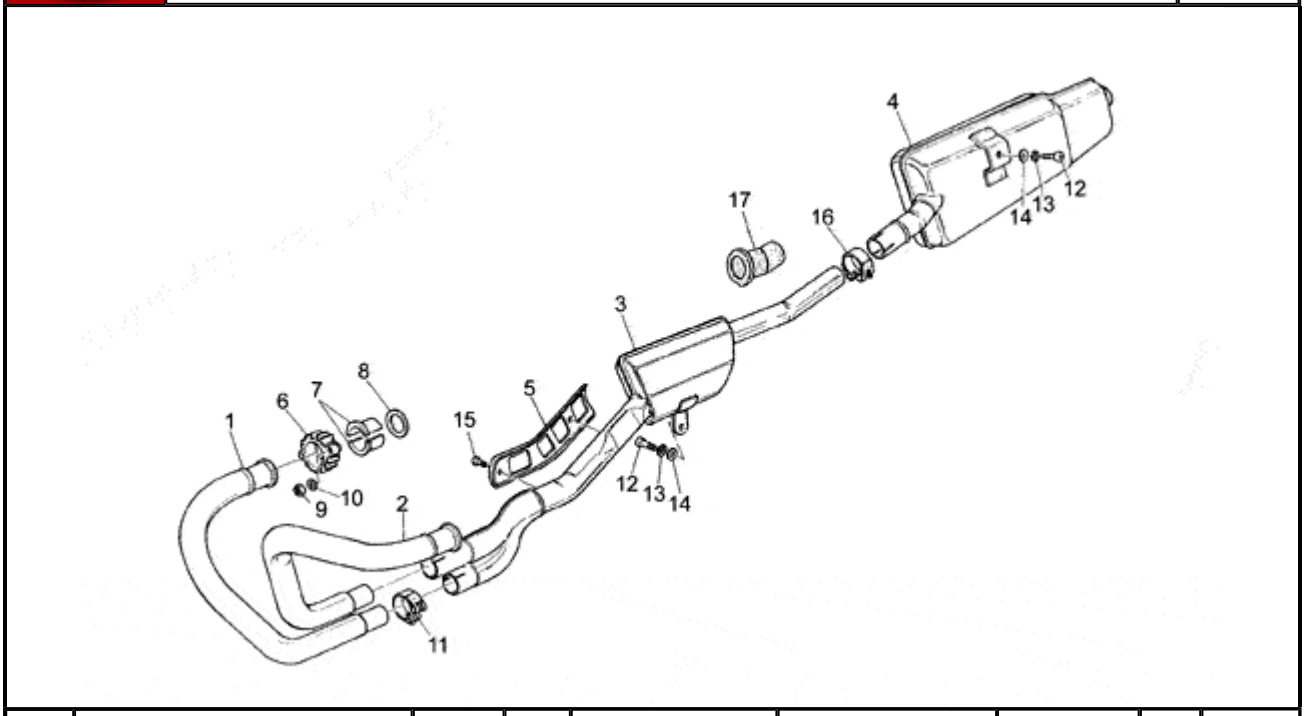

Pos.	Description	Year	I_M_	Country	Version	Code	Q.ty	P.Cod.
1	RH exhaust pipe	-	-	-	- -	GU27120715	1	
2	LH exhaust pipe	-	-	-	- -	GU27120716	1	
3	Expansion chamber	-	-	-	- -	GU27123915	1	
4	Silencer	-	-	-	- -	GU27122915	1	
5	Exhaust pipes cover	-	-	-	- -	GU27121915	1	
6	Ring nut	-	-	-	- -	GU61025100	2	
7	Spacer	-	-	-	- -	GU61025400	4	
8	Gasket	-	-	-	- -	GU19025280	2	
9	Nut	-	-	-	- -	GU92701062	4	
10	Special washer	-	-	-	- -	GU61013800	4	
11	Hose clamp	-	-	-	- -	GU27123415	2	
12	Screw	-	-	-	- -	GU98822416	2	
13	Spring washer 8x15x0,3	-	-	-	- -	GU61270300	1	
14	Washer	-	-	-	- -	GU95000208	1	
15	Screw	-	-	-	- -	GU98290608	2	
16	Hose clamp	-	-	-	- -	GU27123415	1	
17	Rubber spacer	-	-	-	- -	GU27126615	1	

Revente Interdite - Revendita Vietata - Resaling Forbiden - Wiederverkauf Verboten

NTX 350 1987-1990	GU056	00	TAB N.	31
OIL PUMP-FILTER				

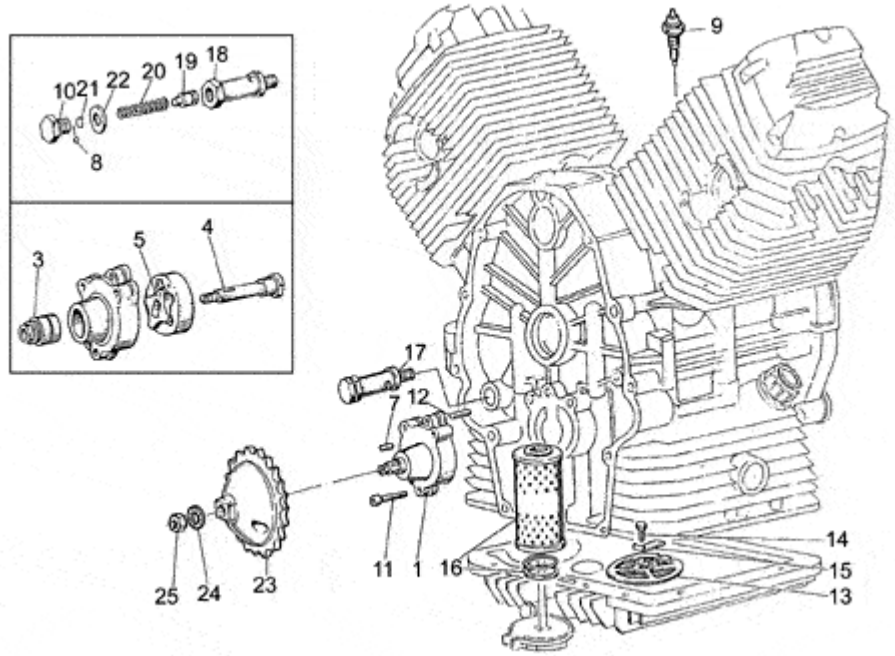

Pos.	Description	Year	I_M_	Country	Version		Code	Q.ty	P.Cod.
1	Oil pump	-	-	-	-	-	GU19146422	1	
3	Roller bearing 10x22x20	-	-	-	-	-	GU92252210	1	
4	Oil pump shaft assy.	-	-	-	-	-	GU19147820	1	
5	Inner rotor	-	-	-	-	-	GU19148420	1	
7	Guide roller	-	-	-	-	-	GU92296726	1	
8	Ball	-	-	-	-	-	GU92295911	1	
9	Pressure sensor	-	-	-	02201N	-	GU31999581	1	
10	Plug	-	-	-	-	-	GU12159000	1	
11	Screw M6X35	-	-	-	-	-	GU98620335	3	
12	Pin	-	-	-	-	-	GU19018920	2	
13	Oil filter	-	-	-	-	-	GU19152200	1	
14	Screw	-	-	-	-	-	GU98054314	1	
15	Plate	-	-	-	-	-	GU95187006	1	
16	Oil filter	-	-	-	-	-	GU19153000	1	
17	Oil valve cpl.	-	-	-	-	-	GU10158201	1	
18	Valve body	-	-	-	-	-	GU10158701	1	
19	Piston	-	-	-	-	-	GU12150900	1	
20	Valve spring	-	-	-	-	-	GU94321072	1	
21	Bottom	-	-	-	-	-	GU12150700	1	
22	Washer 14,5X20X1	-	-	-	-	-	GU95100523	2	
23	Oil pump gear	-	-	-	-	-	GU19147721	1	
24	Washer 10,5x16x1	-	-	-	-	-	GU19149800	1	
25	Nut M10x1,25	-	-	-	-	-	GU92602510	1	

NTX 350 1987-1990	GU056	00	TAB N.	32
TRANSMISSION CAGE				

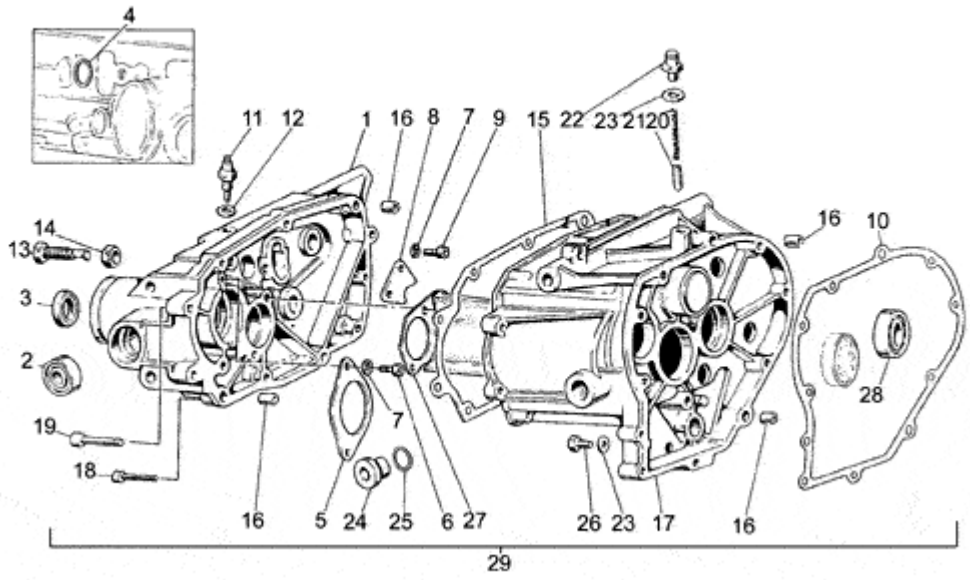

Pos.	Description	Year	I_M_	Country	Version	Code	Q.ty	P.Cod.
1	Box cover	-	-	-	- -	GU31200801	1	
2	Bearing 15x35x11	-	-	-	- -	GU92204215	2	
3	Gasket ring 28x40x7	-	-	-	- -	GU90402841	1	
4	O-ring 13,95x2,92	-	-	-	- -	GU90706140	1	
5	Plate	-	-	-	- -	GU19213820	1	
6	Screw	-	-	-	- -	GU98622314	4	
7	Washer 6,4x10x0,7	-	-	-	- -	GU14217901	6	
8	Plate	-	-	-	- -	GU19235800	1	
9	Screw	-	-	-	- -	GU98622314	2	
10	Gasket	-	-	-	- -	GU19200320	1	
11	Sensor	-	-	-	- -	GU19207220	1	
12	Gasket 8,25x15x1	-	-	-	- -	GU12154200	1	
13	Screw M12x1,25	-	-	-	- -	GU19237800	1	
14	Low nut M12x1,25	-	-	-	- -	GU92602512	1	
15	Gasket	-	-	-	- -	GU19201120	1	
16	Bush 6,6x9x13	-	-	-	- -	GU19002020	4	
17	Transmission cage	-	-	-	- -	GU31200201	1	
18	Screw M6x30	-	-	-	- -	GU98610330	7	
19	Screw	-	-	-	- -	GU98610435	4	
20	Pawl	-	-	-	- -	GU55234700	1	
21	Lever return spring	-	-	-	- -	GU94321067	1	
22	Breather plug	-	-	-	- -	GU31206500	1	
23	Gasket	-	-	-	- -	GU10528900	2	
24	Oil filler plug	-	-	-	- -	GU31351200	1	
25	O-ring 20,24X2,62	-	-	-	- -	GU90706203	1	
26	Oil plug	-	-	-	- -	GU95980213	1	
27	Oil bulhead	-	-	-	- -	GU19208220	1	
28	Ball bearing 20x42x12	-	-	-	- -	GU92201120	1	
29	Transmission assy and housing	-	-	-	- -	GU27991515	1	

PIAGGIO &C.s.p.a.

MOTO GUZZI

CATALOGUE DE PIÈCES DE RECHANGE



Nevada 350 1992-1993

Préfixe du cadre: ZGULG

Préfixe du moteur:

NEVADA

GU042

Index

Produits finis....3
Index alphanumérique....4
CHASSIS....10
Tableau 33.01 - Batterie....10
Tableau 33.02 - Kit valises-pare-brise....12
Tableau 33.03 - Carrosserie....13
Tableau 33.04 - Béquille....15
Tableau 33.05 - Couple conique....17
Tableau 33.06 - Tableau de bord....20
Tableau 33.07 - Phare avant-Klaxon....22
Tableau 33.08 - Feu arrière....23
Tableau 33.09 - Filtre air....24
Tableau 33.10 - Fourche Av....25
Tableau 33.11 - Fourche arriere....27
Tableau 33.12 - Circuit electrique....28
Tableau 33.13 - Guidon - Commandes....29
Tableau 33.14 - Garde-boue AV-AR....31
Tableau 33.15 - Repose-Pieds....33
Tableau 33.16 - Pince frein....34
Tableau 33.17 - Maît. cyl. frein AV....35
Tableau 33.18 - Pompe frein arrière....37
Tableau 33.19 - Roue Av....39
Tableau 33.20 - Roue arrière....40
Tableau 33.21 - Suspension avant/arriere....41
Tableau 33.22 - Chassis....42
Tableau 33.24 - Alimentation....44
Tableau 33.30 - Groupe echappement....45
Tableau 33.32 - Levier boîte de vitesses....47
MOTEUR....48
Tableau 34.23 - Arbre moteur....48
Tableau 34.25 - Boîte de vitesses....49
Tableau 34.26 - Carburateurs....51
Tableau 34.27 - Carter moteur....53
Tableau 34.28 - Distribution....55
Tableau 34.29 - Embrayage....56
Tableau 34.31 - Démarreur....58
Tableau 34.33 - Pompe huile....59
Tableau 34.34 - Carter de boîte vitesses....60
Tableau 34.35 - Tête cylindre....62

Produits finis

Code	Validité
aucun produit fini	

Code	N° de tableau	Pos.
0000000	34.26	16
0000000	34.26	23
0000000	34.26	29
0000000	34.26	33
0000000	34.26	34
0000000	34.26	39
0000000	34.26	40
0000000	34.26	9
GU00823923140	33.09	25
GU00823931070	33.14	40
GU00823932085	33.03	3
GU00823944050	33.09	4
GU00823950050	33.18	24
GU00823956080	33.03	10
GU04000500	34.27	13
GU10054100	34.25	12
GU10054100	34.25	42
GU10154200	34.27	39
GU10214301	34.25	27
GU10214302	34.25	27
GU10214303	34.25	27
GU10214304	34.25	27
GU10214305	34.25	27
GU10528900	33.05	11
GU10528900	33.05	9
GU10528900	34.27	22
GU10528900	34.34	23
GU10934900	34.26	38
GU12003702	34.27	30
GU12022600	33.05	6
GU12022600	34.34	24
GU12087001	34.29	10
GU12154200	33.09	24
GU12154200	34.27	33
GU12154200	34.34	12
GU12434001	33.04	5
GU12717600	33.13	31
GU12937200	34.26	10
GU13021900	34.27	36
GU13021900	34.35	12
GU13432640	33.04	4
GU13933100	34.26	42
GU13934700	34.26	37
GU13936200	34.26	26
GU13936300	34.26	27
GU13936600	34.26	30
GU13936700	34.26	31
GU13937800	34.26	25
GU13937900	34.26	21
GU14086000	34.29	9
GU14086100	34.29	11
GU14090201	34.29	13
GU14090400	34.29	14
GU14217901	34.29	31
GU14217901	34.29	6
GU14217901	34.34	7
GU14251001	33.18	2
GU14251001	33.32	2
GU14423800	33.04	12
GU14494600	33.21	3
GU14516700	33.21	4
GU14517000	33.21	5
GU14547800	33.11	14
GU14609650	33.01	20
GU14609650	33.09	5
GU14609650	33.12	17
GU14609650	33.22	12
GU14609650	33.24	17
GU14615901	33.10	39
GU14615901	33.11	20
GU14615901	33.15	3
GU14615901	33.19	12
GU14615901	33.30	18
GU14615901	34.23	18
GU14634400	33.20	11
GU14707000	33.01	2
GU14717400	33.01	6
GU14717600	33.01	5
GU14756255	33.07	5
GU14769200	33.06	34
GU14769470	33.13	24
GU14769870	33.13	23
GU14931650	34.26	32
GU14934650	34.26	11
GU17113450	33.09	12
GU17113651	33.09	13
GU17114050	33.09	14
GU17114650	33.09	3
GU17252050	33.32	13
GU17434060	33.04	14
GU17659352	33.18	30
GU17661052	33.18	23
GU17740405	33.07	11
GU17750520	33.12	14
GU17765560	33.06	10
GU17937450	34.26	22
GU18144350	34.33	16
GU18161150	34.33	21
GU18257551	33.18	7
GU18257950	33.32	22
GU18513460	33.10	6
GU18513560	33.10	2
GU18516660	33.10	10
GU18577850	33.02	6
GU18740435	33.07	3
GU18759550	33.12	12
GU19001200	34.27	15
GU19001460	34.27	14
GU19002020	34.27	9
GU19002020	34.34	16
GU19003400	34.27	26
GU19003602	34.27	20
GU19003800	34.27	8
GU19007700	34.27	17
GU19015020	34.27	5
GU19016320	34.27	10
GU19017000	33.04	31
GU19018920	34.33	10
GU19021320	34.35	18
GU19021920	34.35	7
GU19023700	34.35	10
GU19025280	33.30	5
GU19025300	34.35	6
GU19025460	33.30	6
GU19027500	34.28	15
GU19030500	34.28	7
GU19032000	34.28	10
GU19032300	34.28	11
GU19032980	34.28	14
GU19032980	34.35	26
GU19034000	34.28	8
GU19036021	34.28	1
GU19037820	34.35	8
GU19045020	34.28	26
GU19045861	34.28	25
GU19054521	34.28	17
GU19055700	34.28	23
GU19058021	34.28	19
GU19058220	34.28	20
GU19060700	34.23	11
GU19061000	34.23	12
GU19061220	34.23	5
GU19061320	34.23	14
GU19061521	34.23	3
GU19061821	34.23	16
GU19062022	34.23	6
GU19062221	34.23	4
GU19064121	34.23	1
GU19065400	34.23	2
GU19065623	34.23	7
GU19066522	34.23	8
GU19067700	34.23	17
GU19067900	34.29	5
GU19080161	34.29	1
GU19083462	34.29	2
GU19102750	33.03	12
GU19113900	33.09	8
GU19114300	33.09	1
GU19114480	33.24	13
GU19114680	33.24	12
GU19115520	33.24	5
GU19121050	33.30	7
GU19146420	34.33	1
GU19147721	34.33	17
GU19147820	34.33	4
GU19148420	34.33	5
GU19149800	34.33	18
GU19152200	34.33	11
GU19156001	33.09	11
GU19156701	33.09	7
GU19156900	33.09	10
GU19157800	33.18	25
GU19200462	34.29	26
GU19201120	34.34	15
GU19202320	34.34	29
GU19203460	34.29	29
GU19206501	33.05	10
GU19206501	34.34	22
GU19207220	34.34	11
GU19208220	34.34	27
GU19211120	34.25	41
GU19211361	34.25	8
GU19211460	34.25	6
GU19211861	34.25	5
GU19212900	34.25	15
GU19213661	34.25	14
GU19213720	34.25	17
GU19213760	34.29	22
GU19214660	34.25	11
GU19214860	34.25	21
GU19215161	34.25	22
GU19215460	34.25	3
GU19218061	34.25	25
GU19218062	34.25	9
GU19231020	34.25	35
GU19231220	34.25	34
GU19234420	34.25	30
GU19234600	34.25	31
GU19235800	34.34	8
GU19237800	34.34	13
GU19258220	33.32	19

Code	N° de tableau	Pos.
GU19327601	33.11	5
GU19327701	33.11	2
GU19328801	33.11	3
GU19350700	33.05	22
GU19351100	33.05	4
GU19351401	33.05	16
GU19351900	33.05	2
GU19352300	33.05	23
GU19352401	33.05	31
GU19353500	33.05	24
GU19354621	33.05	18
GU19355121	33.05	34
GU19355200	33.05	35
GU19355202	33.05	36
GU19355300	33.05	33
GU19355300	34.25	32
GU19355301	33.05	33
GU19355302	33.05	33
GU19355303	33.05	33
GU19355304	33.05	33
GU19355305	33.05	33
GU19355306	33.05	33
GU19355307	33.05	33
GU19355308	33.05	33
GU19355309	33.05	33
GU19355320	33.05	40
GU19355321	33.05	40
GU19355322	33.05	40
GU19355323	33.05	40
GU19355324	33.05	40
GU19355325	33.05	40
GU19355326	33.05	40
GU19355327	33.05	40
GU19355328	33.05	40
GU19355329	33.05	40
GU19355400	33.05	21
GU19355402	33.05	21
GU19355404	33.05	21
GU19355406	33.05	21
GU19355408	33.05	21
GU19355410	33.05	21
GU19355411	33.05	21
GU19355412	33.05	21
GU19355413	33.05	21
GU19356320	33.05	19
GU19356700	33.05	30
GU19356760	34.29	24
GU19356801	33.05	28
GU19357660	33.05	25
GU19461650	33.22	3
GU19529660	33.10	29
GU19547000	33.11	12
GU19632501	33.20	4
GU19632502	33.20	5
GU19659500	33.18	28
GU19659600	33.18	29
GU19667500	33.18	14
GU19667600	33.18	15
GU19668000	33.16	16
GU19705900	33.14	10
GU19707100	33.01	22
GU19718000	33.24	14
GU19740302	33.07	14
GU19740303	33.07	10
GU19740404	33.07	7
GU19740454	33.07	2
GU19741336	33.06	36

Code	N° de tableau	Pos.
GU19748400	33.01	23
GU19762810	33.06	35
GU19768680	33.06	17
GU19782520	33.22	2
GU19934480	34.26	41
GU19934600	34.26	7
GU19935080	34.26	12
GU19935750	34.26	4
GU19936000	34.26	6
GU19938580	34.26	14
GU19939980	34.26	19
GU19999021	34.27	35
GU19999580	34.27	34
GU20085720	34.29	8
GU20208520	34.25	40
GU20527620	33.10	14
GU20999520	34.25	38
GU23036100	34.28	2
GU23200370	34.34	10
GU23202074	34.25	28
GU23210570	34.25	1
GU23212070	34.25	2
GU23213870	34.34	5
GU23214071	34.25	24
GU23214571	34.25	20
GU23215270	34.25	23
GU23217800	34.28	28
GU23328081	33.11	7
GU23430370	33.04	3
GU23440710	33.04	18
GU23441110	33.04	20
GU23441210	33.04	21
GU23441810	33.04	19
GU23442210	33.04	30
GU23443210	33.04	24
GU23443510	33.15	2
GU23446010	33.15	1
GU234762101	33.03	16
GU23494070	33.10	1
GU23496170	33.10	33
GU23496270	33.10	34
GU23497910	33.10	44
GU23500210	33.10	41
GU23505810	33.21	19
GU23525470	33.10	17
GU23526370	33.10	45
GU23526470	33.10	19
GU23526610	33.10	20
GU23526910	33.10	22
GU23527910	33.10	37
GU23548080	33.11	8
GU23548180	33.11	9
GU23555280	33.21	10
GU23555281	33.21	7
GU23630370	33.20	1
GU23631170	33.20	14
GU23631470	33.20	13
GU23653011	33.16	1
GU23655770	33.17	28
GU23707100	33.01	12
GU23721493	33.12	9
GU23740418	33.07	6
GU23751310	33.21	20
GU23760010	33.06	1
GU23761910	33.06	5
GU23762010	33.06	6
GU23764110	33.06	19

Code	N° de tableau	Pos.
GU23764910	33.06	9
GU23765110	33.06	8
GU23766510	33.06	13
GU23766910	33.06	32
GU23768110	33.06	14
GU23768310	33.06	3
GU23922210	33.21	21
GU23935910	34.26	5
GU23943410	33.10	42
GU23943410	33.15	21
GU23943410	33.30	22
GU25656100	33.16	8
GU25656100	33.17	19
GU27001136	34.27	25
GU27001636	34.27	24
GU27003585	34.27	19
GU27004985	34.27	28
GU27020820	34.35	24
GU27022020	34.35	19
GU27037521	34.28	4
GU27045420	34.28	27
GU27053463	34.28	16
GU27060820	34.23	13
GU27084460	34.29	4
GU27114120	33.09	15
GU27117515	33.13	9
GU27117615	33.13	10
GU27117775	33.13	12
GU27132815	33.13	22
GU27133515	33.13	26
GU27152885	34.27	32
GU27153085	34.33	14
GU27153460	33.09	18
GU27159360	33.09	22
GU27159660	33.09	19
GU27350410	33.05	13
GU27356910	33.20	9
GU27357411	33.05	41
GU27418210	33.22	7
GU274344201	33.14	1
GU27436920	33.14	2
GU27499120	33.10	32
GU27601015	33.13	16
GU27601215	33.13	15
GU27601815	33.13	17
GU27603400	33.13	2
GU27603715	33.13	11
GU27603815	33.13	5
GU27604415	33.13	4
GU27604515	33.13	6
GU27604815	33.17	5
GU27616110	33.19	3
GU27616110	33.20	16
GU27616111	33.19	3
GU27616111	33.20	16
GU27616112	33.19	3
GU27616112	33.20	16
GU27616113	33.19	3
GU27616113	33.20	16
GU27631250	33.20	15
GU27633910	33.20	8
GU27634110	33.05	39
GU27635811	33.16	3
GU27654610	33.17	18
GU27659415	33.13	19
GU27661115	33.17	10
GU27663615	33.17	6

Code	N° de tableau	Pos.
GU27663815	33.13	21
GU27664075	33.17	4
GU27710435	33.12	11
GU27721063	33.01	29
GU27723835	33.12	10
GU27738015	33.13	25
GU27749815	33.17	7
GU27760410	33.06	12
GU27933720	34.26	18
GU27934315	34.26	8
GU27934820	34.26	1
GU27935521	34.26	3
GU28109040	33.22	13
GU28157950	33.03	11
GU28238261	34.25	39
GU28252060	33.04	36
GU28256960	33.32	5
GU28258160	33.32	9
GU28432760	33.04	37
GU28436460	33.14	42
GU28526540	33.10	31
GU28527540	33.10	21
GU28556250	33.10	26
GU28556350	33.10	28
GU28556450	33.10	25
GU28605678	33.17	3
GU28613300	33.19	9
GU28657500	33.16	6
GU28659378	33.17	11
GU28660178	33.17	1
GU28660278	33.17	2
GU28703800	33.01	18
GU28712400	33.01	17
GU28712459	33.01	14
GU28712500	33.01	11
GU28732560	33.12	15
GU28740533	33.07	1
GU28742560	33.12	6
GU28743760	33.07	18
GU28743761	33.07	17
GU28745761	33.06	28
GU28747960	33.01	13
GU28766933	33.06	20
GU28769533	33.21	22
GU28929940	33.14	34
GU29105750	33.03	7
GU29436450	33.15	5
GU29579460	33.14	43
GU29600351	33.13	1
GU29602760	33.13	28
GU29606970	33.13	30
GU29722270	33.01	26
GU29725850	33.12	4
GU29748550	33.12	7
GU29750662	33.08	5
GU29750663	33.08	6
GU29751660	33.07	13
GU29753760	33.07	16
GU29753760	33.08	8
GU29759150	33.04	41
GU29765250	33.06	15
GU30103960	33.03	2
GU30157430	33.09	23
GU30464310	33.22	22
GU30530510	34.31	3
GU30530511	34.31	4
GU30530512	34.31	9

Code	N° de tableau	Pos.
GU30602500	33.13	18
GU30605530	33.13	13
GU30607910	33.13	7
GU30730711	34.31	1
GU30732510	33.12	13
GU30743000	33.12	5
GU30920810	33.22	23
GU31000380	34.27	1
GU31003766	33.05	8
GU31003766	34.27	21
GU31003766	34.34	26
GU31016050	34.33	20
GU31022180	34.35	1
GU31022280	34.35	2
GU31023500	34.35	9
GU31037015	34.28	13
GU31038015	34.28	5
GU31060181	34.35	17
GU31060480	34.23	10
GU31060680	34.23	15
GU31066480	34.23	9
GU31093061	33.13	20
GU311002601	33.03	1
GU31100281	33.03	1
GU31100282	33.03	1
GU31105360	33.03	6
GU31105460	33.03	9
GU31112680	33.24	1
GU31112681	33.24	2
GU31114380	33.24	10
GU31115080	33.24	3
GU31115081	33.24	4
GU31120780	33.30	1
GU31120781	33.30	2
GU31120782	33.30	1
GU31120783	33.30	2
GU31122960	33.30	10
GU31123060	33.30	11
GU31123460	33.30	12
GU31123980	33.30	3
GU31126960	33.30	4
GU31128660	33.30	13
GU31128760	33.30	14
GU31155780	33.09	6
GU31158250	34.33	15
GU31200280	34.34	17
GU31200880	34.34	1
GU31210780	34.29	20
GU31250960	33.32	1
GU31252360	33.32	14
GU31256960	33.32	12
GU31257880	33.32	8
GU31350280	33.11	1
GU31350380	33.05	1
GU31400160	33.22	1
GU31420380	33.04	1
GU31422180	33.04	2
GU31432160	33.04	11
GU31434381	33.14	1
GU31434382	33.14	1
GU31436415	33.14	5
GU314370801	33.14	11
GU31437081	33.14	11
GU31437082	33.14	11
GU31438060	33.14	16
GU31439160	33.14	12
GU31441260	33.15	18

Code	N° de tableau	Pos.
GU31457860	33.14	13
GU31459160	33.14	14
GU31460561	33.03	13
GU31476266	33.03	16
GU31476282	33.03	16
GU314763621	33.03	17
GU31476366	33.03	17
GU31476384	33.03	17
GU31479430	33.22	18
GU31479560	33.14	7
GU31479630	33.22	17
GU31479760	33.14	8
GU31486660	33.02	2
GU31486760	33.02	3
GU31490280	33.21	1
GU31493140	33.10	7
GU31522565	33.10	11
GU31522665	33.10	12
GU31524550	33.10	18
GU31540280	33.11	11
GU31544160	33.11	23
GU31570360	33.03	22
GU31575161	33.02	4
GU31575360	33.03	24
GU31575460	33.03	25
GU31575560	33.14	15
GU31576660	33.03	23
GU31576760	33.03	20
GU31603060	33.13	27
GU31603560	33.13	8
GU31610360	33.19	1
GU31613335	33.20	2
GU31614160	33.19	14
GU31615260	33.19	5
GU31616360	33.19	15
GU31620360	33.19	4
GU31626860	33.18	9
GU31626880	33.32	11
GU31633330	33.20	10
GU31634130	33.16	5
GU31634230	33.16	4
GU31652265	33.17	15
GU31652365	33.17	16
GU31654660	33.16	2
GU31654665	33.16	18
GU31654765	33.16	17
GU31656860	33.17	14
GU31657160	33.17	13
GU31659160	33.16	12
GU31659165	33.16	24
GU31659260	33.16	13
GU31659265	33.16	23
GU31659760	33.14	6
GU31666990	33.18	13
GU31675280	33.18	6
GU31677060	33.18	1
GU31704560	33.01	1
GU31704860	33.01	4
GU31705360	33.01	3
GU31716560	33.01	7
GU31717060	33.01	10
GU31722140	33.12	8
GU31724540	33.12	16
GU31735360	33.06	37
GU31740960	33.08	1
GU31741260	33.08	4
GU31741760	33.08	2

Code	N° de tableau	Pos.
GU31744560	33.07	23
GU31745860	33.14	18
GU31747160	33.12	1
GU31747260	33.12	2
GU31747360	33.12	3
GU31749760	33.22	30
GU31759360	33.04	38
GU31761560	33.06	2
GU31762561	33.06	38
GU31762562	33.06	38
GU31767260	33.06	4
GU31900060	33.14	33
GU31900061	33.14	33
GU31917365	33.03	5
GU31922080	33.03	18
GU31934460	34.26	41
GU31934680	34.26	36
GU31937780	34.26	2
GU31940480	33.03	35
GU31940580	33.03	34
GU31991080	34.27	41
GU31991580	34.34	30
GU31999260	33.02	1
GU31999262	33.21	6
GU31999266	33.03	19
GU31999581	34.33	8
GU35214300	33.11	13
GU35755780	33.06	29
GU39103400	33.22	11
GU39238100	34.25	43
GU39474600	33.14	17
GU39611601	33.19	2
GU39654700	33.17	17
GU39659000	33.17	25
GU39659100	33.17	24
GU39663801	33.17	30
GU39937600	34.26	24
GU43934000	34.26	35
GU51609800	33.15	16
GU53429500	33.04	32
GU55234700	34.34	20
GU61013800	33.06	33
GU61013800	33.24	9
GU61013800	33.30	8
GU61013800	33.32	20
GU61027200	34.35	23
GU61036801	34.35	3
GU61038100	34.28	6
GU61054900	34.28	18
GU61108400	33.09	21
GU61127220	33.30	21
GU61127520	33.30	20
GU61238200	34.25	39
GU61270300	33.04	26
GU61270300	33.05	26
GU61270300	33.15	8
GU61270300	33.16	10
GU61270300	33.17	21
GU61270300	33.30	15
GU61270300	34.27	6
GU61270300	34.29	35
GU61270300	34.35	21
GU61609630	33.09	26
GU63657000	33.16	17
GU65659200	33.17	23
GU65663500	33.18	21
GU65933600	34.26	15
GU65933700	34.26	28
GU66440630	33.15	12
GU66440730	33.15	13
GU66441630	33.15	15
GU66441730	33.15	6
GU66441830	33.15	14
GU66443230	33.15	17
GU66466815	33.22	25
GU66468115	33.22	26
GU66659031	33.16	25
GU90271008	33.18	22
GU90271018	34.28	12
GU90271020	34.25	33
GU90271117	34.25	29
GU90271121	34.25	19
GU90271127	34.25	4
GU90272023	33.11	4
GU90272075	34.29	3
GU90280005	33.22	20
GU90280006	33.15	11
GU90353009	34.35	4
GU90353029	34.28	24
GU90353030	33.05	17
GU90400616	34.29	21
GU90401530	34.27	11
GU90402840	34.27	18
GU90402841	34.34	3
GU90403245	34.29	19
GU90403247	33.05	38
GU90403547	33.05	3
GU90403857	33.10	13
GU90405367	34.27	13
GU90407590	33.05	15
GU90706035	33.14	22
GU90706076	33.05	42
GU90706076	34.35	25
GU90706092	33.14	4
GU90706094	33.10	36
GU90706111	34.33	22
GU90706140	34.34	4
GU90706141	33.18	27
GU90706141	33.32	4
GU90706170	34.29	12
GU90706188	33.05	29
GU90706188	34.25	18
GU90706203	33.05	7
GU90706203	34.34	25
GU90706235	34.29	23
GU90706282	33.10	27
GU90706282	34.27	29
GU90706444	34.27	27
GU90706552	33.05	37
GU90706552	33.09	9
GU91180602	33.04	34
GU91180605	33.03	31
GU91180605	33.07	22
GU91180605	33.18	31
GU91180607	33.06	26
GU91180721	33.01	9
GU91180804	33.21	17
GU91181016	33.10	5
GU91181114	33.04	7
GU91181407	33.21	18
GU91182010	34.25	40
GU91551085	33.06	25
GU91551085	33.14	9
GU91551085	33.22	10
GU91551120	33.17	29
GU92201070	33.05	14
GU92201120	34.34	28
GU92201220	34.25	16
GU92201225	34.29	28
GU92204215	34.34	2
GU92204217	33.20	7
GU92204218	33.20	6
GU92204221	33.19	6
GU92218417	34.25	10
GU92230320	34.25	13
GU92234716	34.25	26
GU92249220	33.05	32
GU92249223	33.05	20
GU92249225	33.21	2
GU92251023	34.25	7
GU92252210	34.33	3
GU92252235	33.05	5
GU92295708	33.17	9
GU92296726	34.33	7
GU92297909	34.25	36
GU92602205	33.22	29
GU92602206	33.04	29
GU92602206	33.18	20
GU92602206	33.32	10
GU92602208	33.16	14
GU92602208	34.27	7
GU92602208	34.29	25
GU92602208	34.31	12
GU92602210	33.04	16
GU92602210	33.11	18
GU92602210	33.22	6
GU92602308	33.10	38
GU92602316	33.20	12
GU92602406	34.28	9
GU92602411	33.21	13
GU92602508	33.04	33
GU92602508	34.29	15
GU92602510	34.33	19
GU92602512	33.08	9
GU92602512	34.34	14
GU92602516	33.19	8
GU92603010	34.35	11
GU92608202	33.17	26
GU92630105	33.12	20
GU92630105	33.14	20
GU92630106	33.03	15
GU92630106	33.06	27
GU92630106	33.08	11
GU92630106	33.14	36
GU92630106	33.32	21
GU92630108	33.22	24
GU92630206	33.14	31
GU92630508	33.15	9
GU92630508	33.19	13
GU92630508	33.32	18
GU92630510	33.04	10
GU92660008	33.30	19
GU92660601	33.03	28
GU92660601	33.07	21
GU92660601	33.14	32
GU92670305	33.09	17
GU92690073	33.18	8
GU92701062	33.30	9
GU92781062	33.14	39
GU92781081	33.11	19
GU92781081	33.21	14

Code	N° de tableau	Pos.
GU92781081	33.30	16
GU92781100	33.10	30
GU93110060	33.01	16
GU93110060	33.02	8
GU93110060	33.06	30
GU93110060	33.08	13
GU93110060	33.14	29
GU93110082	33.03	33
GU93180105	33.11	21
GU93180111	33.10	43
GU93180206	33.15	20
GU93180220	34.29	27
GU93180245	34.35	22
GU93301175	33.14	25
GU93301313	33.16	15
GU93305018	33.09	20
GU93305032	33.24	11
GU93305074	33.11	10
GU93305092	33.09	2
GU93450119	33.07	12
GU93450120	33.06	11
GU93450127	33.07	15
GU93450127	33.08	7
GU93450140	33.06	18
GU93450224	33.08	3
GU93450232	33.07	4
GU94321067	34.34	21
GU94321099	33.11	6
GU94321105	34.29	16
GU94322215	33.04	8
GU95000205	33.01	25
GU95000205	33.14	23
GU95000206	33.08	12
GU95000206	33.14	28
GU95000206	33.16	11
GU95000206	33.18	18
GU95000208	33.04	25
GU95000210	33.04	9
GU95001206	33.03	27
GU95001206	33.07	20
GU95004205	33.06	22
GU95004205	33.24	15
GU95004206	33.03	30
GU95004206	33.06	24
GU95004206	33.17	32
GU95004206	33.18	16
GU95004206	34.33	23
GU95004208	33.11	22
GU95004208	33.21	15
GU95004208	33.22	9
GU95004208	34.31	11
GU95004210	33.04	28
GU95004210	33.11	17
GU95004210	33.22	15
GU95004215	33.18	4
GU95004217	33.19	7
GU95007210	33.07	8
GU95007210	33.10	4
GU95021105	33.01	15
GU95021105	33.22	28
GU95021106	33.17	33
GU95021106	33.18	19
GU95021106	33.32	7
GU95021108	33.15	7
GU95021108	33.32	24
GU95021110	33.21	12
GU95021112	33.08	10
GU95100059	33.09	16
GU95100059	33.12	19
GU95100059	33.22	27
GU95100060	33.06	39
GU95100116	33.10	16
GU95100116	33.24	7
GU95100120	33.14	30
GU95100139	33.01	19
GU95100141	33.03	14
GU95100141	33.14	26
GU95100141	33.14	37
GU95100144	33.02	7
GU95100239	33.21	8
GU95100250	33.17	22
GU95100251	33.17	22
GU95100523	33.11	24
GU95100709	34.27	31
GU95120105	33.22	5
GU95129110	33.18	11
GU95129110	33.32	16
GU95129115	34.28	22
GU95129130	33.04	35
GU95129180	33.21	11
GU95129180	34.27	38
GU95129180	34.35	13
GU95129260	33.18	3
GU95129260	33.32	3
GU95187006	34.33	13
GU95401215	33.04	15
GU95401218	33.22	19
GU95500222	33.11	25
GU95500222	33.18	12
GU95500222	33.32	17
GU95500222	34.29	18
GU95500227	33.18	5
GU95520316	34.25	37
GU95770265	33.18	10
GU95770265	33.32	15
GU95780271	34.29	17
GU95980119	34.27	40
GU95990028	33.16	7
GU95990028	33.17	12
GU96451430	34.27	3
GU96451560	34.27	2
GU96506040	33.32	23
GU96506042	34.35	5
GU96508032	33.21	16
GU96508055	33.05	12
GU96508055	34.27	4
GU96508107	34.35	20
GU96510125	34.35	15
GU96510182	34.35	14
GU98052325	33.32	6
GU98052330	33.18	17
GU98052435	34.31	10
GU98052470	33.19	11
GU98052535	33.04	40
GU98052555	33.22	16
GU98052565	33.04	27
GU98054210	33.22	31
GU98054212	33.14	21
GU98054220	33.24	16
GU98054225	33.06	21
GU98054230	33.06	31
GU98054312	33.14	24
GU98054314	33.04	23
GU98054314	34.29	30
GU98054314	34.33	12
GU98054316	33.01	21
GU98054316	33.14	38
GU98054316	33.18	26
GU98054316	34.29	7
GU98054318	33.14	41
GU98054320	33.06	23
GU98054320	33.14	27
GU98054322	33.04	17
GU98054325	33.14	35
GU98054330	33.17	31
GU98054418	33.22	8
GU98054530	33.04	6
GU98072555	33.10	3
GU98110199	33.22	14
GU98200214	33.17	8
GU98200306	33.03	8
GU98202516	33.12	18
GU98230620	33.03	26
GU98230620	33.07	19
GU98230621	33.03	29
GU98230825	33.19	10
GU98230825	33.20	3
GU98230845	33.14	3
GU98231022	33.07	9
GU98250835	33.15	10
GU98270621	33.02	5
GU98290512	33.01	24
GU98304014	33.15	19
GU98310610	33.24	6
GU98610230	33.22	21
GU98610540	33.10	8
GU98612110	33.04	39
GU98612320	33.07	24
GU98612425	33.16	9
GU98612535	33.10	9
GU98620240	33.01	8
GU98620250	33.01	28
GU98620330	34.27	37
GU98620330	34.29	32
GU98620330	34.34	18
GU98620335	34.27	23
GU98620335	34.33	9
GU98620435	33.10	40
GU98620435	34.29	33
GU98620435	34.34	19
GU98620450	34.29	34
GU98620545	33.11	16
GU98622214	33.06	7
GU98622216	33.14	19
GU98622310	33.16	18
GU98622314	34.34	6
GU98622314	34.34	9
GU98622318	33.01	27
GU98622320	33.10	15
GU98622325	34.27	16
GU98622325	34.35	16
GU98622416	33.15	4
GU98622420	33.30	17
GU98622422	33.17	20
GU98622425	33.10	35
GU98622425	33.17	27
GU98622525	33.22	4
GU98622530	33.10	24
GU98622545	33.10	23
GU98812416	33.21	9
GU98822316	34.28	21

Code	N° de tableau	Pos.
GU98822325	33.24	8
GU99105129	33.04	13
GU99210210	33.03	21
GU99210210	33.06	16

Groupe	CHASSIS
Code	33.01
Description	Batterie
Révision	1

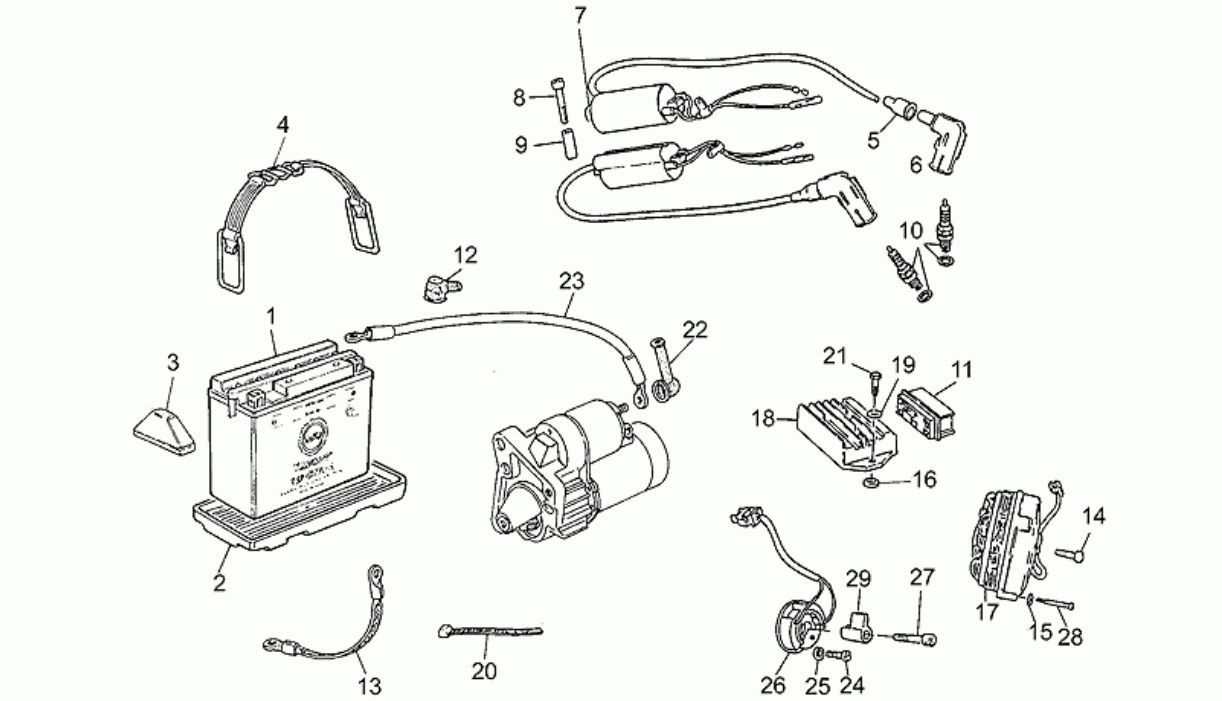

Pos.	Code	Description	Quant	Variants
1	GU31704560	Batterie Y50-N18L-A	1	**Spécifications techniques:**YU MICRON Y50-N18L-A 12V-20AH[M]
2	GU14707000	Cuve	1	
3	GU31705360	Cône fixation accumulateur	1	
4	GU31704860	Bride	1	
5	GU14717600	Capuchon	2	
6	GU14717400	Pipe bougie	2	
7	GU31716560	Bobine HT	2	
8	GU98620240	Vis	4	
9	GU91180721	Entretoise	4	
10	GU31717060	Bougie NGK B8ES	2	
11	GU28712500	Connecteur SAPRISA	1	**Spécifications techniques:**Saprisa[S]
12	GU23707100	Capuchon	1	
13	GU28747960	Câblage masse-batterie	1	
14	GU28712459	Vis	1	
15	GU95021105	Rondelle évent.	3	
16	GU93110060	Caoutchouc	4	
17	GU28712400	Alternateur SAPRISA	1	**Spécifications techniques:**Saprisa[S]
18	GU28703800	Régulateur de tension SAPRISA	1	**Spécifications techniques:**Saprisa[S]
19	GU95100139	Rondelle 6,5X17X1.5	2	
20	GU14609650	Collier 3,6x20,6	20	
21	GU98054316	Vis	2	
22	GU19707100	Capuchon	2	
23	GU19748400	Câblage masse-batterie	1	
24	GU98290512	Vis	2	
25	GU95000205	Rondelle	2	
26	GU29722270	Capteur phase/tours	1	
27	GU98622318	Vis	1	

Groupe	CHASSIS
Code	33.01
Description	Batterie
Révision	1

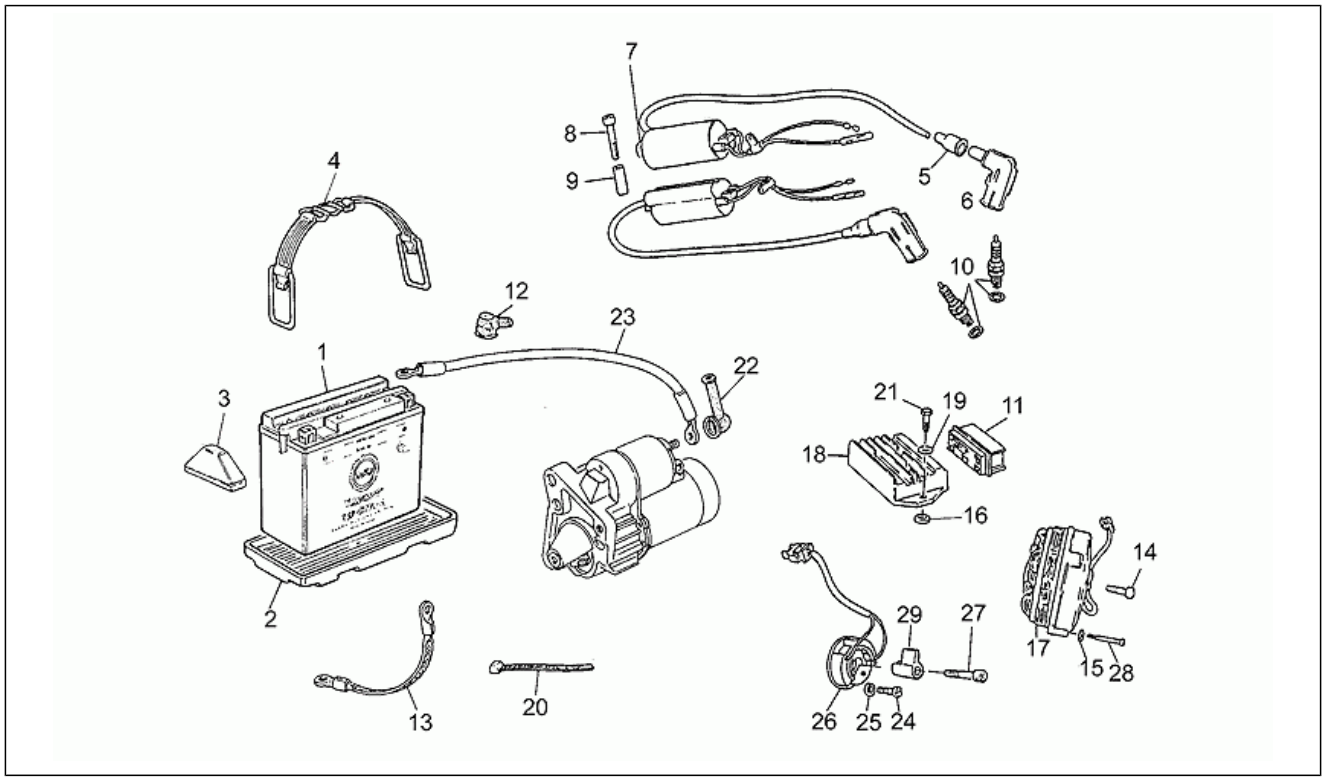

Pos.	Code	Description	Quant	Variants
28	GU98620250	Vis	3	
29	GU27721063	Rotor	1	

Groupe	CHASSIS
Code	33.02
Description	Kit valises-pare-brise
Révision	1

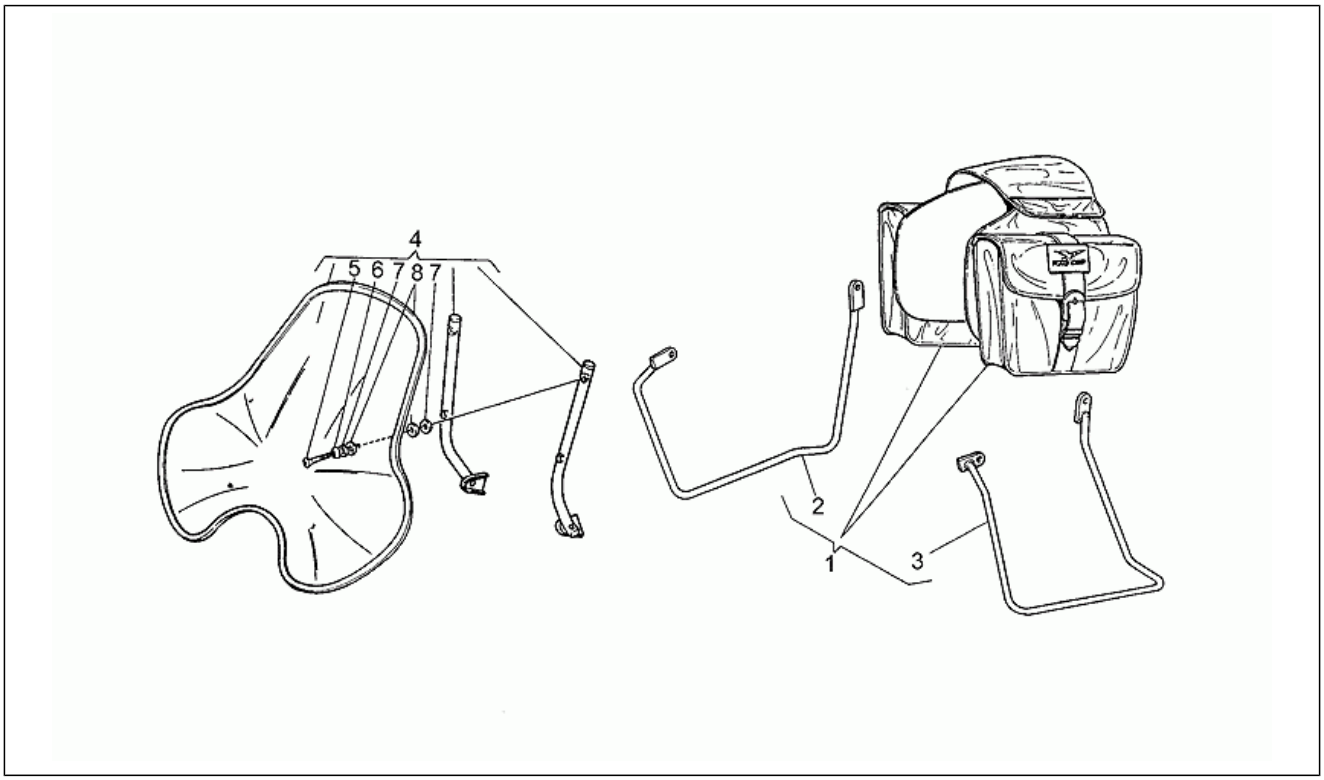

Pos.	Code	Description	Quant	Variants
1	GU31999260	Sacs latéraux - paire	1	
2	GU31486660	Support droite	1	
3	GU31486760	Support gauche	1	
4	GU31575161	Pare-brise cpl.	1	
5	GU98270621	Vis	4	
6	GU18577850	Rondelle	4	
7	GU95100144	Rondelle plate	8	
8	GU93110060	Caoutchouc	8	

Groupe	CHASSIS
Code	33.03
Description	Carrosserie
Révision	1

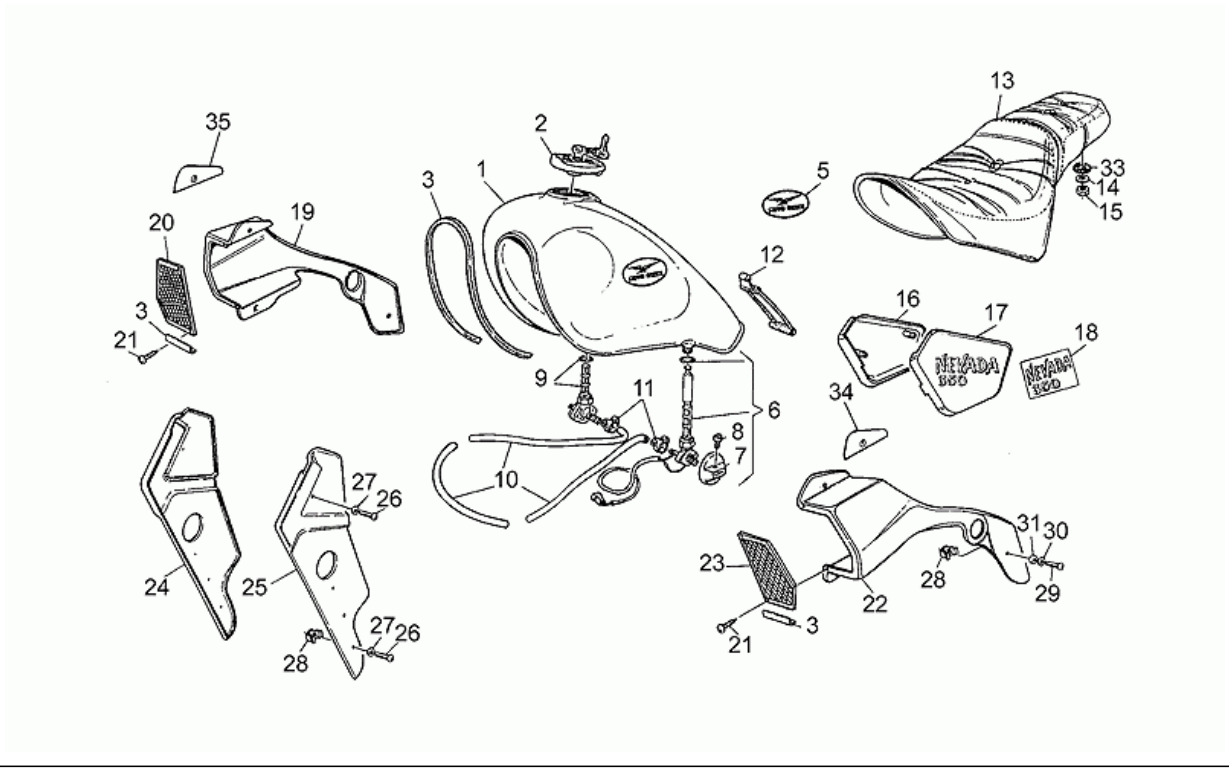

Pos.	Code	Description	Quant	Variants
1	GU311002601	Reservoir carburant	1	**Couleur véhicule:**Brut[gr]
1	GU31100281	Reservoir carburant	1	**Couleur véhicule:** Noir[b]
1	GU31100282	Reservoir carburant	1	**Couleur véhicule:** Blanc[w]
2	GU30103960	Bouchon réservoir essence	1	
3	GU00823932085	Joint	1	
5	GU31917365	Décalco "Moto Guzzi"	2	
6	GU31105360	Robinet ess. d.	1	
7	GU29105750	Poignée	2	
8	GU98200306	Vis	2	
9	GU31105460	Robinet ess. g.	1	
10	GU00823956080	Tuyau caoutchouc 12,5X7,8 5/16"	1	
11	GU28157950	Collier clic 12,5x8	4	
12	GU19102750	Tirant	1	
13	GU31460561	Selle	1	
14	GU95100141	Rondelle 6,4x12x1,2	2	
15	GU92630106	Ecrou M6x1	2	
16	GU234762101	Recouvrement d.brut	1	**Couleur véhicule:**Brut[gr]
16	GU31476266	Aile D	1	**Couleur véhicule:** Noir[b]
16	GU31476282	Aile D	1	**Couleur véhicule:** Blanc[w]
17	GU314763621	Recouvrement g.brut	1	**Couleur véhicule:**Brut[gr]
17	GU31476366	Aile G	1	**Couleur véhicule:** Noir[b]
17	GU31476384	Aile G	1	**Couleur véhicule:** Blanc[w]
18	GU31922080	Décalco "Nevada 350"	2	**Spécifications techniques:**Sky blue/grey decal[D1]
19	GU31999266	Aile D cromo	1	
20	GU31576760	Grille droite	1	
21	GU99210210	Vis taraud	8	
22	GU31570360	Aile G cromo	1	
23	GU31576660	Grille gauche	1	

Groupe	CHASSIS
Code	33.03
Description	Carrosserie
Révision	1

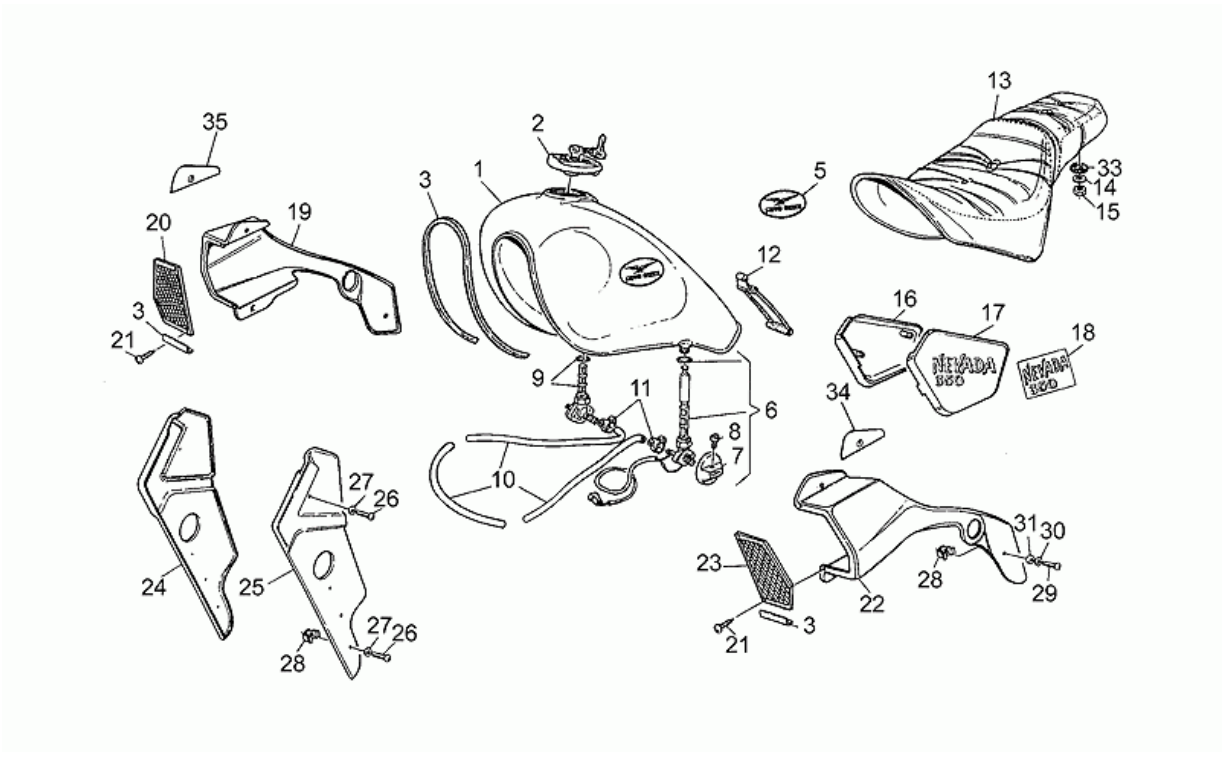

Pos.	Code	Description	Quant	Variants
24	GU31575360	Flanc AV D	1	
25	GU31575460	Flanc AV G	1	
26	GU98230620	Vis	6	
27	GU95001206	Rondelle	6	
28	GU92660601	Ecrou en cage	6	
29	GU98230621	Vis	6	
30	GU95004206	Rondelle 6,15x11x0,8	6	
31	GU91180605	Entretoise	2	
33	GU93110082	Caoutchouc	2	
34	GU31940580	Décalco flanc G	2	**Spécifications techniques:**Déc.noir[D2]
35	GU31940480	Décalco flanc D	2	**Spécifications techniques:**Déc.noir[D2]

Groupe	CHASSIS
Code	33.04
Description	Béquille
Révision	1

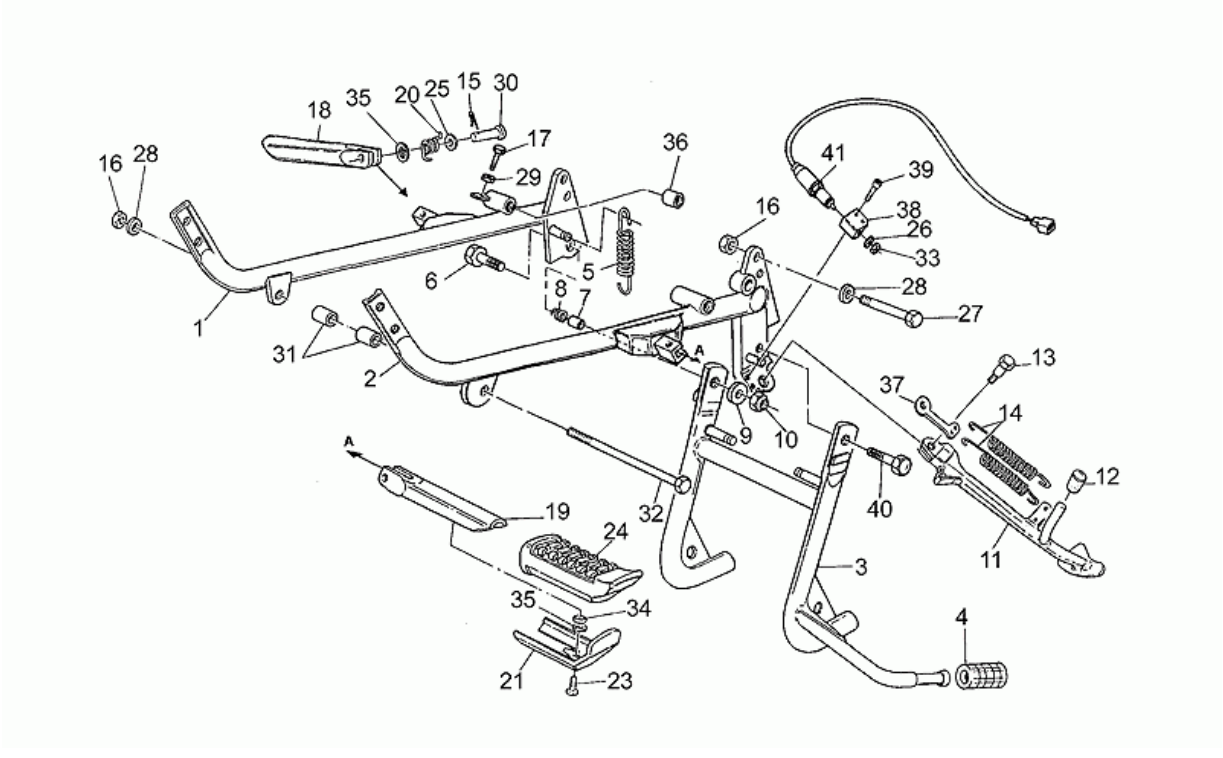

Pos.	Code	Description	Quant	Variants
1	GU31420380	Bras d.	1	
2	GU31422180	Bras g.	1	
3	GU23430370	Béquille centrale	1	
4	GU13432640	Pédale en caoutch.	1	
5	GU12434001	Ressort rappel béq.	2	
6	GU98054530	Vis	1	
7	GU91181114	Entretoise	2	
8	GU94322215	Ressort	2	
9	GU95000210	Rondelle	2	
10	GU92630510	Ecrou M10x1,5	2	
11	GU31432160	Béquille latérale chrome	1	
12	GU14423800	Caoutchouc	1	
13	GU99105129	Pivot	1	
14	GU17434060	Ressort	2	
15	GU95401215	Goupille	2	
16	GU92602210	Ecrou	3	
17	GU98054322	Vis	1	
18	GU23440710	Tuyau rep.-pieds av.d.	1	
19	GU23441810	Tuyau rep.-pieds av.g.	1	
20	GU23441110	Ressort	2	
21	GU23441210	Plaque	2	
23	GU98054314	Vis	2	
24	GU23443210	Pédale en caoutch.	2	
25	GU95000208	Rondelle	2	
26	GU61270300	Rondelle élastique 8x15x0,3	1	
27	GU98052565	Vis	2	
28	GU95004210	Rondelle 10,2x18x2	3	
29	GU92602206	Ecrou	1	

Groupe	CHASSIS
Code	33.04
Description	Béquille
Révision	1

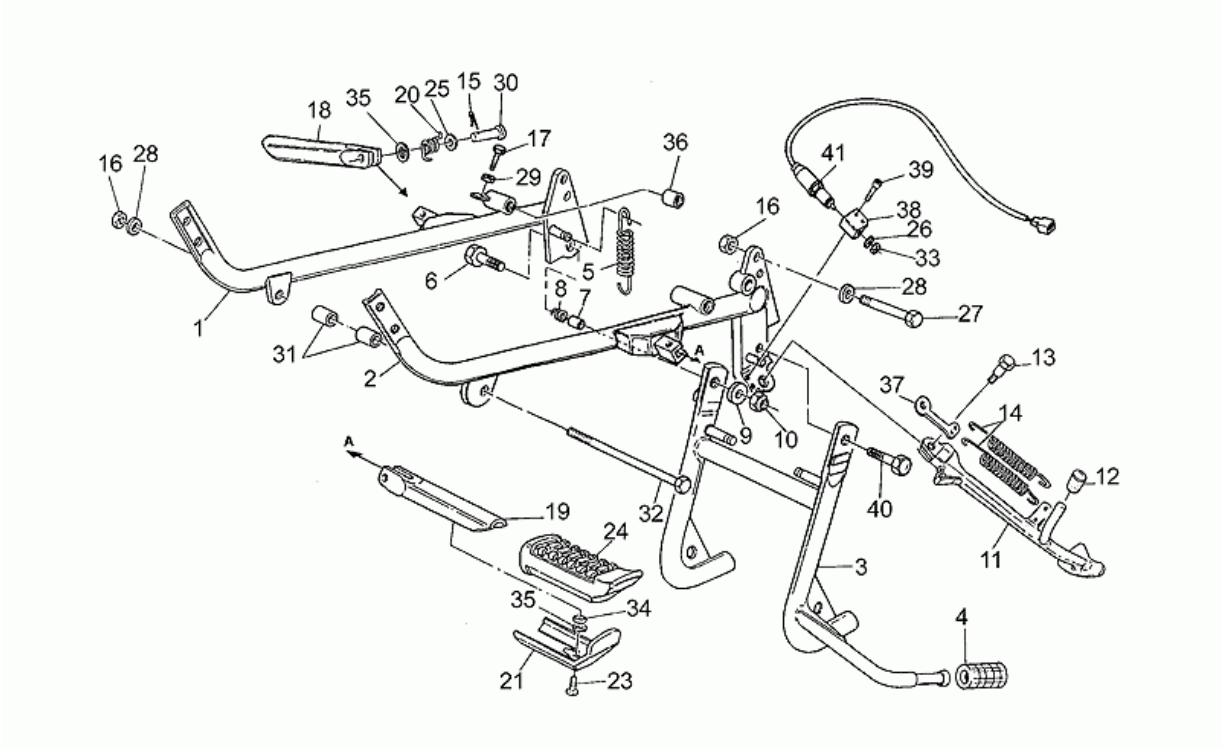

Pos.	Code	Description	Quant	Variants
30	GU23442210	Pivot	2	
31	GU19017000	Bague	2	
32	GU53429500	Pivot M10x250	1	
33	GU92602508	Ecrou M8x1	1	
34	GU91180602	Entretoise	2	
35	GU95129130	Rondelle élastique	4	
36	GU28252060	Douille 18 mm est.	4	
37	GU28432760	Plaquette	1	
38	GU31759360	Plaquette	1	
39	GU98612110	Vis	2	
40	GU98052535	Vis	1	
41	GU29759150	Interrupteur béquille	1	

Groupe	CHASSIS
Code	33.05
Description	Couple conique
Révision	1

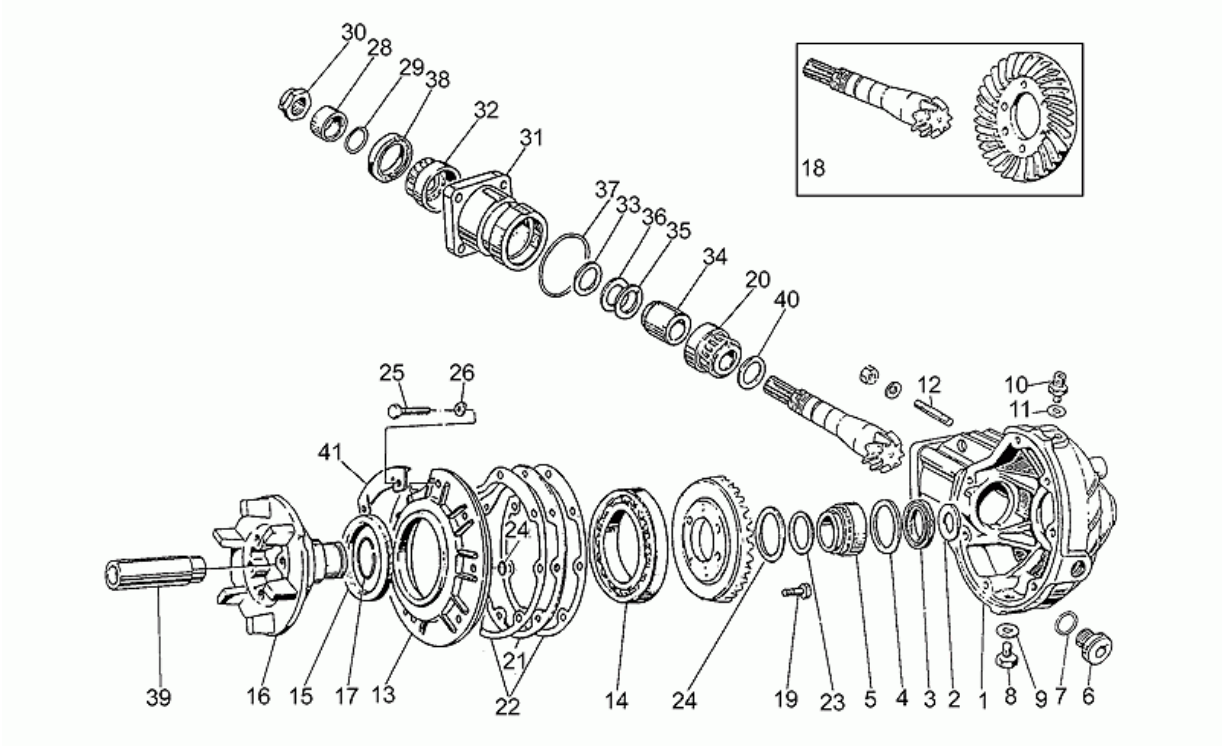

Pos.	Code	Description	Quant	Variants
1	GU31350380	Carter de transmission gris	1	
2	GU19351900	Rondelle d'appui	1	
3	GU90403547	Bague d'étanchéité 35x47x7	1	
4	GU19351100	Rondelle d'appui	1	
5	GU92252235	Roulement à rouleaux 35x50x17	1	
6	GU12022600	Bouchon huile	1	
7	GU90706203	Joint torique 20,24X2,62	1	
8	GU31003766	Bouchon vid.huile M10x1	1	
9	GU10528900	Garniture	1	
10	GU19206501	Bouchon purge	1	
11	GU10528900	Garniture	1	
12	GU96508055	Vis sans tête	4	
13	GU27350410	Couvercle	1	
14	GU92201070	Roulement à billes 70x110x13	1	
15	GU90407590	Bague d'étanchéité 75x90x8	1	
16	GU19351401	Pivot	1	
17	GU90353030	Bague de butée	1	
18	GU19354621	Couple conique Z=8/31	1	
19	GU19356320	Vis	6	
20	GU92249223	Roulement roul.con.	1	
21	GU19355400	Cale 0,8 mm	1	
21	GU19355402	Cale 0,9 mm	1	
21	GU19355404	Cale 1 mm	1	
21	GU19355406	Cale 1,1 mm	1	
21	GU19355408	Cale 1,2 mm	1	
21	GU19355410	Cale 1,3 mm	1	
21	GU19355411	Cale 1,4 mm	1	
21	GU19355412	Cale 1,5 mm	1	

Groupe	CHASSIS
Code	33.05
Description	Couple conique
Révision	1

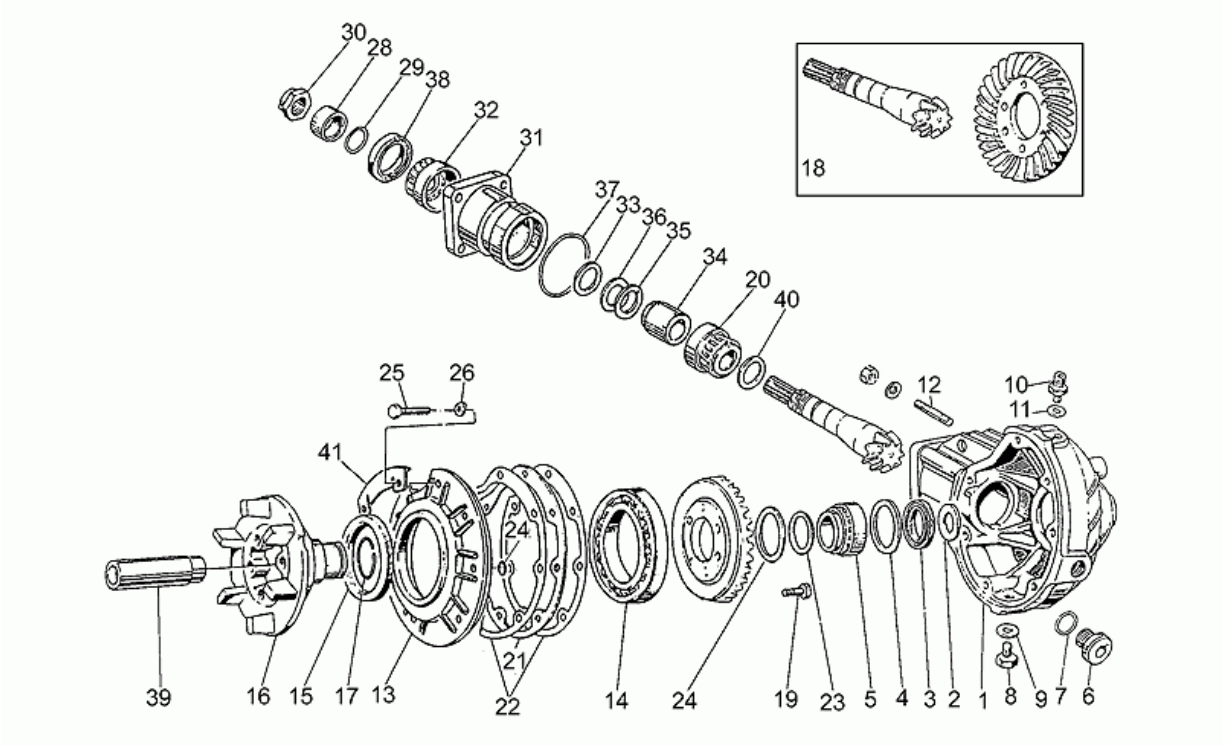

Pos.	Code	Description	Quant	Variants
21	GU19355413	Cale 1,6 mm	1	
22	GU19350700	Joint	2	
23	GU19352300	Rondelle éventail	1	
24	GU19353500	Rondelle éventail	1	
25	GU19357660	Vis	7	
26	GU61270300	Rondelle élastique 8x15x0,3	7	
28	GU19356801	Entretoise	1	
29	GU90706188	Bague d'étanchéité 18,77X1,78	1	
30	GU19356700	Ecrou	1	
31	GU19352401	Habillage roulement	1	
32	GU92249220	Roulement à rouleaux 20x47x14	1	
33	GU19355300	Cale 1 mm	2	
33	GU19355301	Cale 1,1 mm	2	
33	GU19355302	Cale 1,2 mm	2	
33	GU19355303	Cale 1,3 mm	2	
33	GU19355304	Cale 1,4 mm	2	
33	GU19355305	Cale 1,5 mm	2	
33	GU19355306	Cale 1,6 mm	2	
33	GU19355307	Cale 1,7 mm	2	
33	GU19355308	Cale 1,8 mm	2	
33	GU19355309	Cale 1,9 mm	2	
34	GU19355121	Entretoise	1	
35	GU19355200	Rondelle ajustem. 0,1 mm	1	
36	GU19355202	Rondelle ajustem. 0,15 mm	1	
37	GU90706552	Bague d'étanchéité	1	
38	GU90403247	Bague d'étanchéité	1	
39	GU27634110	Entretoise	2	
40	GU19355320	Cale 1 mm	1	

Groupe	CHASSIS
Code	33.05
Description	Couple conique
Révision	1

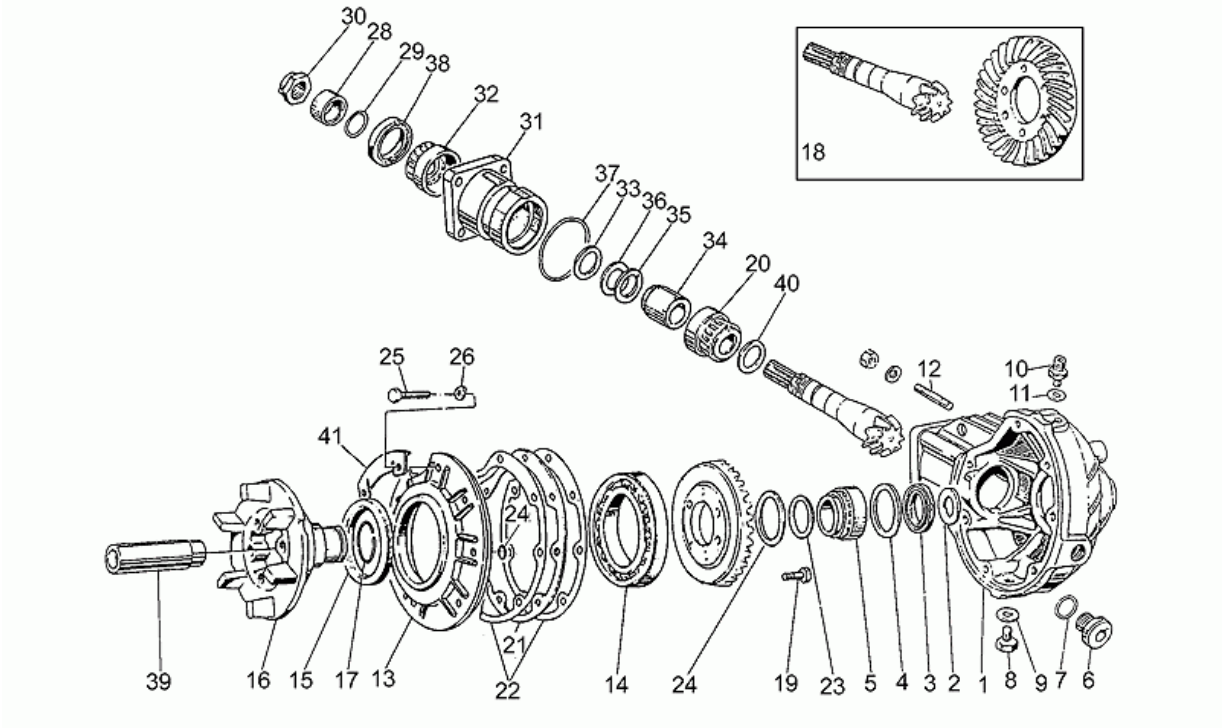

Pos.	Code	Description	Quant	Variants
40	GU19355321	Cale 1,1 mm	1	
40	GU19355322	Cale 1,2 mm	1	
40	GU19355323	Cale 1,3 mm	1	
40	GU19355324	Cale 1,4 mm	1	
40	GU19355325	Cale 1,5 mm	1	
40	GU19355326	Cale 1,6 mm	1	
40	GU19355327	Cale 1,7 mm	1	
40	GU19355328	Cale 1,8 mm	1	
40	GU19355329	Cale 1,9 mm	1	
41	GU27357411	Plaquette	1	
42	GU90706076	Joint torique	2	

Groupe	CHASSIS
Code	33.06
Description	Tableau de bord
Révision	1

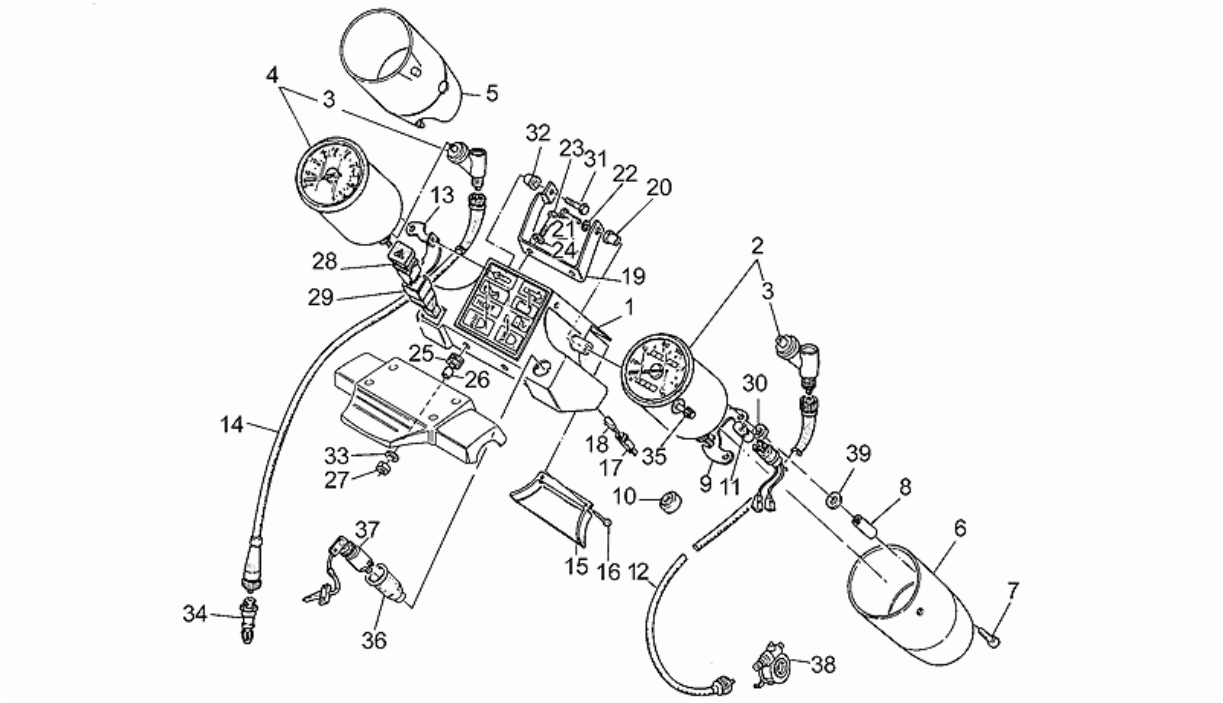

Pos.	Code	Description	Quant	Variants
1	GU23760010	Boîtier tableau de bord cpl.	1	
2	GU31761560	Compteur kilométrique	1	
3	GU23768310	Renvoi 60°	2	
4	GU31767260	Compte-tours	1	
5	GU23761910	Boîtier compte-tours	1	
6	GU23762010	Boîtier tachymètre	1	
7	GU98622214	Vis	2	
8	GU23765110	Entretoise	2	
9	GU23764910	Plaque	1	
10	GU17765560	Caoutchouc	4	
11	GU93450120	Lampe (ou Ampoule) 12v-3w	2	
12	GU27760410	Transmission tachymètre	1	
13	GU23766510	Plaque	1	
14	GU23768110	Transmission compte-tours	1	
15	GU29765250	Couvercle inférieure	1	
16	GU99210210	Vis taraud	2	
17	GU19768680	Porte-ampoule	8	
18	GU93450140	Lampe (ou Ampoule)	8	
19	GU23764110	Cavalier	1	
20	GU28766933	Entretoise	1	
21	GU98054225	Vis	1	
22	GU95004205	Rondelle	2	
23	GU98054320	Vis	2	
24	GU95004206	Rondelle 6,15x11x0,8	2	
25	GU91551085	Caoutchouc	2	
26	GU91180607	Entretoise	2	
27	GU92630106	Ecrou M6x1	2	
28	GU28745761	Turn indicator switch	1	

Groupe	CHASSIS
Code	33.06
Description	Tableau de bord
Révision	1

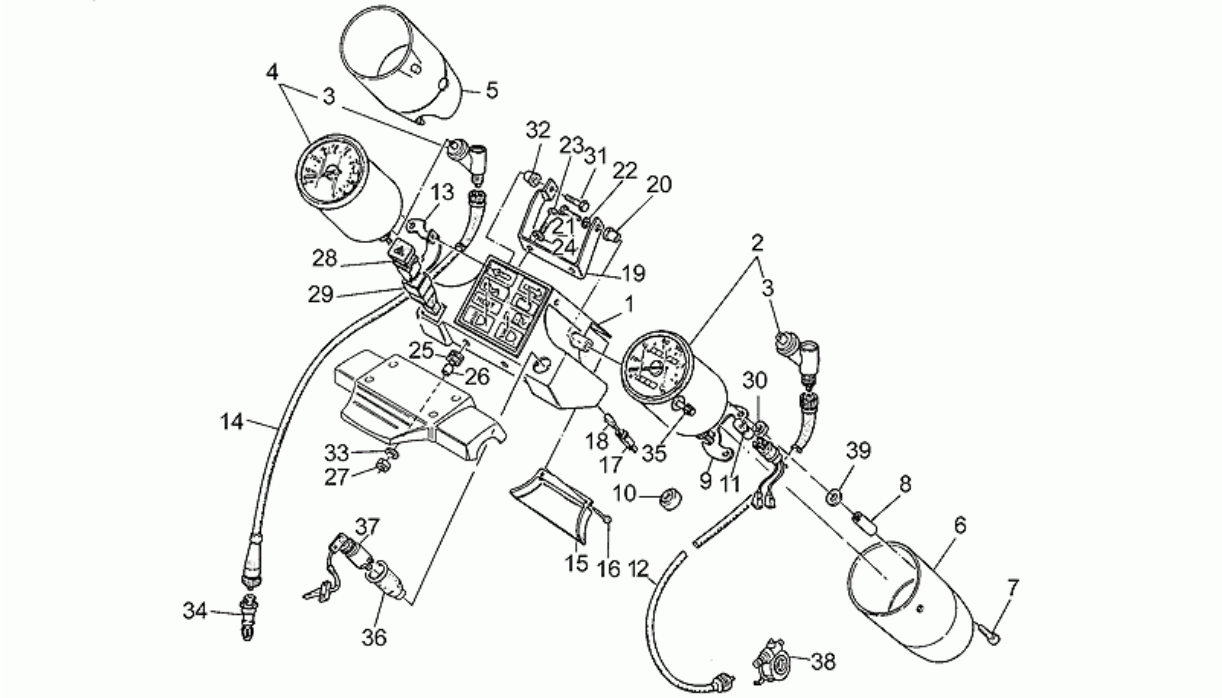

Pos.	Code	Description	Quant	Variants
29	GU35755780	Protection caoutch.	1	
30	GU93110060	Caoutchouc	4	
31	GU98054230	Vis	1	
32	GU23766910	Entretoise	1	
33	GU61013800	Rondelle spéciale	2	
34	GU14769200	Renvoi Z=14	1	
35	GU19762810	Poussoir RAZ	1	
36	GU19741336	Bague	1	
37	GU31735360	Bloc démarreur	1	
38	GU31762561	Renvoi compteur km	1	
38	GU31762562	Renvoi tachymètre	1	**Spécifications techniques:**See spare parts comm.n.036 of 2000[03600N]
39	GU95100060	Rondelle	2	

Groupe	CHASSIS
Code	33.07
Description	Phare avant-Klaxon
Révision	1

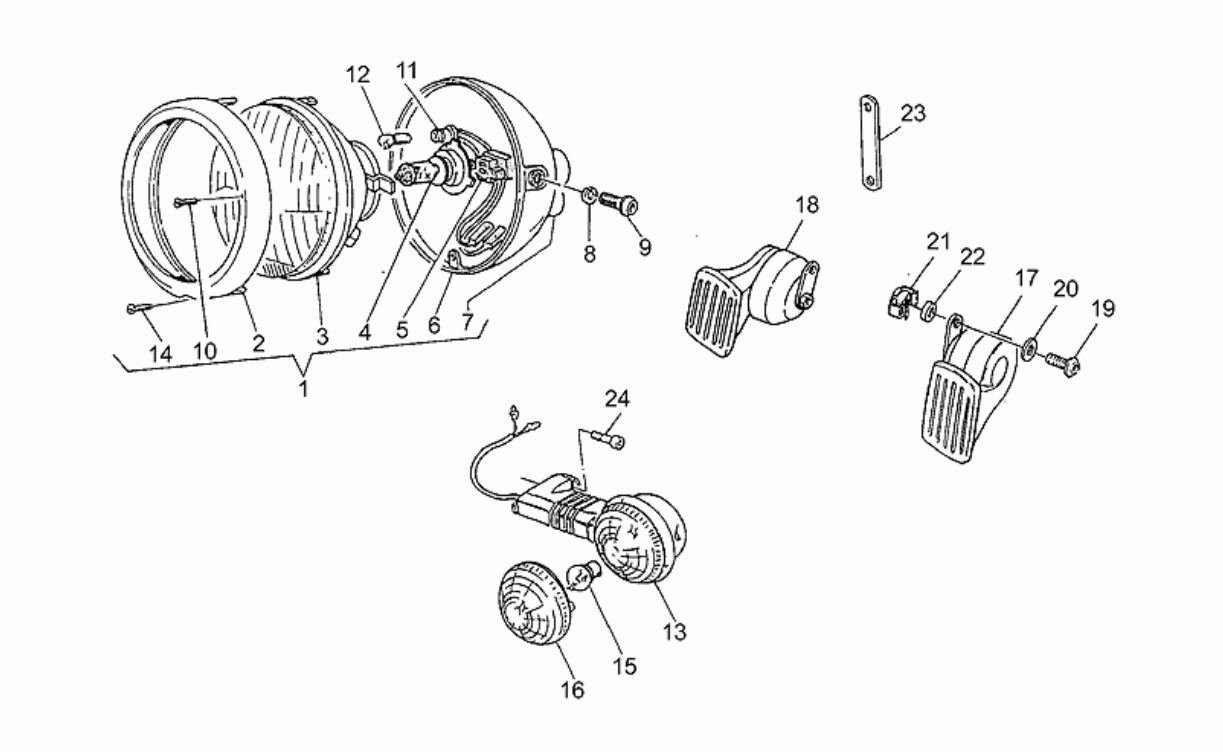

Pos.	Code	Description	Quant	Variants
1	GU28740533	Feu avant	1	
2	GU19740454	Cadre phare	1	
3	GU18740435	Groupe optique	1	
4	GU93450232	Lampe (ou Ampoule) 12V-55/60W	1	
5	GU14756255	Porte-ampoule	1	
6	GU23740418	Corps feu AV	1	
7	GU19740404	Bouchon calotte AR	1	
8	GU95007210	Rondelle	2	
9	GU98231022	Vis	2	
10	GU19740303	Vis embrayage	1	
11	GU17740405	Porte-ampoule	1	
12	GU93450119	Lampe (ou Ampoule)	1	
13	GU29751660	Indicateur direction	2	
14	GU19740302	Vis	1	
15	GU93450127	Lampe (ou Ampoule)	2	
16	GU29753760	Vitre clignotant	2	
17	GU28743761	Avertisseur ton grave	1	
18	GU28743760	Avertisseur ton aigu	1	
19	GU98230620	Vis	2	
20	GU95001206	Rondelle	2	
21	GU92660601	Ecrou en cage	2	
22	GU91180605	Entretoise	2	
23	GU31744560	Etrier avertisseur	4	
24	GU98612320	Vis	2	

Groupe	CHASSIS
Code	33.08
Description	Feu arrière
Révision	1

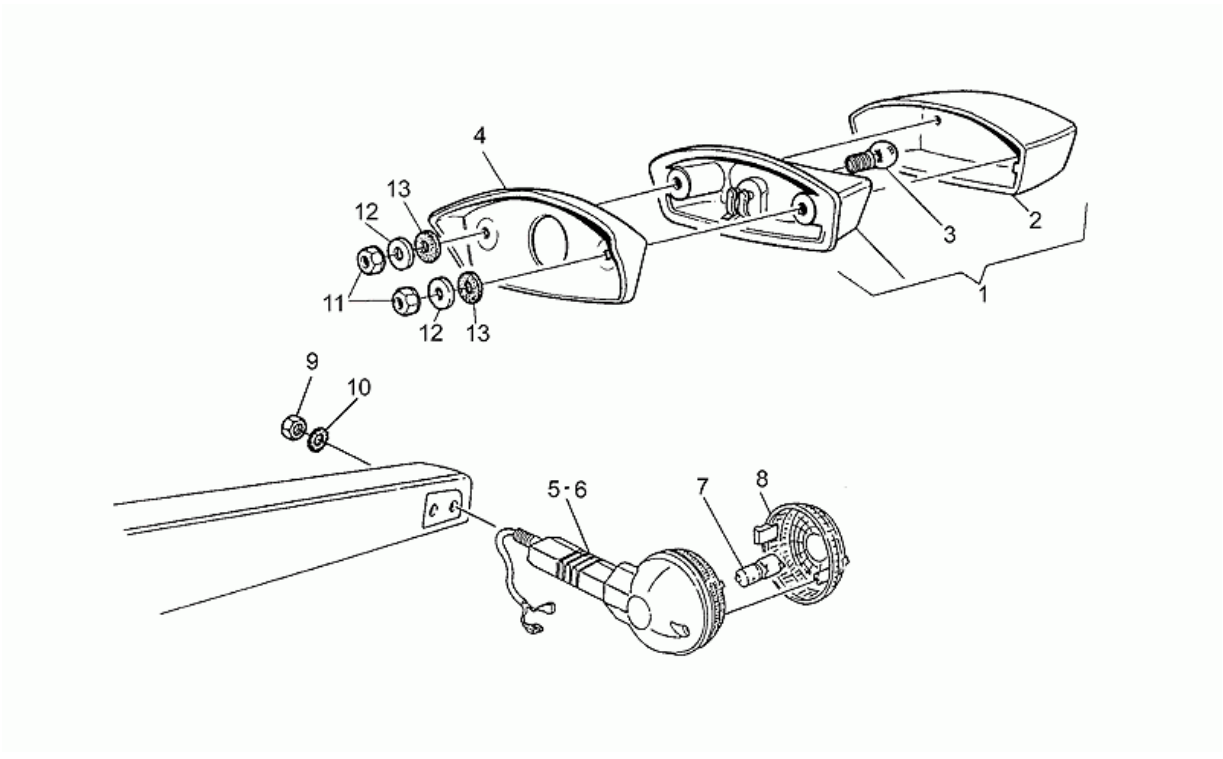

Pos.	Code	Description	Quant	Variants
1	GU31740960	Feu arrière	1	
2	GU31741760	Glace phare AR	1	
3	GU93450224	Lampe (ou Ampoule)	1	
4	GU31741260	Entretoise	1	
5	GU29750662	Indicateur direction D	1	
6	GU29750663	Indicateur direction G	1	
7	GU93450127	Lampe (ou Ampoule)	2	
8	GU29753760	Vitre clignotant	2	
9	GU92602512	Ecrou bas M12x1,25	2	
10	GU95021112	Rondelle évent.	2	
11	GU92630106	Ecrou M6x1	2	
12	GU95000206	Rondelle	2	
13	GU93110060	Caoutchouc	2	

Groupe	CHASSIS
Code	33.09
Description	Filtre air
Révision	1

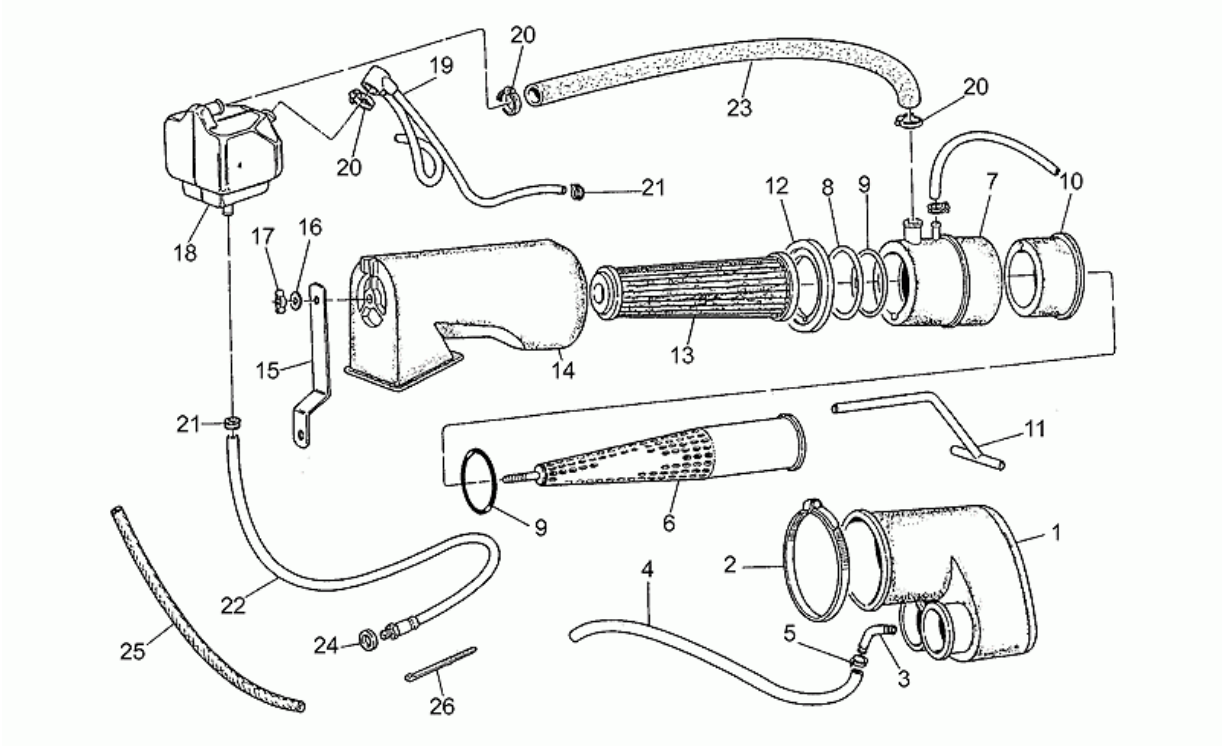

Pos.	Code	Description	Quant	Variants
1	GU19114300	Collecteur aspiration	1	
2	GU93305092	Collier	1	
3	GU17114650	Tuyau	1	
4	GU00823944050	Tuyau 5X9	1	
5	GU14609650	Collier 3,6x20,6	1	
6	GU31155780	Support filtre	1	
7	GU19156701	Manchon AV	1	
8	GU19113900	Joint	1	
9	GU90706552	Bague d'étanchéité	2	
10	GU19156900	Manchon AR	1	
11	GU19156001	Tuyau reniflard radiateur	1	
12	GU17113450	Bague	1	
13	GU17113651	Filtre air	1	
14	GU17114050	Couvercle filtre	1	
15	GU27114120	Plaque support	1	
16	GU95100059	Rondelle 5,25x14x1,5	1	
17	GU92670305	Ecrou	1	
18	GU27153460	Corp	1	
19	GU27159660	Reniflard	1	
20	GU93305018	Collier	3	
21	GU61108400	Collier	3	
22	GU27159360	Reniflard	1	
23	GU30157430	Tuyau	1	
24	GU12154200	Joint 8,25x15x1	1	
25	GU00823923140	Gaine thermique	1	
26	GU61609630	Collier	1	

Groupe	CHASSIS
Code	33.10
Description	Fourche Av.
Révision	1

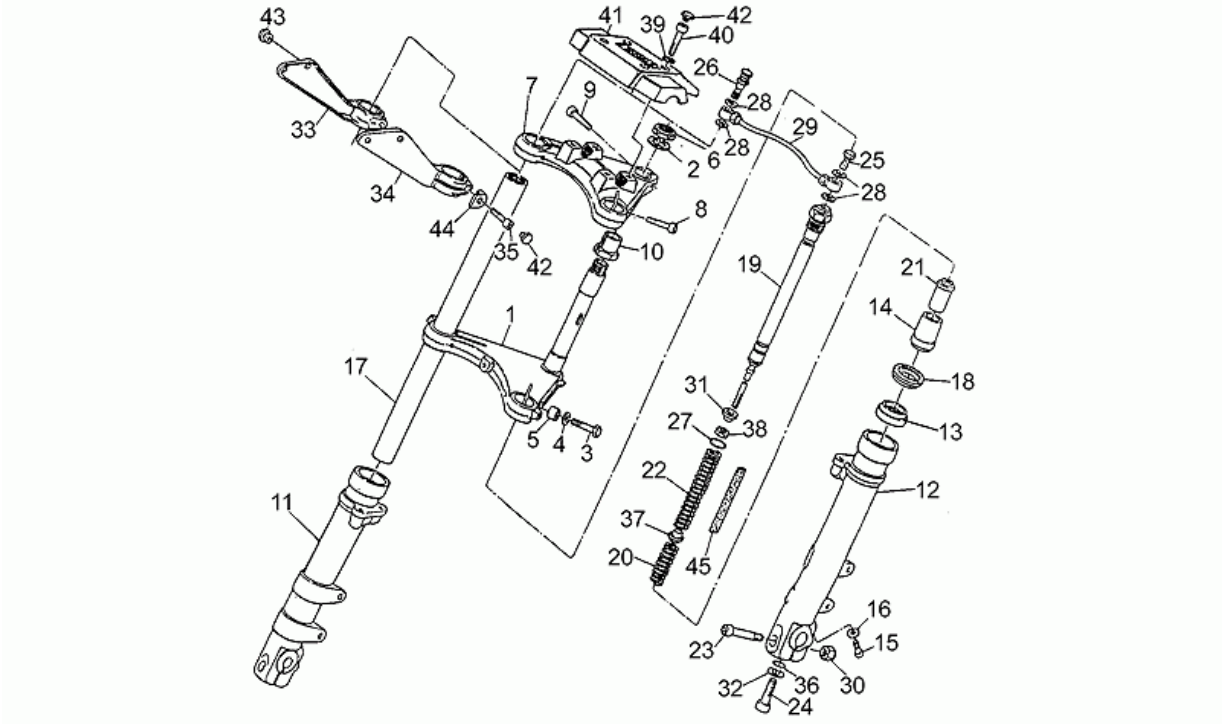

Pos.	Code	Description	Quant	Variants
1	GU23494070	Base avec tube	1	
2	GU18513560	Rondelle bouchon fourreau	1	
3	GU98072555	Vis	2	
4	GU95007210	Rondelle	2	
5	GU91181016	Entretoise	2	
6	GU18513460	Bouchon tube	1	
7	GU31493140	Plaque sup. fourche POLIZIA	1	
8	GU98610540	Vis	2	
9	GU98612535	Vis	1	
10	GU18516660	Douille bloc. direction	1	
11	GU31522565	Fourreau D	1	
12	GU31522665	Fourreau G	1	
13	GU90403857	Joint spi	2	
14	GU20527620	Douille	2	
15	GU98622320	Vis	2	
16	GU95100116	Rondelle 6,25x10x1,5	4	
17	GU23525470	Tige	2	
18	GU31524550	Pare-poussière	2	
19	GU23526470	Amortisseur	2	
20	GU23526610	Contre-ressort	2	
21	GU28527540	Tampon fin course	2	
22	GU23526910	Ressort	2	
23	GU98622545	Vis	2	
24	GU98622530	Vis	2	
25	GU28556450	Vis percée	1	
26	GU28556250	Soupape air	1	
27	GU90706282	Bague d'étanchéité	2	
28	GU28556350	Rondelle en cuivre	4	

Groupe	CHASSIS
Code	33.10
Description	Fourche Av.
Révision	1

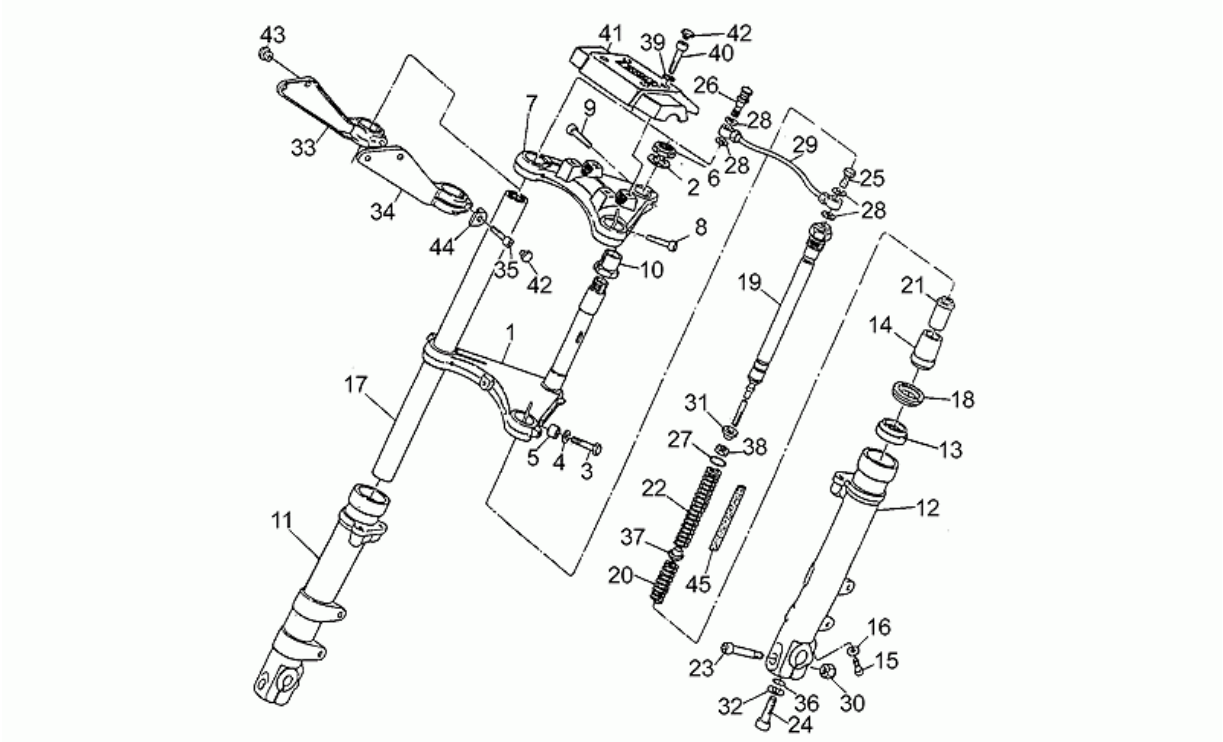

Pos.	Code	Description	Quant	Variants
29	GU19529660	Tuyau amortisseur AV	1	
30	GU92781100	Ecrou	2	
31	GU28526540	Rondelle	2	
32	GU27499120	Rondelle plate	2	
33	GU23496170	Support droite	1	
34	GU23496270	Support gauche	1	
35	GU98622425	Vis	2	
36	GU90706094	Joint torique 9x2	2	
37	GU23527910	Entretoise	2	
38	GU92602308	Ecrou	2	
39	GU14615901	Rondelle 8,4X13X0,8	4	
40	GU98620435	Vis	4	
41	GU23500210	Plaque fixation guidon	1	
42	GU23943410	Bouchon	6	
43	GU93180111	Bouchon 15 mm	2	
44	GU23497910	Entretoise	2	
45	GU23526370	Tube anti-frottement	2	

Groupe	CHASSIS
Code	33.11
Description	Fourche arriere
Révision	1

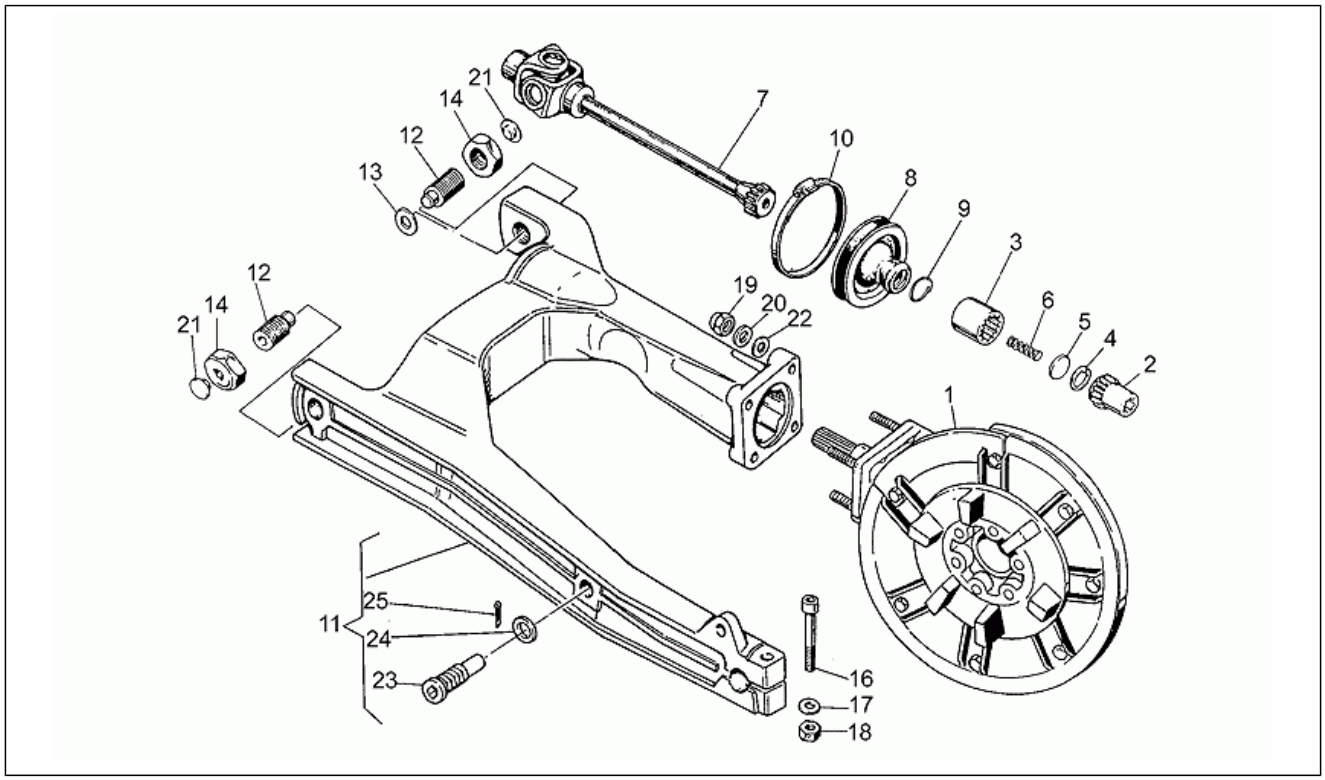

Pos.	Code	Description	Quant	Variants
1	GU31350280	Carter de transm.compl.gris	1	
2	GU19327701	Manchon	1	
3	GU19328801	Manchon	1	
4	GU90272023	Bague seeger	1	
5	GU19327601	Disque	1	
6	GU94321099	Ressort	1	
7	GU23328081	Joint	1	
8	GU23548080	Collier de protection	1	
9	GU23548180	Ressort	1	
10	GU93305074	Collier	1	
11	GU31540280	Fourche ar.gris	1	**Spécifications techniques:**See spare parts comm.n.030 of 1999[03099N]
12	GU19547000	Pivot	2	
13	GU35214300	Cale	1	
14	GU14547800	Ecrou	2	
16	GU98620545	Vis	1	
17	GU95004210	Rondelle 10,2x18x2	1	
18	GU92602210	Ecrou	1	
19	GU92781081	Ecrou	4	
20	GU14615901	Rondelle 8,4X13X0,8	4	
21	GU93180105	Bouchon	2	
22	GU95004208	Rondelle	4	
23	GU31544160	Pivot	1	**Spécifications techniques:**See spare parts comm.n.030 of 1999[03099N]
24	GU95100523	Rondelle 14,5X20X1	1	**Spécifications techniques:**See spare parts comm.n.030 of 1999[03099N]
25	GU95500222	Goupille	1	**Spécifications techniques:**See spare parts comm.n.030 of 1999[03099N]

Groupe	CHASSIS
Code	33.12
Description	Circuit electrique
Révision	1

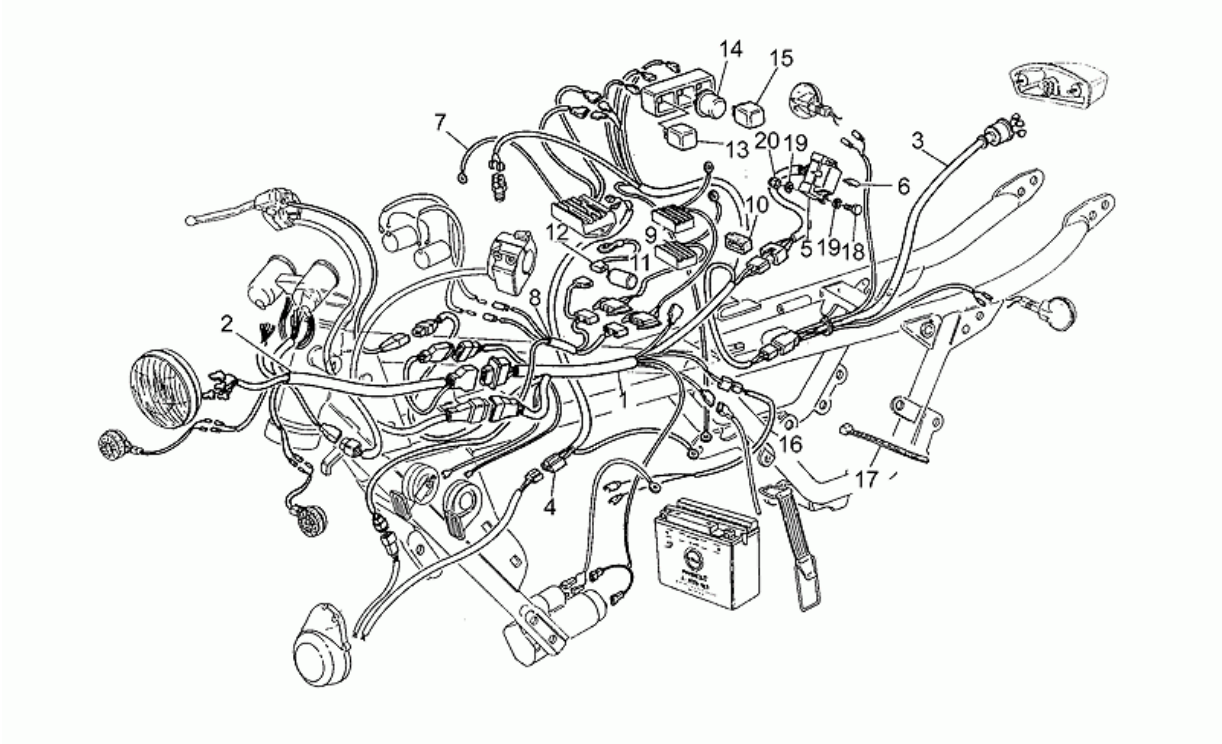

Pos.	Code	Description	Quant	Variants
1	GU31747160	Circuit electrique	1	
2	GU31747260	Câblage tableau de bord	1	
3	GU31747360	Câblage feu AR	1	
4	GU29725850	Câblage alternat.-régulateur	1	
5	GU30743000	Boîte à fusibles	1	
6	GU28742560	Fusible 15A	6	
7	GU29748550	Câblage alternat.-régulateur	1	
8	GU31722140	Câblage HT	1	
9	GU23721493	Centrale elettronica	2	
10	GU27723835	Support élastique	2	
11	GU27710435	Condensateur	1	
12	GU18759550	Cable	1	
13	GU30732510	Relais démarrage	1	
14	GU17750520	Clignotement	1	
15	GU28732560	Relais sirènes	1	
16	GU31724540	Câble capteur point mort	1	
17	GU14609650	Collier 3,6x20,6	1	
18	GU98202516	Vis	2	
19	GU95100059	Rondelle 5,25x14x1,5	4	
20	GU92630105	Ecrou	2	

Groupe	CHASSIS
Code	33.13
Description	Guidon - Commandes
Révision	1

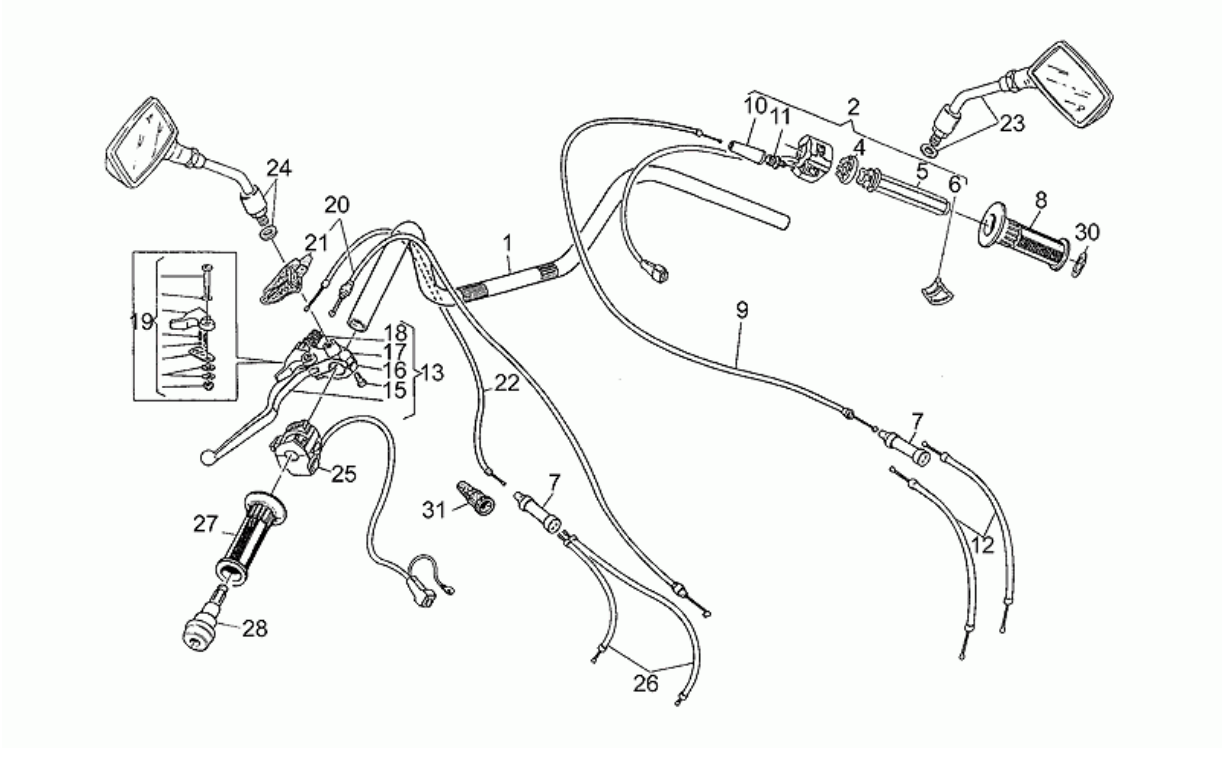

Pos.	Code	Description	Quant	Variants
1	GU29600351	Guidon	1	
2	GU27603400	Commande gaz	1	
4	GU27604415	Bloc conduite	1	
5	GU27603815	Corps mobile	1	
6	GU27604515	Guide-câble	1	
7	GU30607910	Dedoublereur	2	
8	GU31603560	Poignée dr.	1	
9	GU27117515	Câble gaz	1	
10	GU27117615	Capuchon	1	
11	GU27603715	Vis embrayage	2	
12	GU27117775	Câble gaz	2	
13	GU30605530	Levier embrayage complet	1	
15	GU27601215	Vis	2	
16	GU27601015	Cavalier	1	
17	GU27601815	Cavalier levier embr	1	
18	GU30602500	Réglage	1	
19	GU27659415	Levier	1	
20	GU31093061	Câble embrayage	1	
21	GU27663815	Protection	1	
22	GU27132815	Câble starter	1	
23	GU14769870	Miroir rétroviseur dte	1	**Spécifications techniques:**See spare parts comm.n.007 of 1997[00797N]
24	GU14769470	Miroir rétroviseur gche	1	**Spécifications techniques:**See spare parts comm.n.007 of 1997[00797N]
25	GU27738015	Déviateur feux gche	1	
26	GU27133515	Câble starter	1	
27	GU31603060	Poignée gc.	1	
28	GU29602760	Masse antivibratile guidon	1	

Groupe	CHASSIS
Code	33.13
Description	Guidon - Commandes
Révision	1

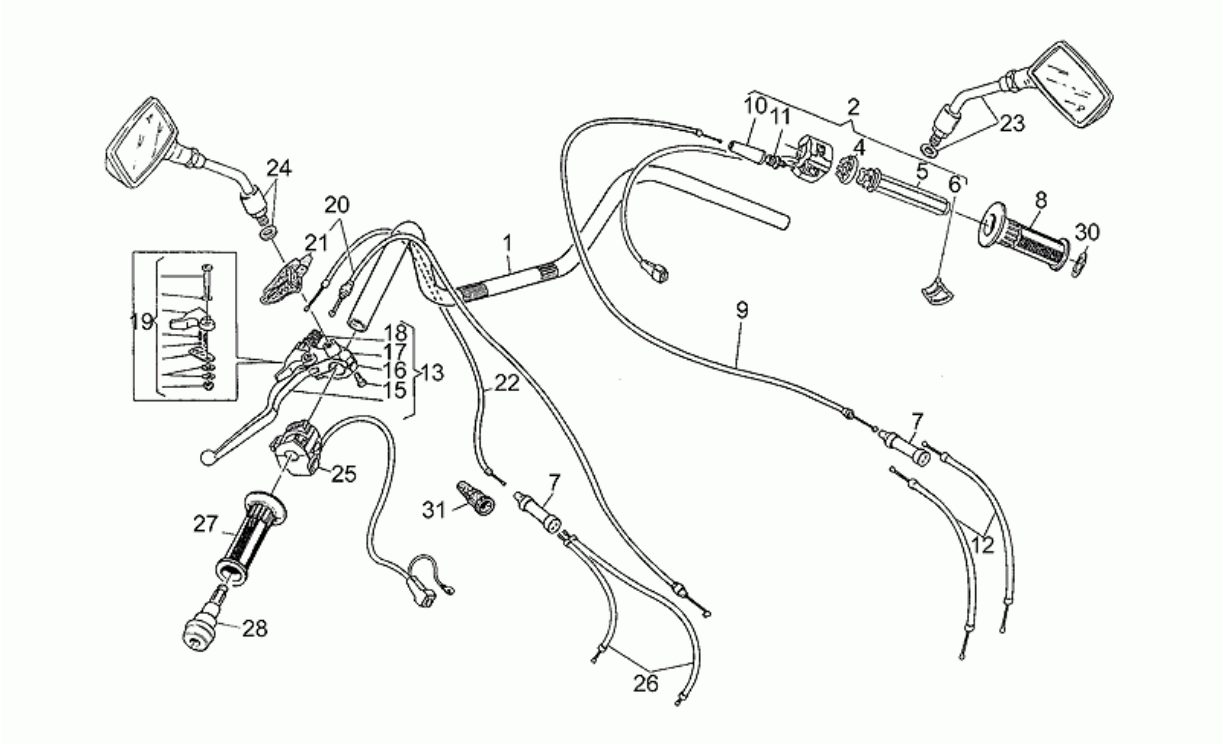

Pos.	Code	Description	Quant	Variants
30	GU29606970	Rondelle nylon	1	
31	GU12717600	Capuchon	2	

Groupe	CHASSIS
Code	33.14
Description	Garde-boue AV-AR
Révision	1

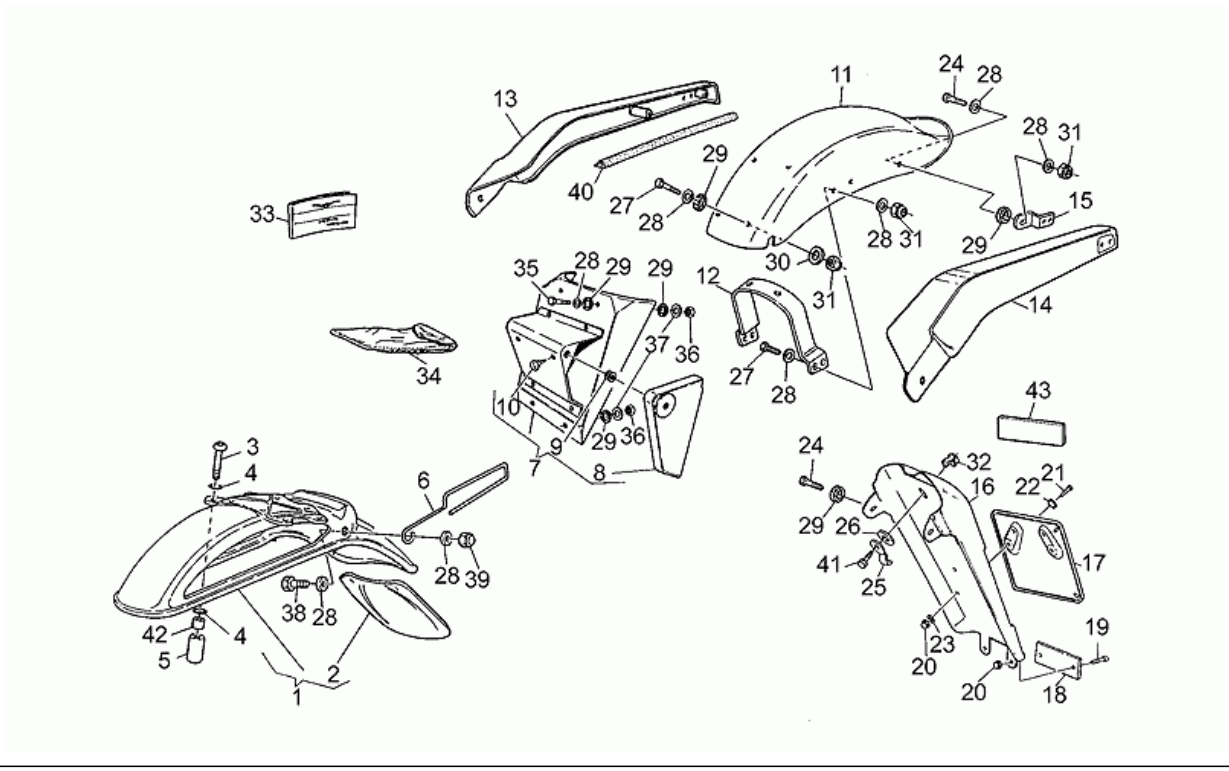

Pos.	Code	Description	Quant	Variants
1	GU274344201	Garde-boue av.brut	1	**Couleur véhicule:**Brut[gr]
1	GU31434381	Garde-boue Av.	1	**Couleur véhicule:** Noir[b]
1	GU31434382	Garde-boue Av.	1	**Couleur véhicule:** Blanc[w]
2	GU27436920	Bavette anti-éclaboussures	1	
3	GU98230845	Vis	4	
4	GU90706092	Joint torique	4	
5	GU31436415	Entretoise	4	
6	GU31659760	Guide-câble	2	
7	GU31479560	Bavette anti-éclaboussures	1	
8	GU31479760	Couvercle	1	
9	GU91551085	Caoutchouc	1	
10	GU19705900	Tampon	1	
11	GU314370801	Garde-boue Ar.	1	**Couleur véhicule:**Brut[gr]
11	GU31437081	Garde-boue Ar.	1	**Couleur véhicule:** Noir[b]
11	GU31437082	Garde-boue Ar.	1	**Couleur véhicule:** Blanc[w]
12	GU31439160	Support g-boue AR	1	
13	GU31457860	Couvercle arr.d.chromate	1	
14	GU31459160	Couvercle arr.g.chromate	1	
15	GU31575560	Plaquette	2	
16	GU31438060	Rallonge g-boue AR	1	
17	GU39474600	Porte-plaque	1	
18	GU31745860	Catadioptre arrière	1	
19	GU98622216	Vis	2	
20	GU92630105	Ecrou	6	
21	GU98054212	Vis	4	
22	GU90706035	Joint torique	4	
23	GU95000205	Rondelle	4	
24	GU98054312	Vis	5	

Groupe	CHASSIS
Code	33.14
Description	Garde-boue AV-AR
Révision	1

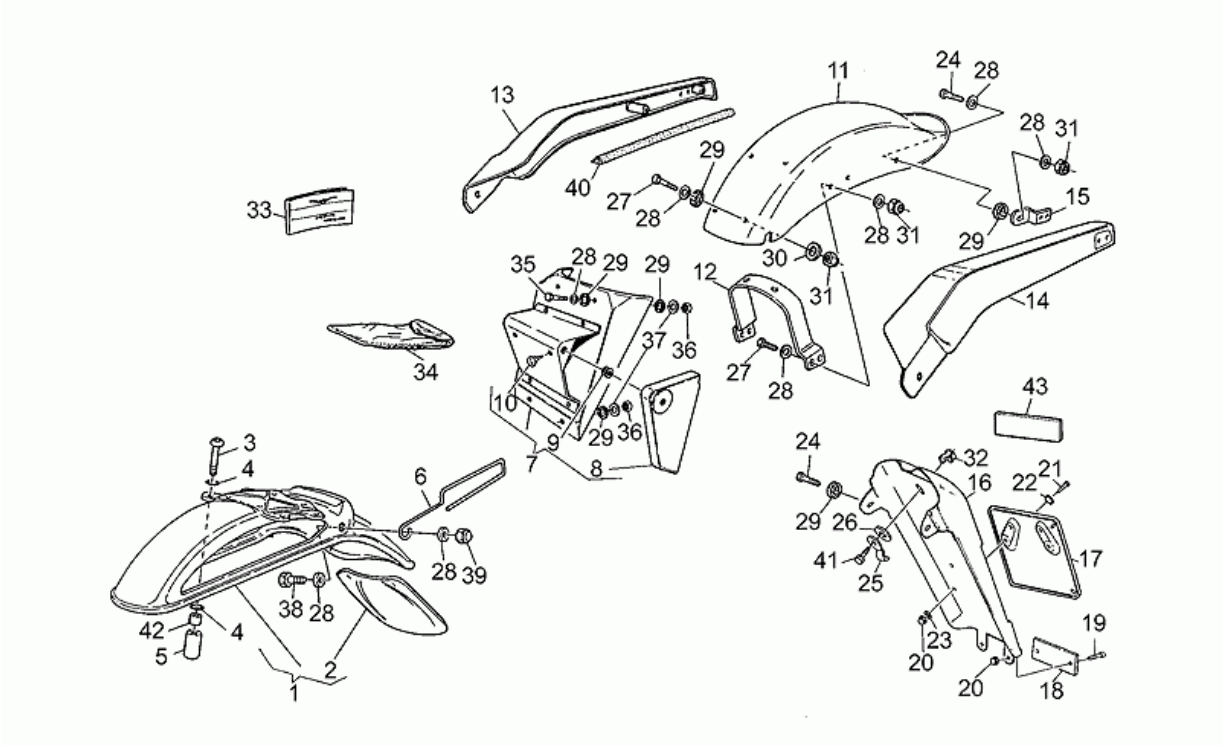

Pos.	Code	Description	Quant	Variants
25	GU93301175	Cavalier	1	
26	GU95100141	Rondelle 6,4x12x1,2	3	
27	GU98054320	Vis	6	
28	GU95000206	Rondelle	14	
29	GU93110060	Caoutchouc	14	
30	GU95100120	Rondelle	2	
31	GU92630206	Ecrou M6x1	6	
32	GU92660601	Ecrou en cage	3	
33	GU31900060	Livret d'util.et entret.	1	**Pays:**Italie[I]
33	GU31900061	Livret d'util.et entret.	1	**Pays:**Allemagne[D], France[F], Angleterre[UK]
34	GU28929940	Trousse à outils	1	
35	GU98054325	Vis	2	
36	GU92630106	Ecrou M6x1	4	
37	GU95100141	Rondelle 6,4x12x1,2	4	
38	GU98054316	Vis	2	
39	GU92781062	Ecrou	2	
40	GU00823931070	Joint	2	
41	GU98054318	Vis	1	
42	GU28436460	Douille	4	
43	GU29579460	Garniture adhesif	1	

Groupe	CHASSIS
Code	33.15
Description	Repose-Pieds
Révision	1

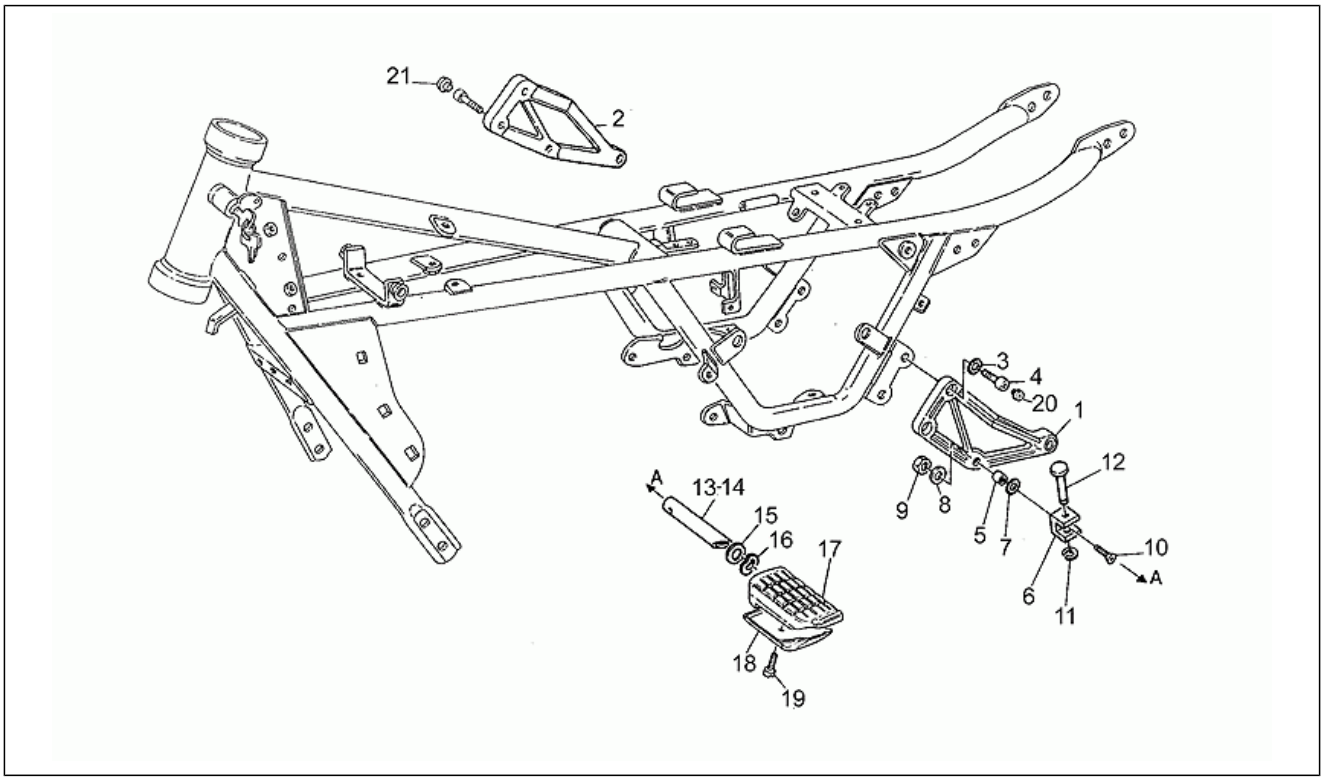

Pos.	Code	Description	Quant	Variants
1	GU23446010	Support r-p. G pass.	1	
2	GU23443510	Support r-p. pass.dr.	1	
3	GU14615901	Rondelle 8,4X13X0,8	4	
4	GU98622416	Vis	4	
5	GU29436450	Douille	2	
6	GU66441730	Plaque fdc r-pied	2	
7	GU95021108	Rondelle élastique	2	
8	GU61270300	Rondelle élastique 8x15x0,3	2	
9	GU92630508	Ecrou	2	
10	GU98250835	Vis	2	
11	GU90280006	Bague de butée	2	
12	GU66440630	Pivot	2	
13	GU66440730	Tuyau rep.-pieds av.d.	1	
14	GU66441830	Tuyau rep.-pieds av.g.	1	
15	GU66441630	Cale	2	
16	GU51609800	Rondelle élastique	2	
17	GU66443230	Repose pieds	2	
18	GU31441260	Plaquette	2	
19	GU98304014	Vis	2	
20	GU93180206	Caoutchouc	2	
21	GU23943410	Bouchon	5	

Groupe	CHASSIS
Code	33.16
Description	Pince frein
Révision	1

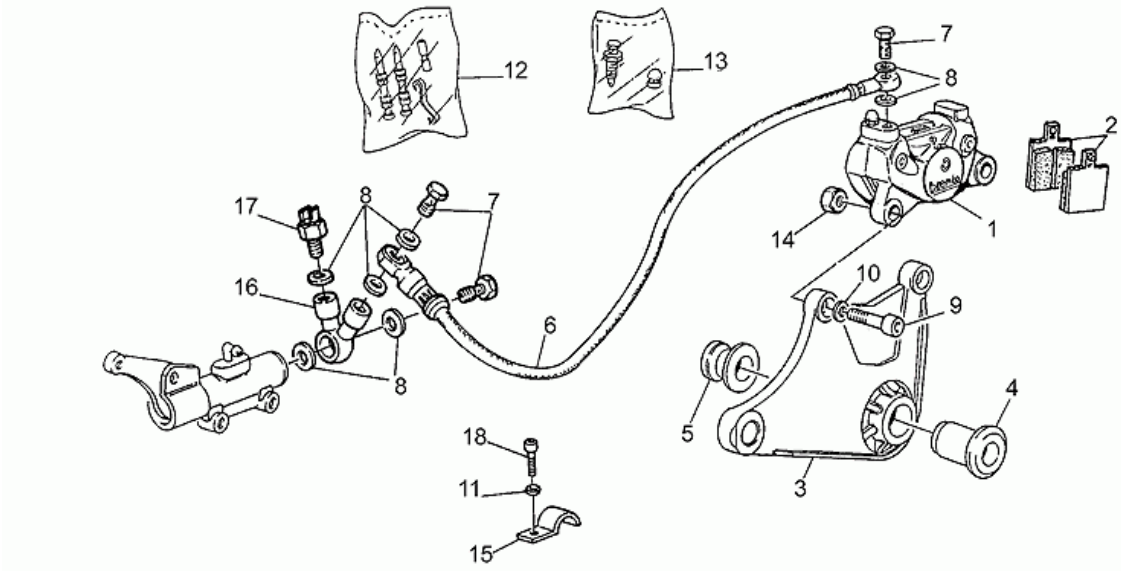

Pos.	Code	Description	Quant	Variants
1	GU23653011	Pince frein arrière	1	
2	GU31654660	Plaquettes-paire	1	
3	GU27635811	Plaq. fix pince frein	1	
4	GU31634230	Bague	1	
5	GU31634130	Entretoise	1	
6	GU28657500	Tube frein	1	
7	GU95990028	Vis tuyau huile *	3	
8	GU25656100	Garniture	7	
9	GU98612425	Vis	2	
10	GU61270300	Rondelle élastique 8x15x0,3	2	
11	GU95000206	Rondelle	1	
12	GU31659160	Axes+ressort BREMBO	1	
13	GU31659260	Purge+capuchon BREMBO D.10	1	
14	GU92602208	Ecrou	1	
15	GU93301313	Cavalier	1	
16	GU19668000	Raccord	1	
17	GU31654765	Couvercle pince frein GRIMECA	2	**Spécifications techniques:**See technical comm.n.298 of 1995[29895C]
17	GU63657000	Interrupteur	1	
18	GU31654665	Plaquettes-paire GRIMECA	2	**Spécifications techniques:**See technical comm.n.298 of 1995[29895C]
18	GU98622310	Vis	1	
23	GU31659265	Purge+capuchon GRIMECA	2	**Spécifications techniques:**See technical comm.n.298 of 1995[29895C]
24	GU31659165	Axes+ressort GRIMECA	2	**Spécifications techniques:**See technical comm.n.298 of 1995[29895C]
25	GU66659031	Kit révision pince GRIMECA	2	**Spécifications techniques:**See technical comm.n.298 of 1995[29895C]

Groupe	CHASSIS
Code	33.17
Description	Maît. cyl. frein AV
Révision	1

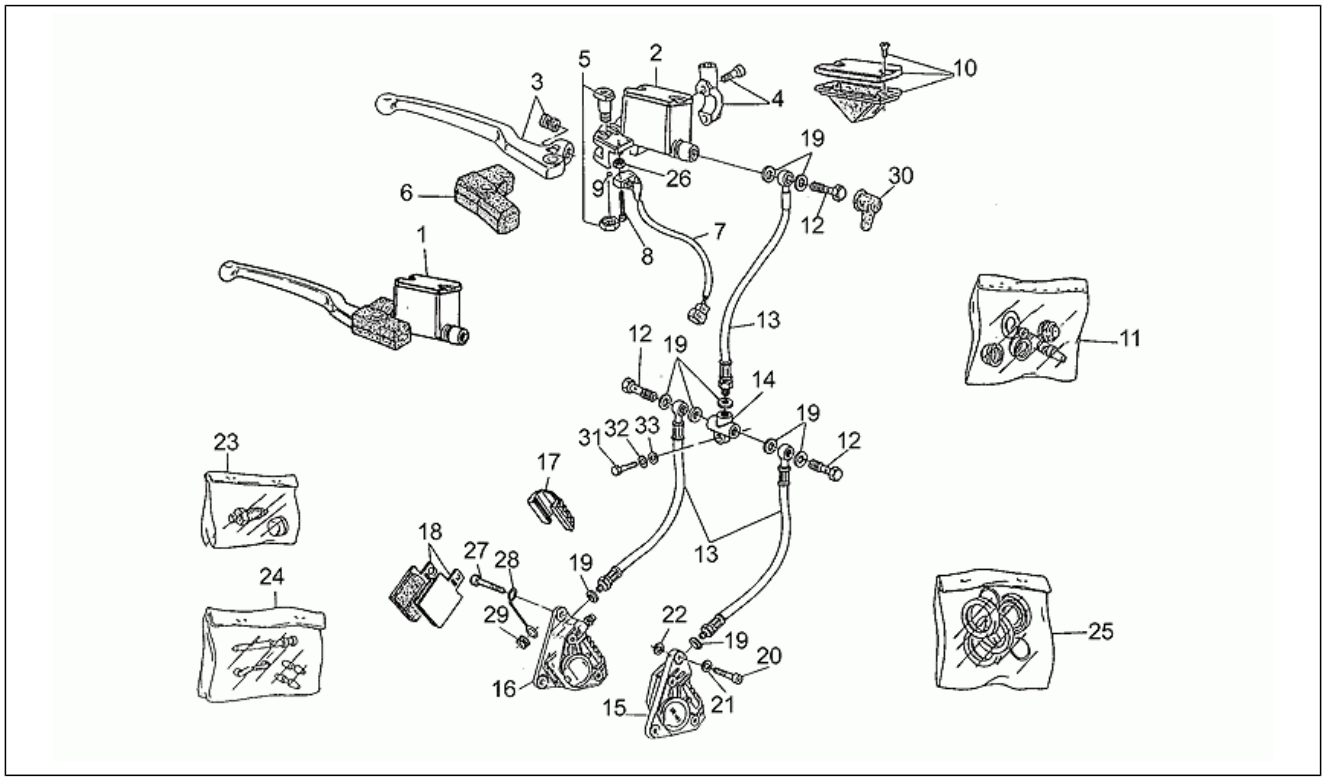

Pos.	Code	Description	Quant	Variants
1	GU28660178	Maît. cyl. frein AV	1	
2	GU28660278	Maît. cyl. frein AV	1	
3	GU28605678	Levier frein avant	1	
4	GU27664075	Cavalier	1	
5	GU27604815	Pivot	1	
6	GU27663615	Capuchon	1	
7	GU27749815	Interrupteur stop	1	
8	GU98200214	Vis	2	
9	GU92295708	Bille	1	
10	GU27661115	Couvercle pompe	1	
11	GU28659378	Kit révision pompe	1	
12	GU95990028	Vis tuyau huile *	3	
13	GU31657160	Tuyau flexible	3	
14	GU31656860	Répartiteur	1	
15	GU31652265	Pince frein AV D Grimeca	1	**Spécifications techniques:**See technical comm.n.298 of 1995[29895C]
16	GU31652365	Pince frein AV G Grimeca	1	**Spécifications techniques:**See technical comm.n.298 of 1995[29895C]
17	GU39654700	Couvercle pince frein BREMBO	2	
18	GU27654610	Plaquettes-paire BREMBO	1	
19	GU25656100	Garniture	8	
20	GU98622422	Vis	3	
21	GU61270300	Rondelle élastique 8x15x0,3	4	
22	GU95100250	Rondelle 8,5X18X0,5	1	
22	GU95100251	Rondelle 8,5X18X0,8	1	
23	GU65659200	Purge+capuchon BREMBO D.6	1	
24	GU39659100	Axes+ressort BREMBO	1	
25	GU39659000	Kit révision pince BREMBO	1	

Groupe	CHASSIS
Code	33.17
Description	Maît. cyl. frein AV
Révision	1

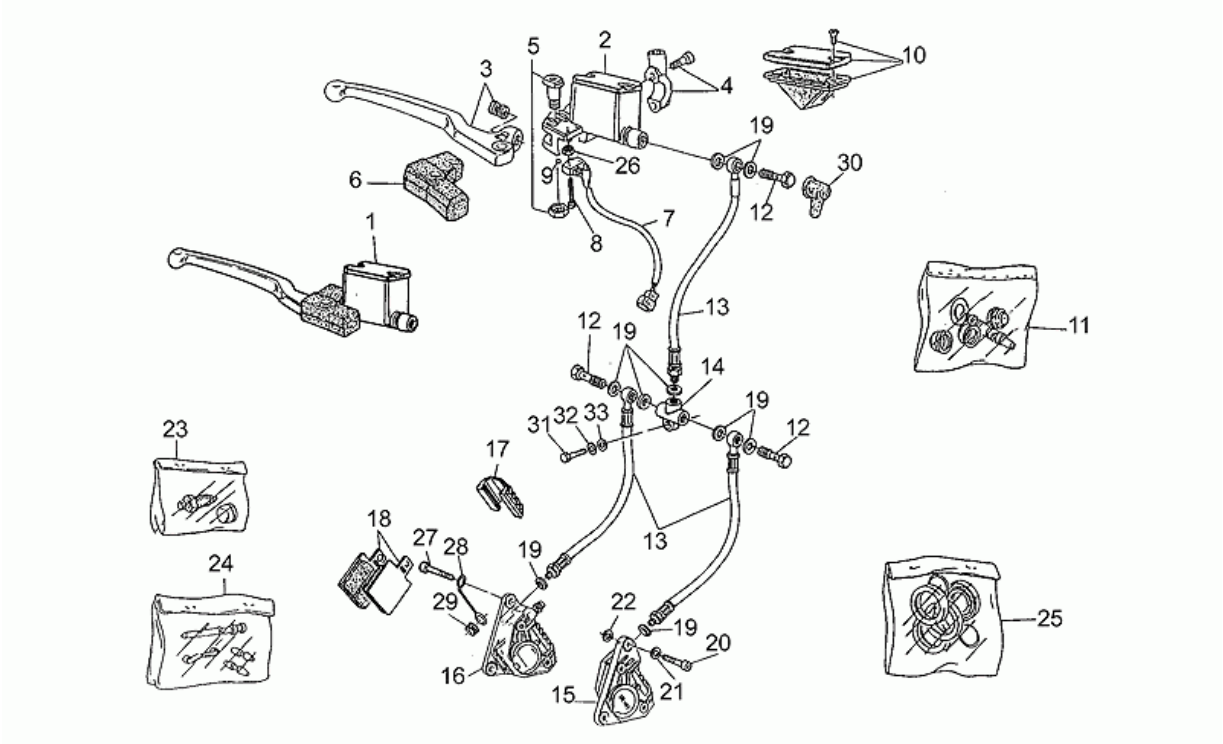

Pos.	Code	Description	Quant	Variants
26	GU92608202	Ecrou	2	
27	GU98622425	Vis	1	
28	GU23655770	Guide-câble	1	
29	GU91551120	Bague	1	
30	GU39663801	Capuchon	1	
31	GU98054330	Vis	1	
32	GU95004206	Rondelle 6,15x11x0,8	1	
33	GU95021106	Rondelle évent.	1	

PIAGGIO&C.s.p.a.

Groupe	CHASSIS
Code	33.18
Description	Pompe frein arrière
Révision	1

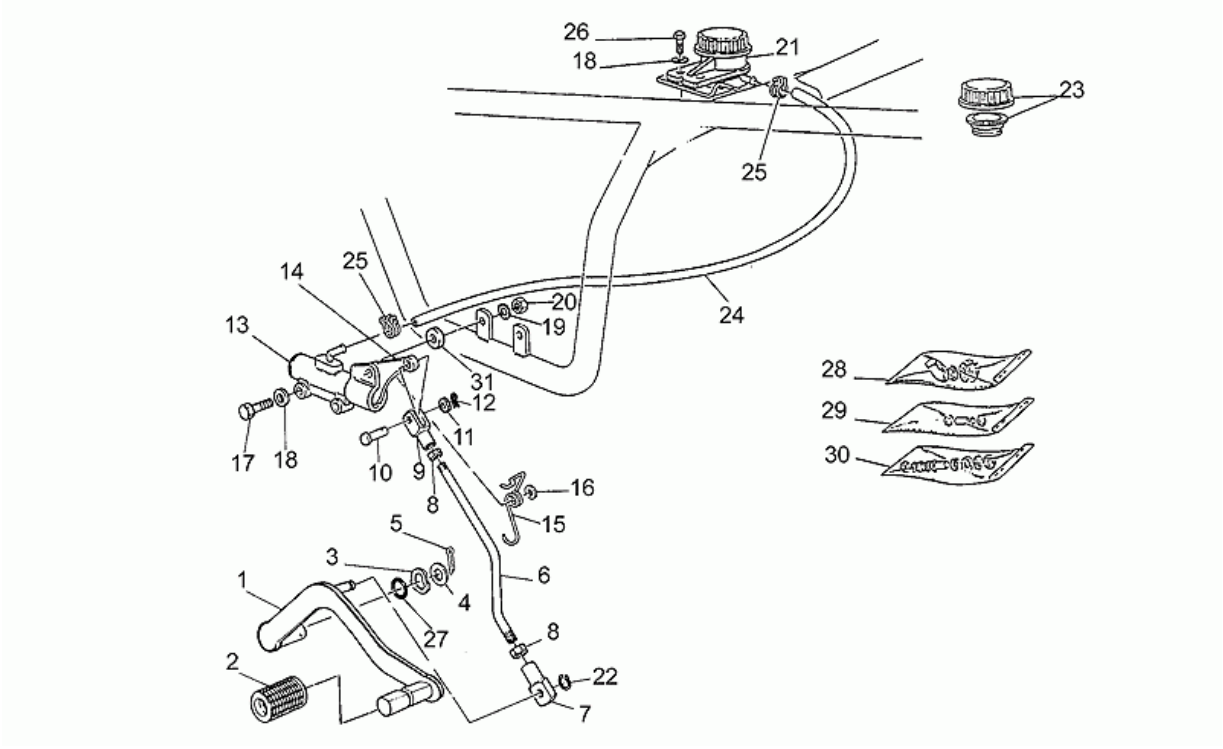

Pos.	Code	Description	Quant	Variants
1	GU31677060	Levier de frein AR	1	
2	GU14251001	Caoutchouc	1	
3	GU95129260	Rondelle élastique	1	
4	GU95004215	Rondelle plate	1	
5	GU95500227	Goupille	1	
6	GU31675280	Tirant	1	
7	GU18257551	Bloc	1	
8	GU92690073	Ecrou	1	
9	GU31626860	Fourchette	1	
10	GU95770265	Goupille	1	
11	GU95129110	Rondelle	1	
12	GU95500222	Goupille	1	
13	GU31666990	Maît.cyl. frein AR	1	
14	GU19667500	Levier de frein AR	1	
15	GU19667600	Ressort man.ferin ar.	1	
16	GU95004206	Rondelle 6,15x11x0,8	1	
17	GU98052330	Vis	2	
18	GU95000206	Rondelle	4	
19	GU95021106	Rondelle évent.	2	
20	GU92602206	Ecrou	2	
21	GU65663500	Réserv. huile freins	1	
22	GU90271008	Bague seeger	1	
23	GU17661052	Bouchon réservoir	1	
24	GU00823950050	Tuyau huile	1	
25	GU19157800	Collier	2	
26	GU98054316	Vis	2	
27	GU90706141	Joint torique	1	
28	GU19659500	Gr.révision raccordde pomp	1	

Groupe	CHASSIS
Code	33.18
Description	Pompe frein arrière
Révision	1

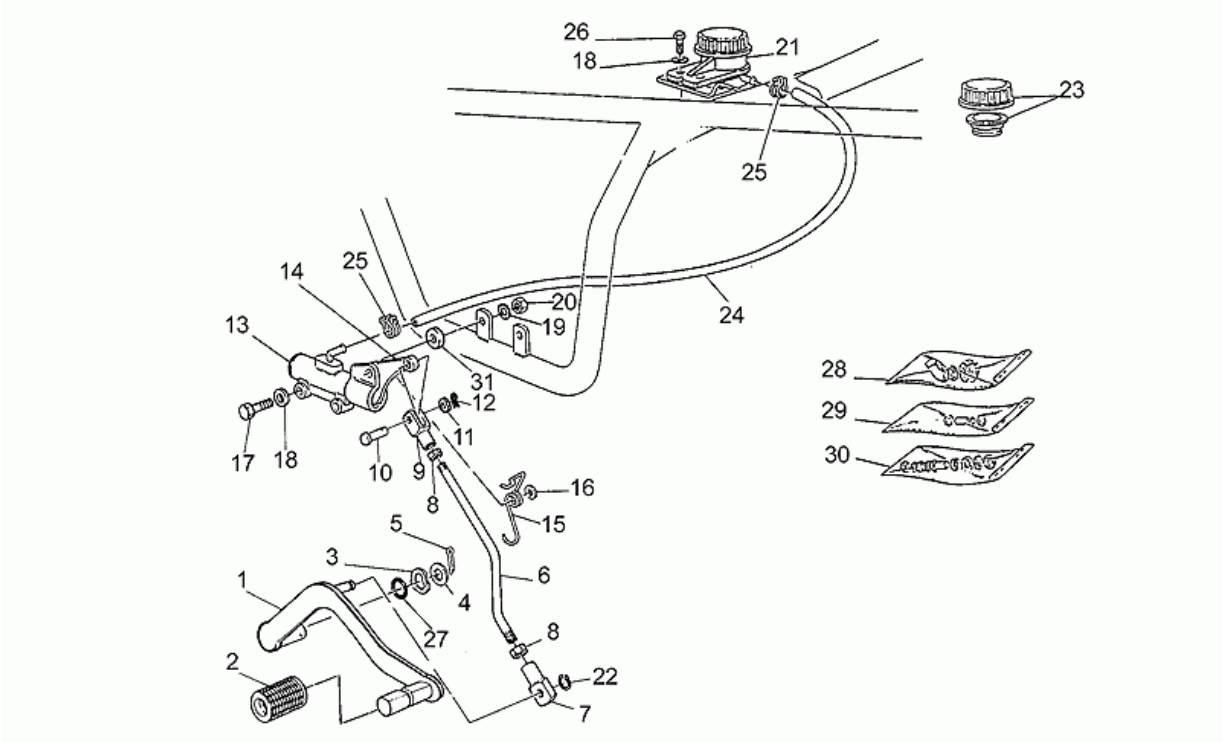

Pos.	Code	Description	Quant	Variants
29	GU19659600	Kit révision levier	1	
30	GU17659352	Kit rév. pompe AR	1	
31	GU91180605	Entretoise	2	

PIAGGIO&C.s.p.a.

Groupe	CHASSIS
Code	33.19
Description	Roue Av.
Révision	1

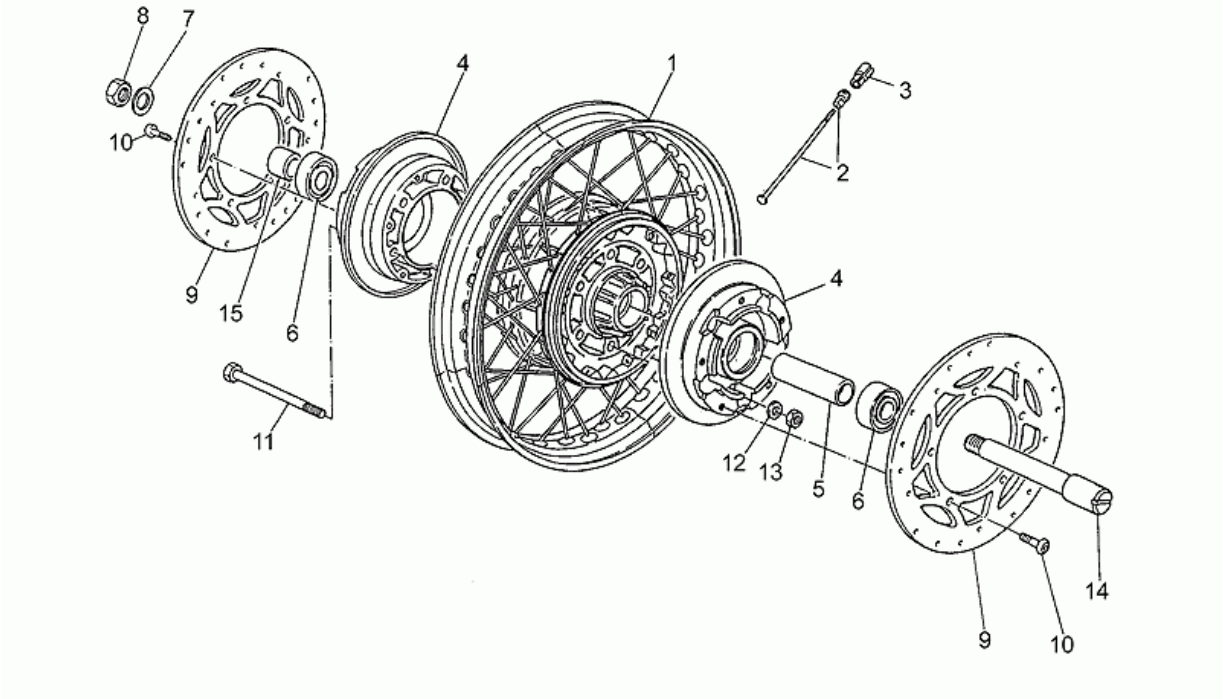

Pos.	Code	Description	Quant	Variants
1	GU31610360	Roue Av.	1	
2	GU39611601	Rayon	36	
3	GU27616110	Contrepoids 10 gr.	1	
3	GU27616111	Contrepoids 15 gr.	1	
3	GU27616112	Contrepoids 20 gr.	1	
3	GU27616113	Contrepoids 30 gr.	1	
4	GU31620360	Bride	2	
5	GU31615260	Entretoise roulements	1	
6	GU92204221	Roulement	2	
7	GU95004217	Rondelle 17X27X2	1	
8	GU92602516	Ecrou M16X1,5	1	
9	GU28613300	Disque frein	2	
10	GU98230825	Vis	10	
11	GU98052470	Vis	5	
12	GU14615901	Rondelle 8,4X13X0,8	5	
13	GU92630508	Ecrou	5	
14	GU31614160	Axe de roue AV	1	
15	GU31616360	Entretoise	2	

Groupe	CHASSIS
Code	33.20
Description	Roue arrière
Révision	1

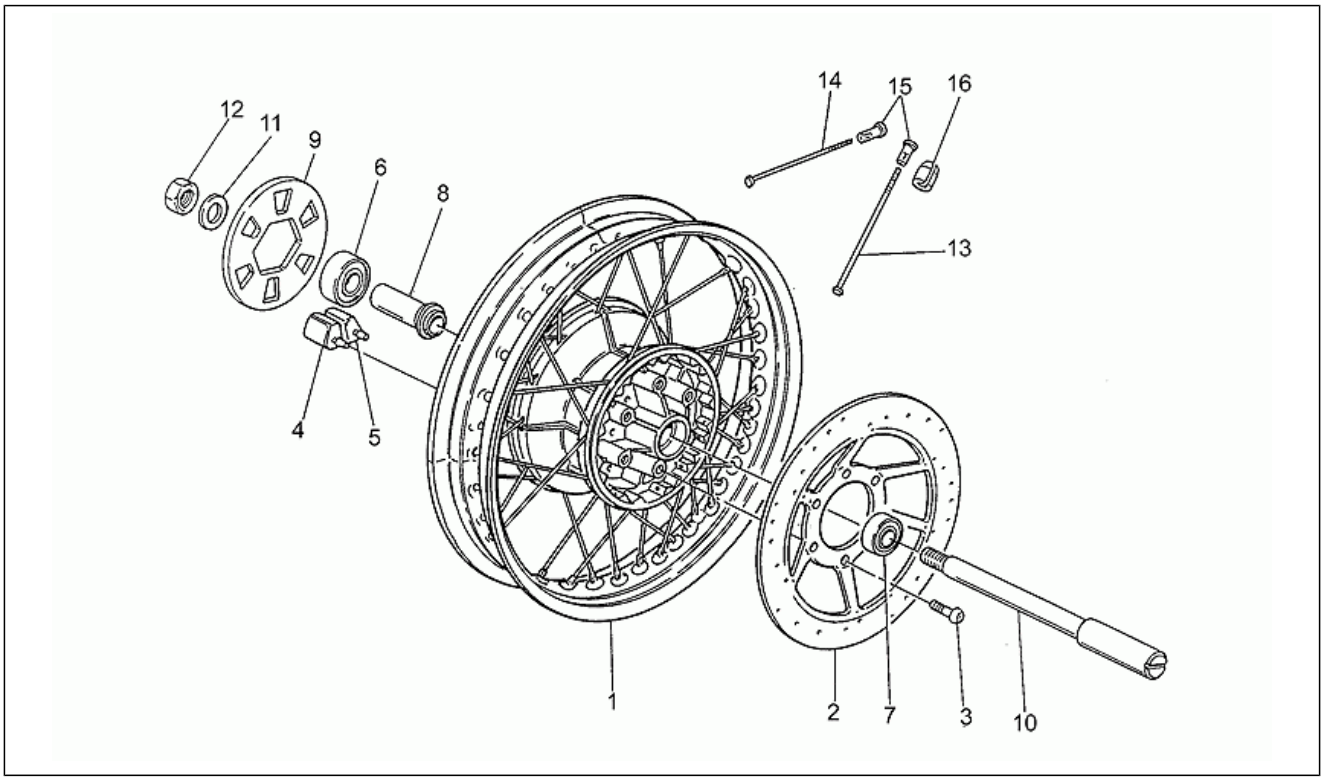

Pos.	Code	Description	Quant	Variants
1	GU23630370	Roue arrière	1	
2	GU31613335	Disque frein	1	
3	GU98230825	Vis	6	
4	GU19632501	Joint en caoutchouc d.	6	
5	GU19632502	Joint en caoutchouc g.	6	
6	GU92204218	Roulement	1	
7	GU92204217	Roulement	1	
8	GU27633910	Entretoise	1	
9	GU27356910	Entretoise	1	
10	GU31633330	Axe de roue AR	1	
11	GU14634400	Rondelle	1	
12	GU92602316	Ecrou M6x1,5	1	
13	GU23631470	Rayon long	18	
14	GU23631170	Rayon court	18	
15	GU27631250	Nipples	36	
16	GU27616110	Contrepoids 10 gr.	1	
16	GU27616111	Contrepoids 15 gr.	1	
16	GU27616112	Contrepoids 20 gr.	1	
16	GU27616113	Contrepoids 30 gr.	1	

Groupe	CHASSIS
Code	33.21
Description	Suspension avant/arriere
Révision	1

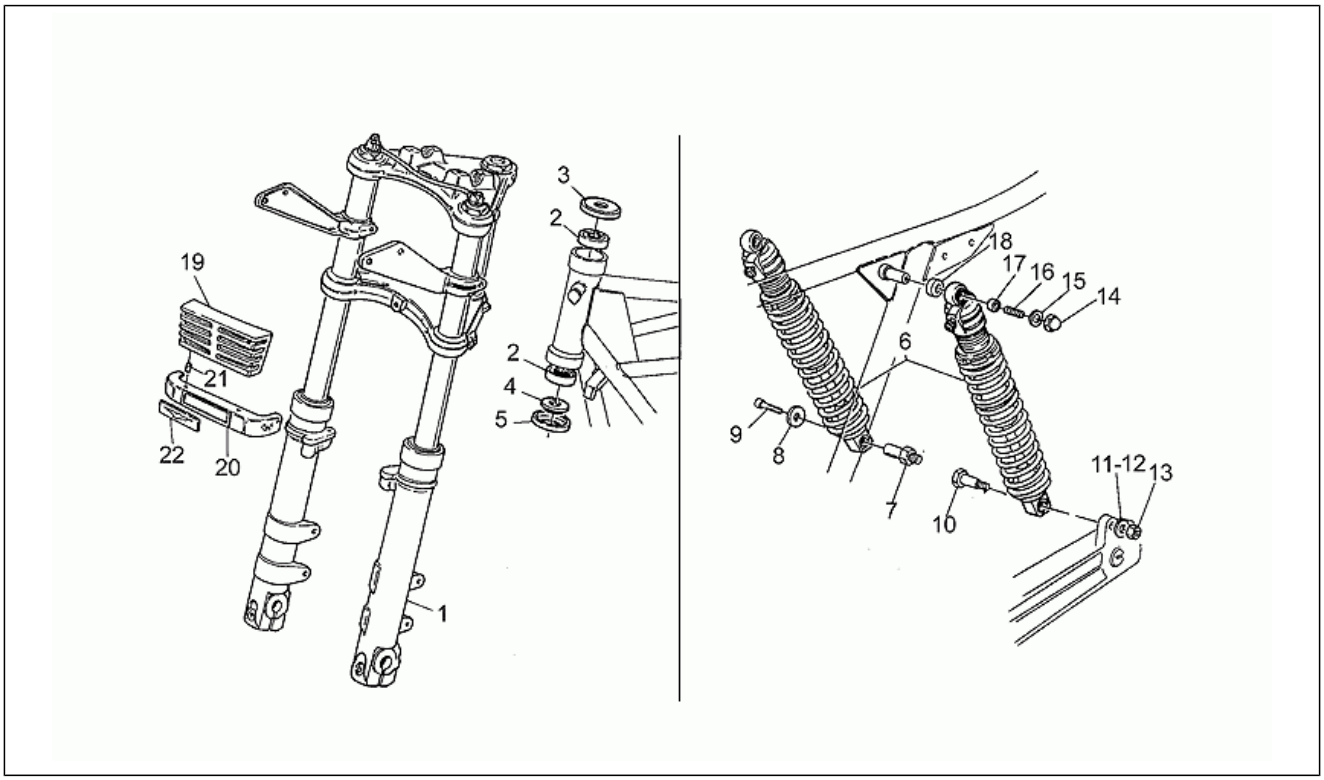

Pos.	Code	Description	Quant	Variants
1	GU31490280	Fourche AV cpl.	1	
2	GU92249225	Roulement roul.con.	2	
3	GU14494600	Rondelle	1	
4	GU14516700	Rondelle d'appui	1	
5	GU14517000	Pare-poussière	1	
6	GU31999262	Amortisseur-paire	2	**Spécifications techniques:**See spare parts comm.n.027 of 1998[02798N]
7	GU23555281	Pivot	1	
8	GU95100239	Rondelle	1	
9	GU98812416	Vis	1	
10	GU23555280	Pivot	1	
11	GU95129180	Rondelle 10,5X18X0,8	1	
12	GU95021110	Rondelle évent.	1	
13	GU92602411	Ecrou	1	
14	GU92781081	Ecrou	2	
15	GU95004208	Rondelle	2	
16	GU96508032	Vis sans tête	2	
17	GU91180804	Entretoise 8,5x12x4	2	
18	GU91181407	Entretoise	2	
19	GU23505810	Grille support clignotant	1	
20	GU23751310	Bride	1	
21	GU23922210	Pivot	2	
22	GU28769533	Plaquette marque adhésive	1	

Groupe	CHASSIS
Code	33.22
Description	Chassis
Révision	1

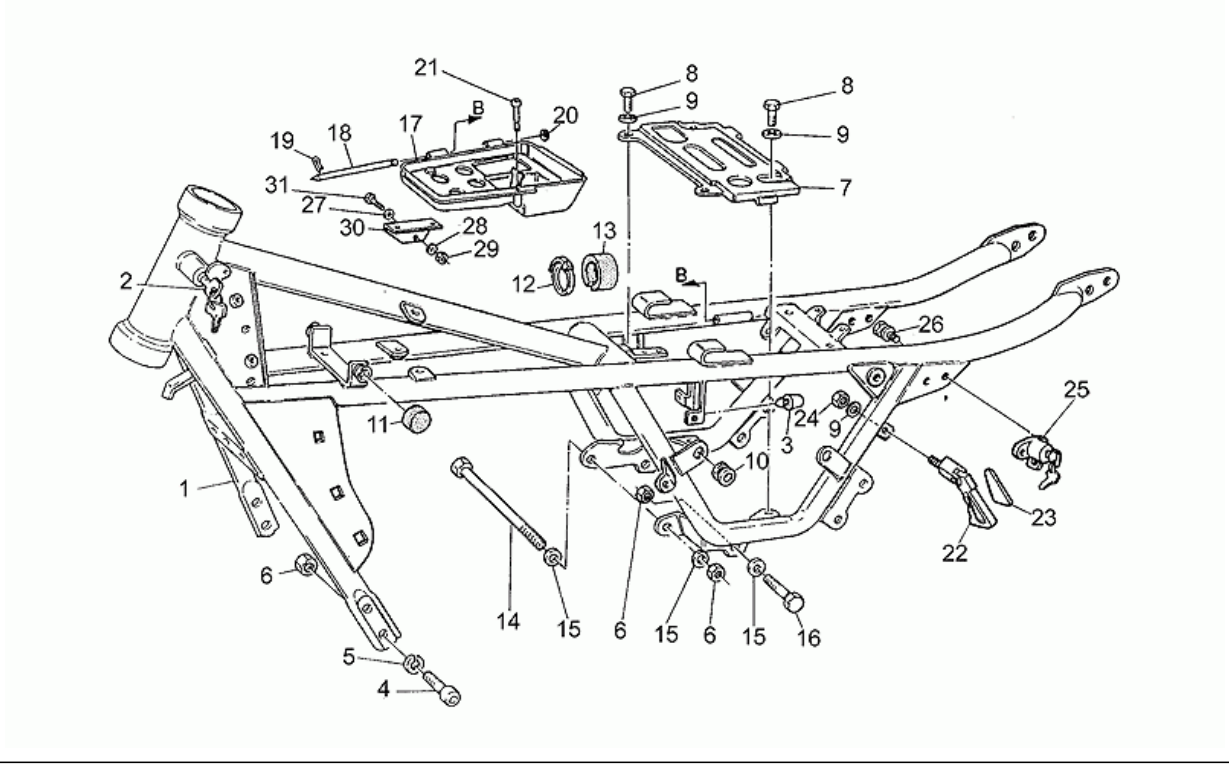

Pos.	Code	Description	Quant	Variants
1	GU31400160	Chassis	1	
2	GU19782520	Serrure	1	
3	GU19461650	Caoutchouc	2	
4	GU98622525	Vis 25 mm	4	
5	GU95120105	Rondelle	4	
6	GU92602210	Ecrou	6	
7	GU27418210	Plaque	1	
8	GU98054418	Vis	4	
9	GU95004208	Rondelle	5	
10	GU91551085	Caoutchouc	4	
11	GU39103400	Tampon	2	
12	GU14609650	Collier 3,6x20,6	2	
13	GU28109040	Tampon	2	
14	GU98110199	Pivot M10x205	1	
15	GU95004210	Rondelle 10,2x18x2	7	
16	GU98052555	Vis	2	
17	GU31479630	Cuve	1	
18	GU31479430	Pivot	1	
19	GU95401218	Goupille	1	
20	GU90280005	Rondelle de séreté	1	
21	GU98610230	Vis	1	
22	GU30464310	Poignée	1	
23	GU30920810	Décalcomanie	2	
24	GU92630108	Ecrou	1	
25	GU66466815	Serrure casque	1	
26	GU66468115	Vis à arrachement	2	
27	GU95100059	Rondelle 5,25x14x1,5	3	
28	GU95021105	Rondelle évent.	3	

Groupe	CHASSIS
Code	33.22
Description	Chassis
Révision	1

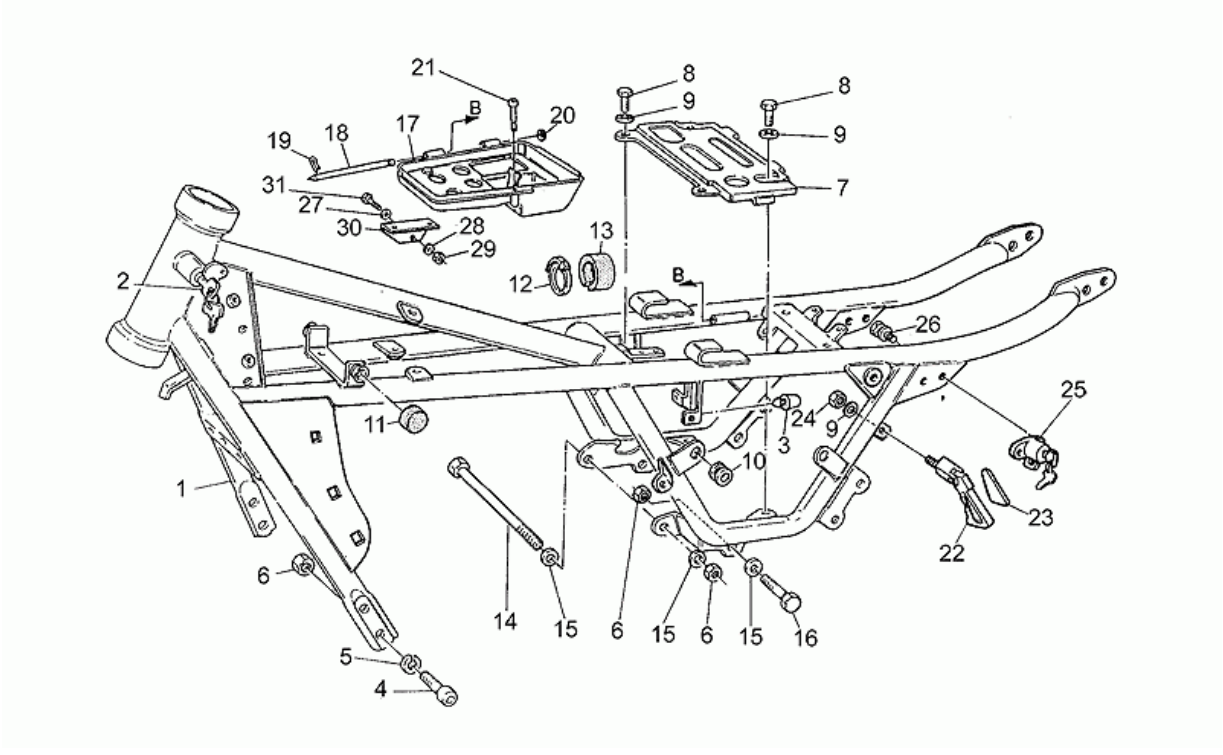

Pos.	Code	Description	Quant	Variants
29	GU92602205	Ecrou	3	
30	GU31749760	Plaquette	1	
31	GU98054210	Vis	1	

Groupe	CHASSIS
Code	33.24
Description	Alimentation
Révision	1

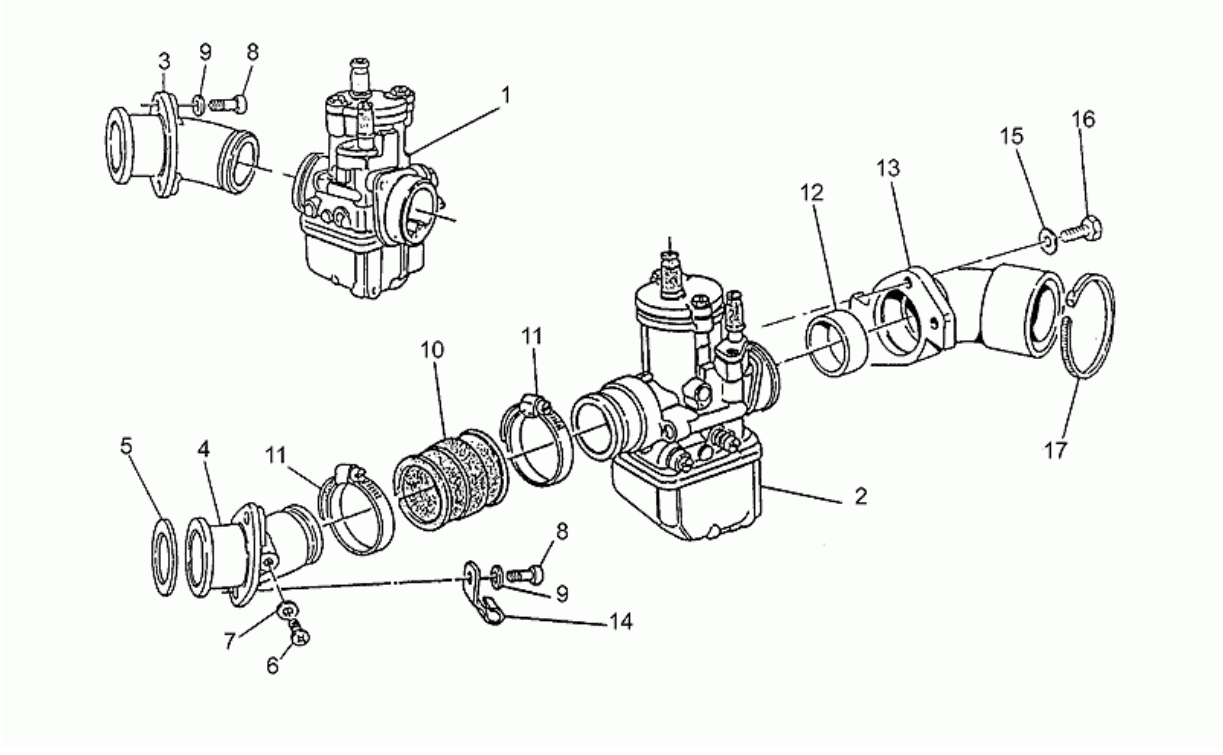

Pos.	Code	Description	Quant	Variants
1	GU31112680	Carburateur droit PHBH 28BD	1	
2	GU31112681	Carburateur gauche PHBH 28BS	1	
3	GU31115080	Collecteur aspiration dte	1	
4	GU31115081	Collecteur aspiration gche	1	
5	GU19115520	Joint	2	
6	GU98310610	Vis	2	
7	GU95100116	Rondelle 6,25x10x1,5	2	
8	GU98822325	Vis	4	
9	GU61013800	Rondelle spéciale	4	
10	GU31114380	Manchon	2	
11	GU93305032	Collier 32X52X8	4	
12	GU19114680	Bague d'étanchéité	2	
13	GU19114480	Collecteur	2	
14	GU19718000	Collier	2	
15	GU95004205	Rondelle	4	
16	GU98054220	Vis	4	
17	GU14609650	Collier 3,6x20,6	2	

Groupe	CHASSIS
Code	33.30
Description	Groupe echappement
Révision	1

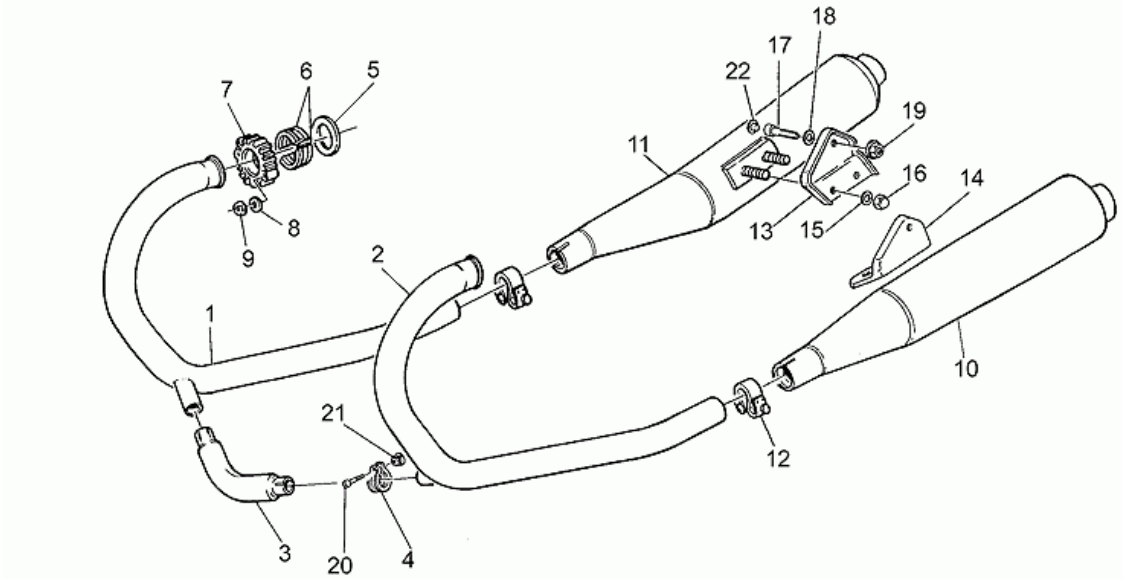

Pos.	Code	Description	Quant	Variants
1	GU31120780	Tuyau échappement d.	1	**Spécifications techniques:**See spare parts comm.n.018 of 1998[01898N], Order 31120782+31120783+31123981[O1]
1	GU31120782	Tuyau échappement d.	1	**Spécifications techniques:**See spare parts comm.n.018 of 1998[01898N], Second series[2A]
2	GU31120781	Tuyau échappement gche	1	**Spécifications techniques:**See spare parts comm.n.018 of 1998[01898N], Order 31120782+31120783+31123981[O1]
2	GU31120783	Tuyau échappement gche	1	**Spécifications techniques:**See spare parts comm.n.018 of 1998[01898N], Second series[2A]
3	GU31123980	Tuyau	1	**Spécifications techniques:**See spare parts comm.n.018 of 1998[01898N], Order 31120782+31120783+31123981[O1]
4	GU31126960	Collier	2	
5	GU19025280	Joint	2	
6	GU19025460	Entretoise	4	
7	GU19121050	Bague échappement	2	
8	GU61013800	Rondelle spéciale	4	
9	GU92701062	Ecrou	4	
10	GU31122960	Silencieux D	1	**Spécifications techniques:**See technical comm.n.319 del 1996[31996C]
11	GU31123060	Silencieux G	1	**Spécifications techniques:**See technical comm.n.319 del 1996[31996C]
12	GU31123460	Collier	2	
13	GU31128660	Plaque d.	1	
14	GU31128760	Plaque g.	1	
15	GU61270300	Rondelle élastique 8x15x0,3	6	
16	GU92781081	Ecrou	4	
17	GU98622420	Vis	2	
18	GU14615901	Rondelle 8,4X13X0,8	2	
19	GU92660008	Ecrou	2	
20	GU61127520	Vis	2	
21	GU61127220	Bague	2	

Groupe	CHASSIS
Code	33.30
Description	Groupe echappement
Révision	1

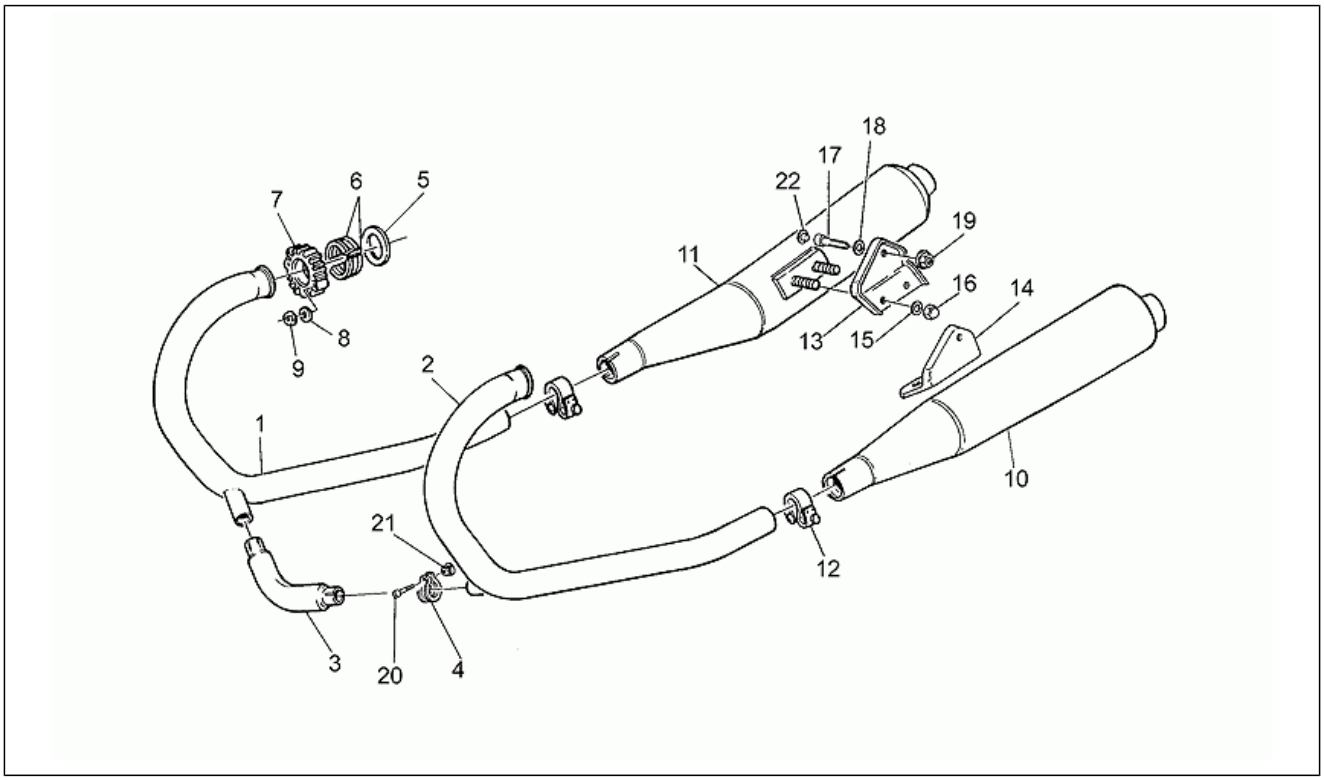

Pos.	Code	Description	Quant	Variants
22	GU23943410	Bouchon	2	

Groupe	CHASSIS
Code	33.32
Description	Levier boîte de vitesses
Révision	1

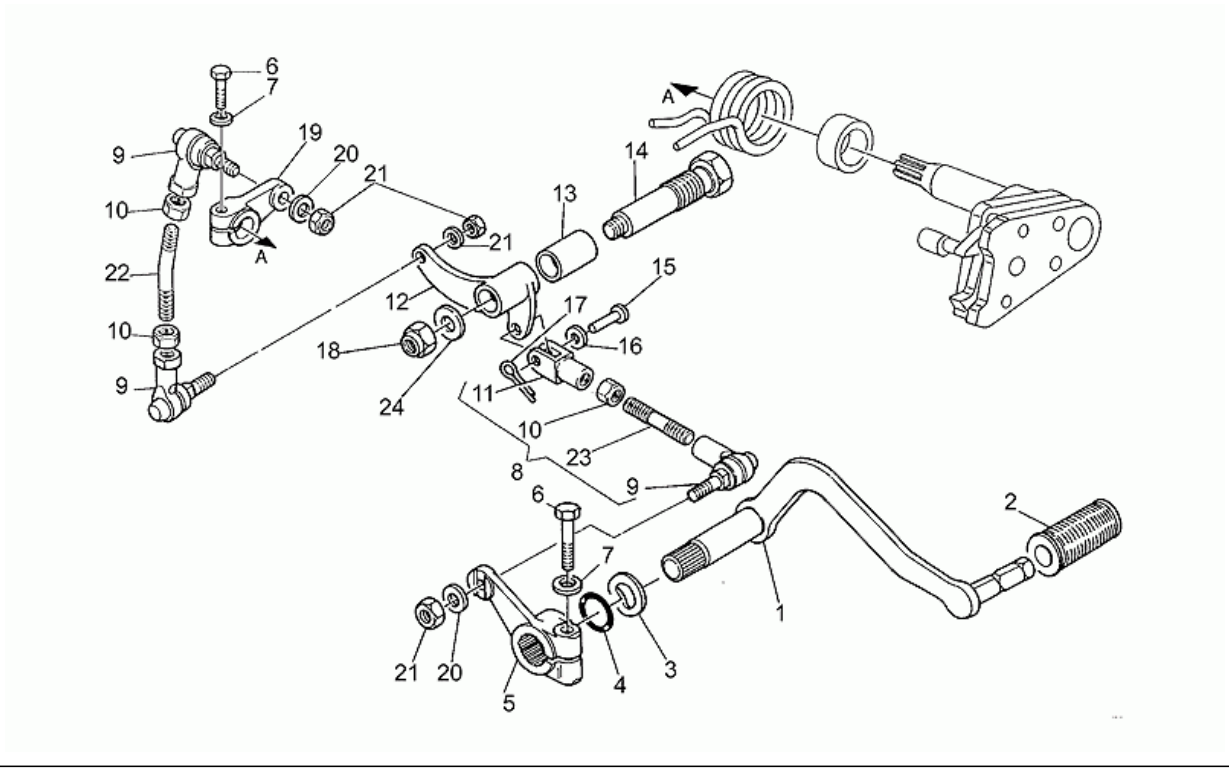

Pos.	Code	Description	Quant	Variants
1	GU31250960	Levier boîte de vitesses	1	
2	GU14251001	Caoutchouc	1	
3	GU95129260	Rondelle élastique	1	
4	GU90706141	Joint torique	2	
5	GU28256960	Levier	1	
6	GU98052325	Vis	2	
7	GU95021106	Rondelle évent.	2	
8	GU31257880	Tige renvoi boîte de vitesses	1	
9	GU28258160	Fourchette	3	
10	GU92602206	Ecrou	4	
11	GU31626880	Fourchette	1	
12	GU31256960	Levier	1	
13	GU17252050	Bague	1	
14	GU31252360	Pivot	1	
15	GU95770265	Goupille	1	
16	GU95129110	Rondelle	1	
17	GU95500222	Goupille	1	
18	GU92630508	Ecrou	1	
19	GU19258220	Levier de commande	1	
20	GU61013800	Rondelle spéciale	3	
21	GU92630106	Ecrou M6x1	3	
22	GU18257950	Tirant	1	
23	GU96506040	Tige renvoi boîte de vitesses	1	
24	GU95021108	Rondelle élastique	1	

Groupe	MOTEUR
Code	34.23
Description	Arbre moteur
Révision	1

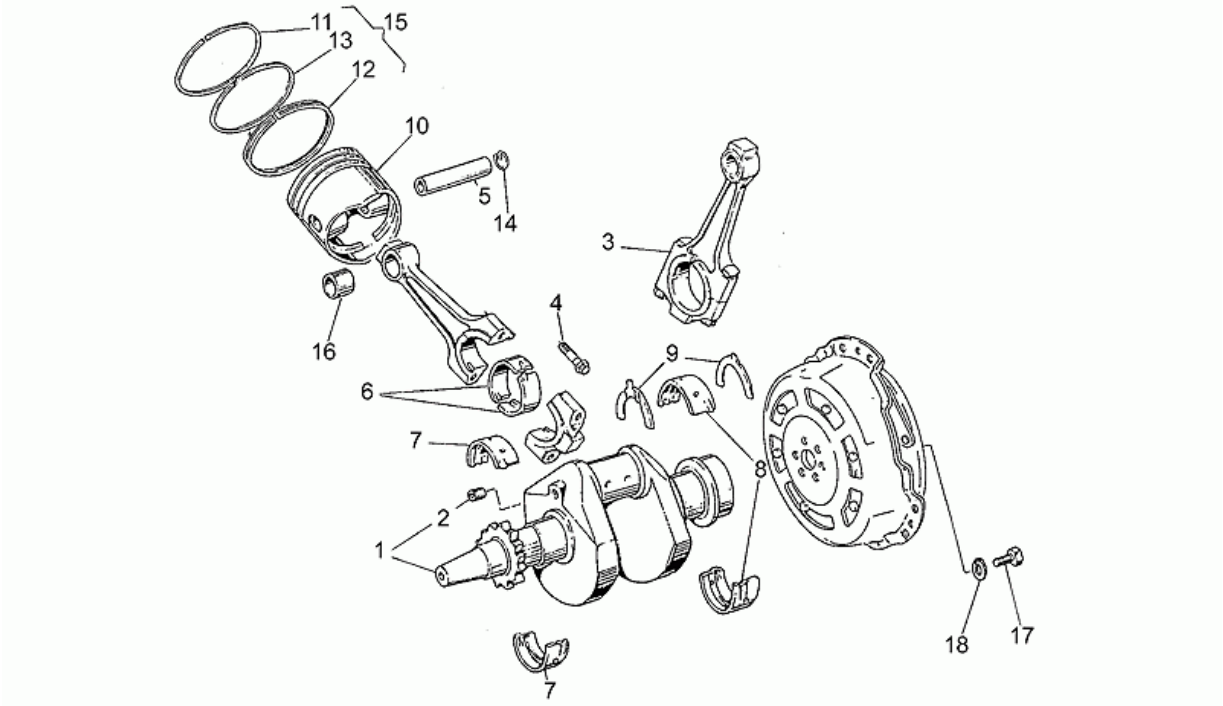

Pos.	Code	Description	Quant	Variants
1	GU19064121	Arbre moteur cpl.	1	
2	GU19065400	Bouchon	1	
3	GU19061521	Bielle	2	
4	GU19062221	Vis	4	
5	GU19061220	Axe	2	
6	GU19062022	Demi-coussinet	4	
7	GU19065623	Demi-couss.de vilebr.av.	2	
8	GU19066522	Demi-couss.de vilebr.ar.	2	
9	GU31066480	Butée	2	
10	GU31060480	Piston	2	
11	GU19060700	Segment d'étanchéité	2	
12	GU19061000	Segment d'étanchéité	2	
13	GU27060820	Segment d'étanchéité	2	
14	GU19061320	Bague de butée	4	
15	GU31060680	Segments - série	2	
16	GU19061821	Bague	2	
17	GU19067700	Vis	6	
18	GU14615901	Rondelle 8,4X13X0,8	6	

Groupe	MOTEUR
Code	34.25
Description	Boîte de vitesses
Révision	1

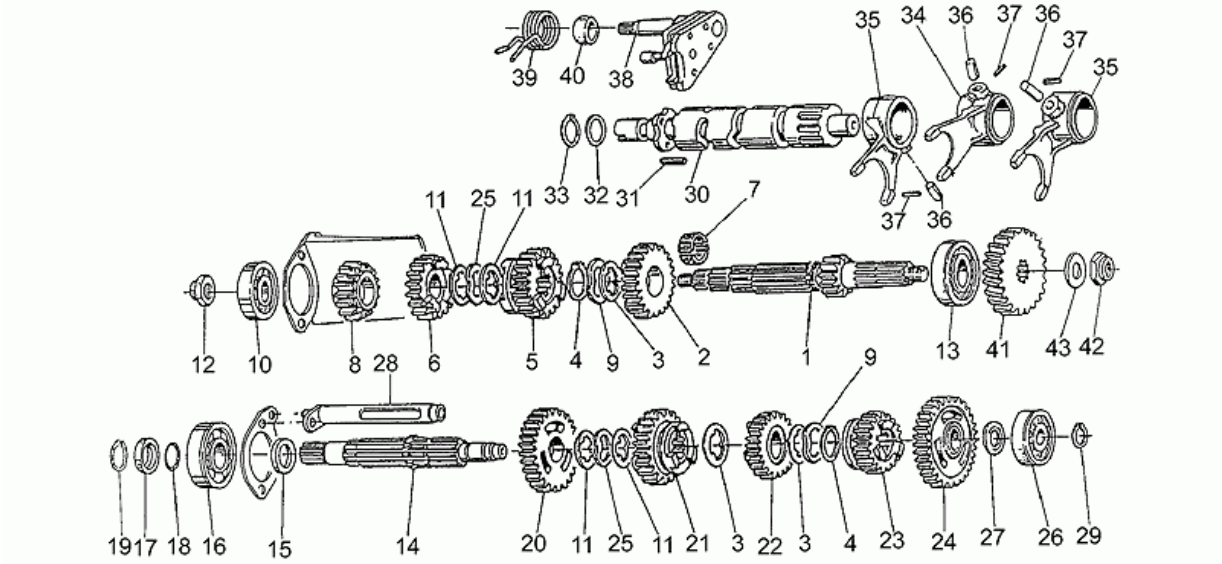

Pos.	Code	Description	Quant	Variants
1	GU23210570	Arbre primaire Z=11	1	
2	GU23212070	Engrenage 5a AP Z=20	1	
3	GU19215460	Rondelle éventail	3	
4	GU90271127	Bague seeger	2	
5	GU19211861	Engrenage 4a AP Z=18	1	
6	GU19211460	Engrenage 3a AP Z=18	1	
7	GU92251023	Cage à rouleaux	1	
8	GU19211361	Engrenage 2a AP Z=14	1	
9	GU19218062	Rondelle	2	
10	GU92218417	Roulement AP 17x40x17,5	1	
11	GU19214660	Rondelle d'appui	4	
12	GU10054100	Ecrou	1	
13	GU92230320	Roulement AP 20x37x17	1	
14	GU19213661	Arbre secondaire	1	
15	GU19212900	Entretoise	1	
16	GU92201220	Roulement 20X47X14	1	
17	GU19213720	Entretoise	1	
18	GU90706188	Bague d'étanchéité 18,77X1,78	1	
19	GU90271121	Bague seeger	1	
20	GU23214571	Engrenage 2a AS Z=23	1	
21	GU19214860	Engrenage 3a AS Z=23	1	
22	GU19215161	Engrenage 4a AS Z=19	1	
23	GU23215270	Engrenage 5a AS Z=18	1	
24	GU23214071	Engrenage 1a AS Z=26	1	
25	GU19218061	Rondelle	2	
26	GU92234716	Roulement	1	
27	GU10214301	Cale 1,7 mm	1	
27	GU10214302	Cale 1,8 mm	1	

Groupe	MOTEUR
Code	34.25
Description	Boîte de vitesses
Révision	1

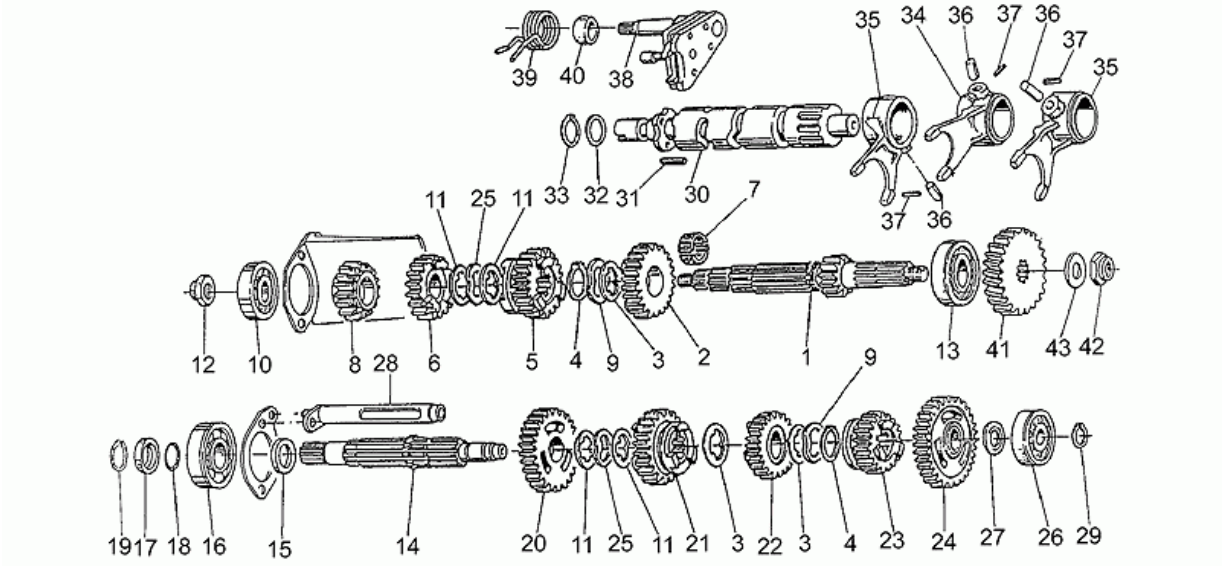

Pos.	Code	Description	Quant	Variants
27	GU10214303	Cale 1,9 mm	1	
27	GU10214304	Rondelle 2 mm	1	
27	GU10214305	Cale 2,1 mm	1	
28	GU23202074	Egouttoir	1	
29	GU90271117	Bague seeger	1	
30	GU19234420	Desmodromique	1	
31	GU19234600	Tige	4	
32	GU19355300	Cale 1 mm	1	
33	GU90271020	Anneau élastique	1	
34	GU19231220	Fourchette AP	1	
35	GU19231020	Fourchette AS	2	
36	GU92297909	Rouleau	3	
37	GU95520316	Goupille	3	
38	GU20999520	Kit présélecteur	1	**Spécifications techniques:**See spare parts comm.n.013 of 1997[01397N]
39	GU28238261	Ressort	1	**Spécifications techniques:**See spare parts comm.n.013 of 1997[01397N], Second series[2A]
39	GU61238200	Ressort	1	**Spécifications techniques:**First series[1A]
40	GU20208520	Entretoise	1	**Spécifications techniques:**See spare parts comm.n.013 of 1997[01397N], Second series[2A]
40	GU91182010	Bague	1	**Spécifications techniques:**First series[1A]
41	GU19211120	Engrenage Z=24	1	
42	GU10054100	Ecrou	1	
43	GU39238100	Rondelle d'appui	1	

Groupe	MOTEUR
Code	34.26
Description	Carburateurs
Révision	1

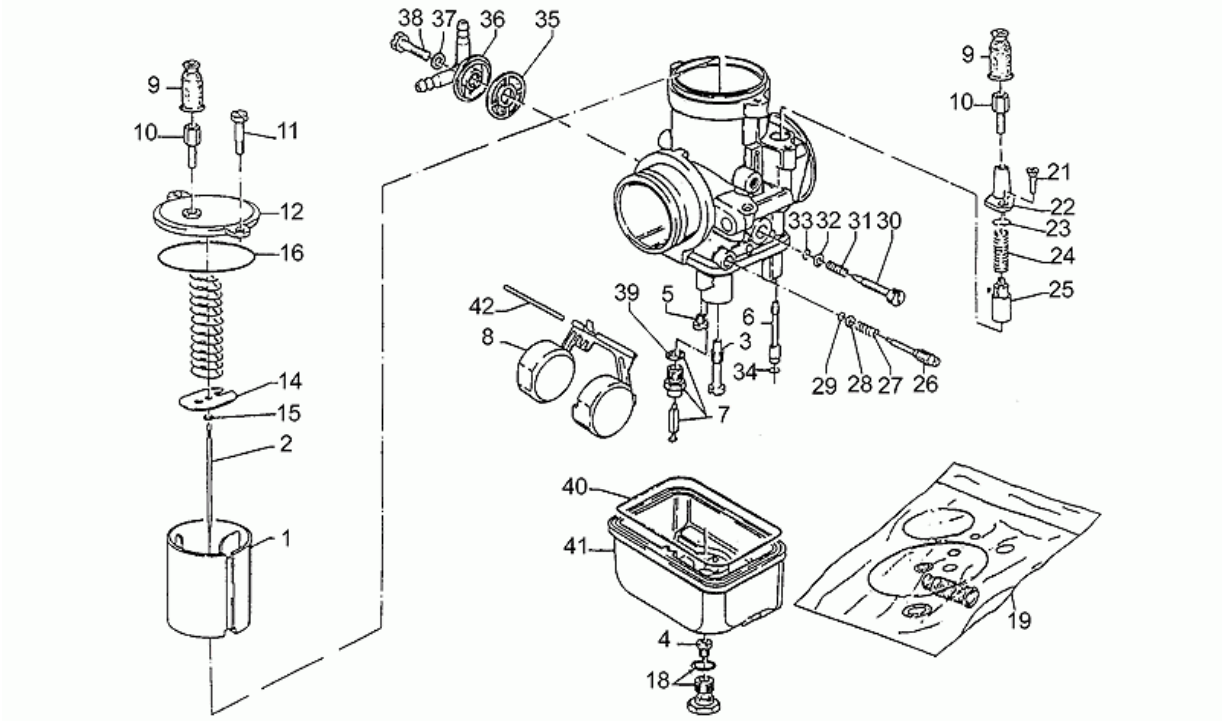

Pos.	Code	Description	Quant	Variants
1	GU27934820	Soupape gaz 30	2	
2	GU31937780	Pointeau conique X57	2	
3	GU27935521	Gicleur 262H	2	
4	GU19935750	Jet maximum 105	2	
5	GU23935910	Gicleur minimum 42	2	
6	GU19936000	Jet démarrage 60	2	
7	GU19934600	Vanne pointeau	2	
8	GU27934315	Flotteur gr.9,5	2	
9	0000000	Pneu s. chambre 110/90"	4	
10	GU12937200	Vis tendeur de fil	4	
11	GU14934650	Vis	2	
12	GU19935080	Couvercle	2	
14	GU19938580	Plaquette	2	
15	GU65933600	Agrafe pointeau conique	2	
16	0000000	Pneu s. chambre 110/90"	2	
18	GU27933720	Bouchon fix.bac	2	
19	GU19939980	Jeu de joints	1	
21	GU13937900	Vis	2	
22	GU17937450	Couvercle dispositif dém.	2	
23	0000000	Pneu s. chambre 110/90"	2	
24	GU39937600	Ressort de soupape	2	
25	GU13937800	Soupape de démarrage	2	
26	GU13936200	Vis réglage minimum	2	
27	GU13936300	Ressort	2	
28	GU65933700	Rondelle plate	2	
29	0000000	Pneu s. chambre 110/90"	2	
30	GU13936600	Vis réglage soupape gaz	2	
31	GU13936700	Ressort	2	

Groupe	MOTEUR
Code	34.26
Description	Carburateurs
Révision	1

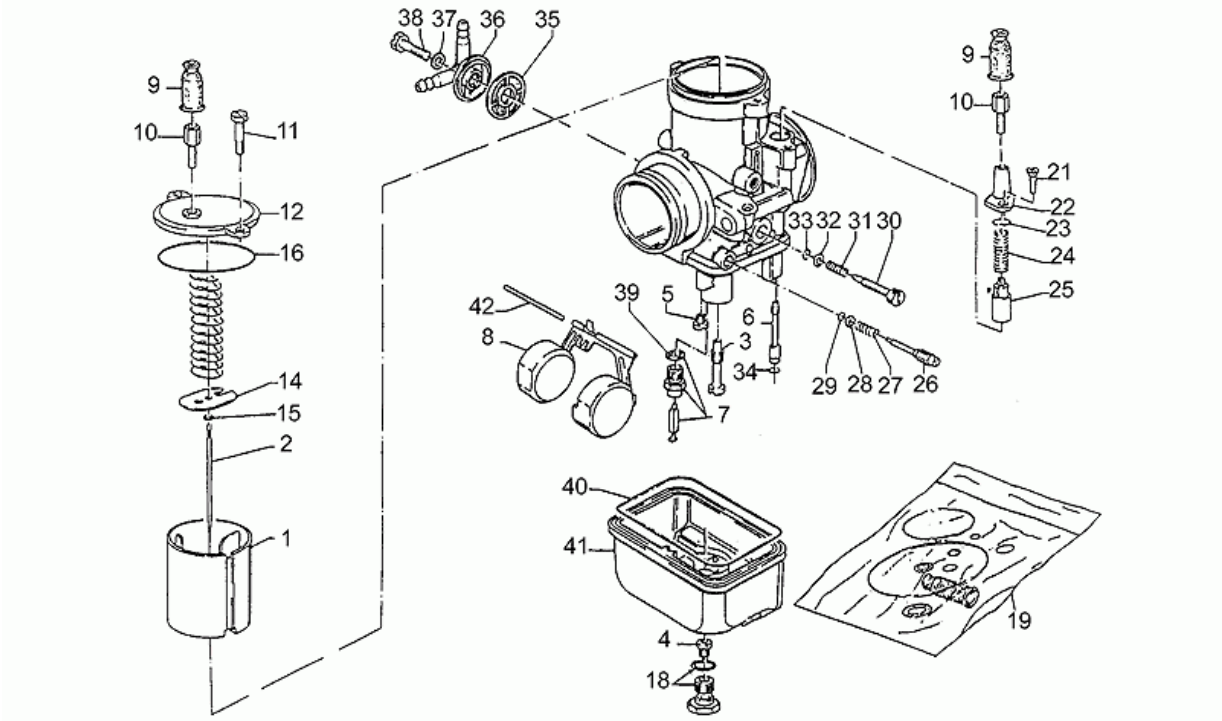

Pos.	Code	Description	Quant	Variants
32	GU14931650	Rondelle plate	2	
33	0000000	Pneu s. chambre 110/90"	2	
34	0000000	Pneu s. chambre 110/90"	2	
35	GU43934000	Filtre essence	2	
36	GU31934680	Pipette racc. tuyau essence	2	
37	GU13934700	Joint vis	2	
38	GU10934900	Vis fix.pipette	2	
39	0000000	Pneu s. chambre 110/90"	2	
40	0000000	Pneu s. chambre 110/90"	2	
41	GU19934480	Cuve aluminium	2	
41	GU31934460	Cuve plastica	2	**Spécifications techniques:**See spare parts comm.n.033 of 1999[03399N]
42	GU13933100	Axe flotteur	2	

Groupe	MOTEUR
Code	34.27
Description	Carter moteur
Révision	1

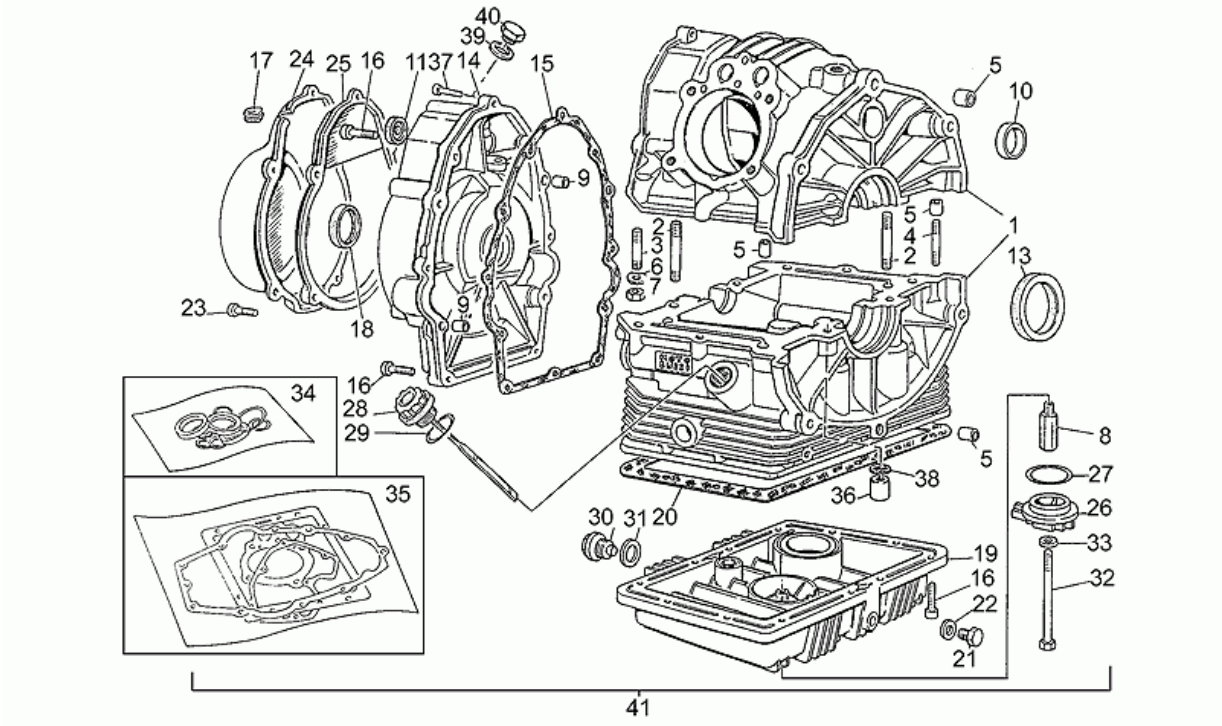

Pos.	Code	Description	Quant	Variants
1	GU31000380	Carter moteur grise	1	
2	GU96451560	Vis sans tête	4	
3	GU96451430	Vis sans tête	4	
4	GU96508055	Vis sans tête	2	
5	GU19015020	Bague	4	
6	GU61270300	Rondelle élastique 8x15x0,3	6	
7	GU92602208	Ecrou	6	
8	GU19003800	Raccord	1	
9	GU19002020	Bague 6,6x9x13	2	
10	GU19016320	Bouchon	1	
11	GU90401530	Bague d'étanchéité	1	
13	GU04000500	Bague d'étanchéité	1	**Spécifications techniques:**From engine PC053625[M2]
13	GU90405367	Bague d'étanchéité	1	**Spécifications techniques:**Up to engine number <PC053624[M1]
14	GU19001460	Couvercle distribut. gris	1	
15	GU19001200	Joint	1	
16	GU98622325	Vis	22	
17	GU19007700	Caoutchouc	1	
18	GU90402840	Bague d'étanchéité 28x38x7	1	
19	GU27003585	Carter huile moteur brut	1	
20	GU19003602	Joint	1	
21	GU31003766	Bouchon vid.huile M10x1	1	
22	GU10528900	Garniture	1	
23	GU98620335	Vis M6x35	5	
24	GU27001636	Couvercle	1	
25	GU27001136	Bride	1	
26	GU19003400	Couvercle brut	1	
27	GU90706444	Joint torique	1	

Groupe	MOTEUR
Code	34.27
Description	Carter moteur
Révision	1

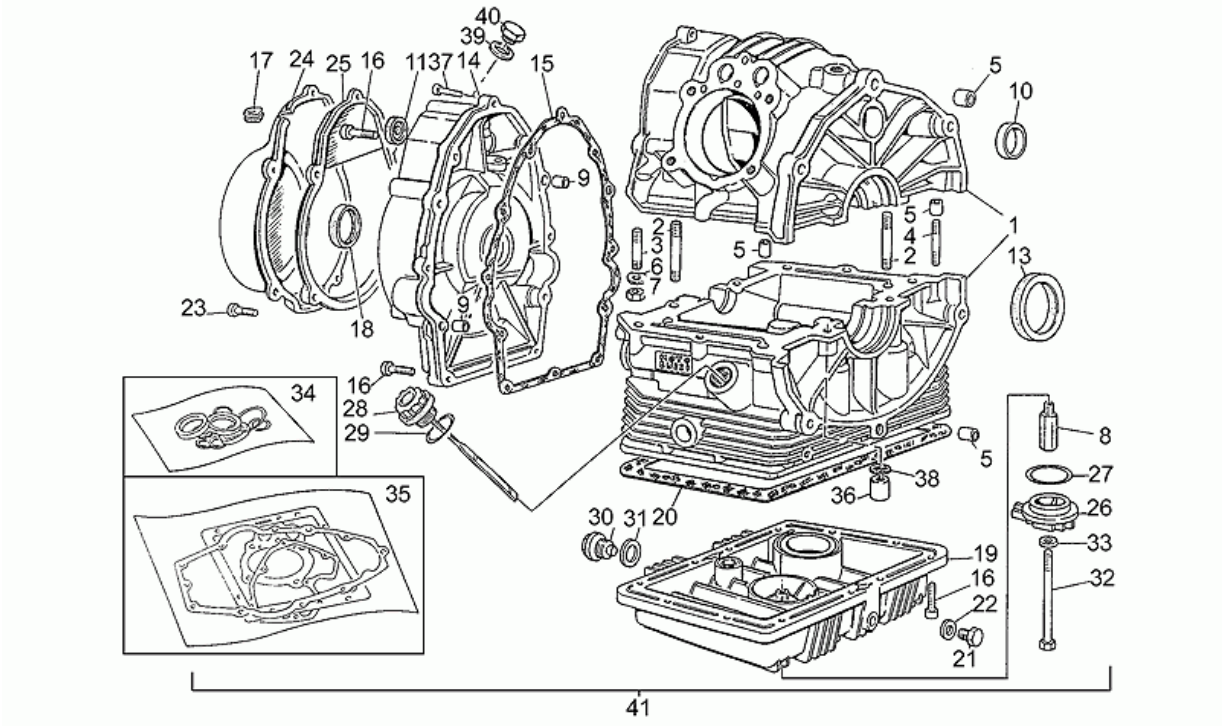

Pos.	Code	Description	Quant	Variants
28	GU27004985	Bouchon rempl. huile	1	
29	GU90706282	Bague d'étanchéité	1	
30	GU12003702	Bouchon vid.huile	1	
31	GU95100709	Joint 20,1x28x2	1	
32	GU27152885	Boulon	1	
33	GU12154200	Joint 8,25x15x1	1	
34	GU19999580	Joint spy-série	1	
35	GU19999021	Joints moteur-série	1	
36	GU13021900	Ecrou colonne	4	
37	GU98620330	Vis	2	
38	GU95129180	Rondelle 10,5X18X0,8	4	
39	GU10154200	Joint	1	
40	GU95980119	Bouchon	1	
41	GU31991080	Moteur sans boîte de v. MOTOPLAT	1	

Groupe	MOTEUR
Code	34.28
Description	Distribution
Révision	1

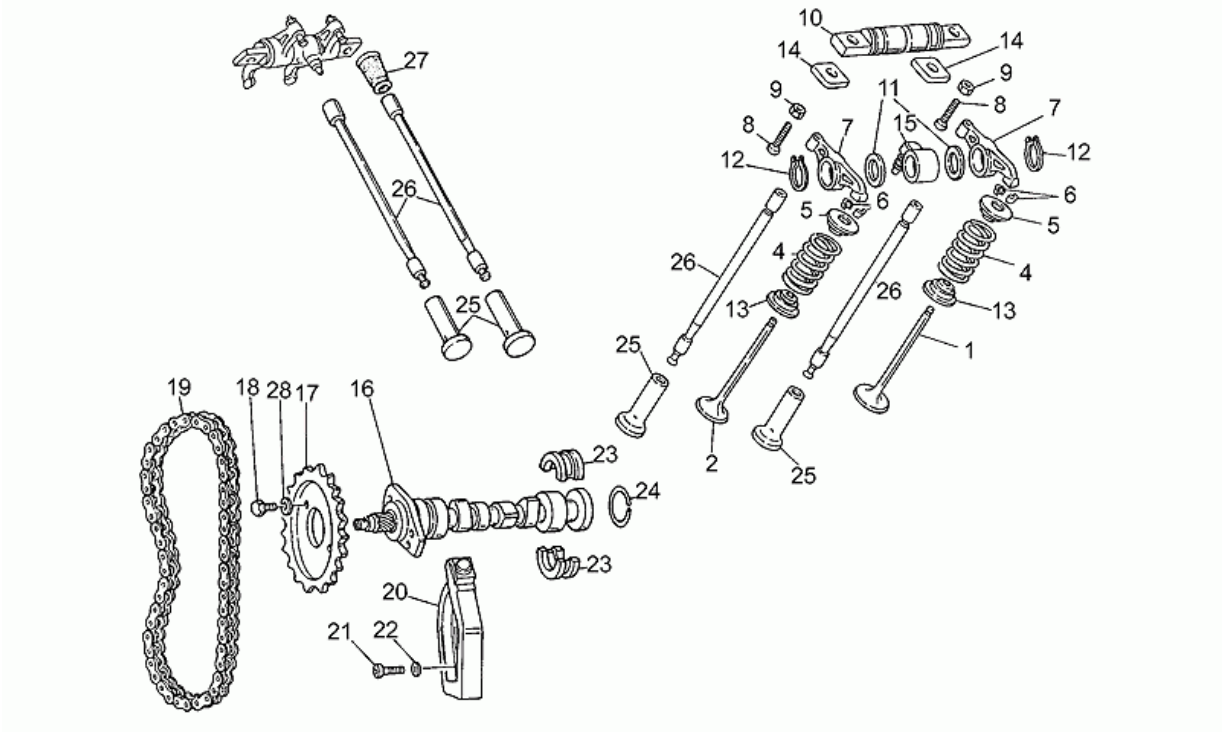

Pos.	Code	Description	Quant	Variants
1	GU19036021	Soupape d'admission	2	
2	GU23036100	Soupape d'échappement	2	
4	GU27037521	Ressort	4	
5	GU31038015	Coupelle supérieur	4	
6	GU61038100	Demi-clavette	8	
7	GU19030500	Culbuteur	4	
8	GU19034000	Vis	4	
9	GU92602406	Ecrou M6x1	4	
10	GU19032000	Axe culbuteur	2	
11	GU19032300	Rondelle d'appui	4	
12	GU90271018	Bague seeger	4	
13	GU31037015	Coupelle inférieure	4	
14	GU19032980	Cale	4	
15	GU19027500	Manchon	2	
16	GU27053463	Arbre à cames	1	
17	GU19054521	Engrenage distribution	1	
18	GU61054900	Boulon	2	
19	GU19058021	Chaîne de distribution	1	
20	GU19058220	Tendeur de chaine	1	
21	GU98822316	Vis	1	
22	GU95129115	Rondelle	1	
23	GU19055700	Secteur	2	
24	GU90353029	Anneau élastique	1	
25	GU19045861	Poussoir	4	
26	GU19045020	Culbuteur tige	4	
27	GU27045420	Capuchon	4	
28	GU23217800	Rondelle de séreté	2	

Groupe	MOTEUR
Code	34.29
Description	Embrayage
Révision	1

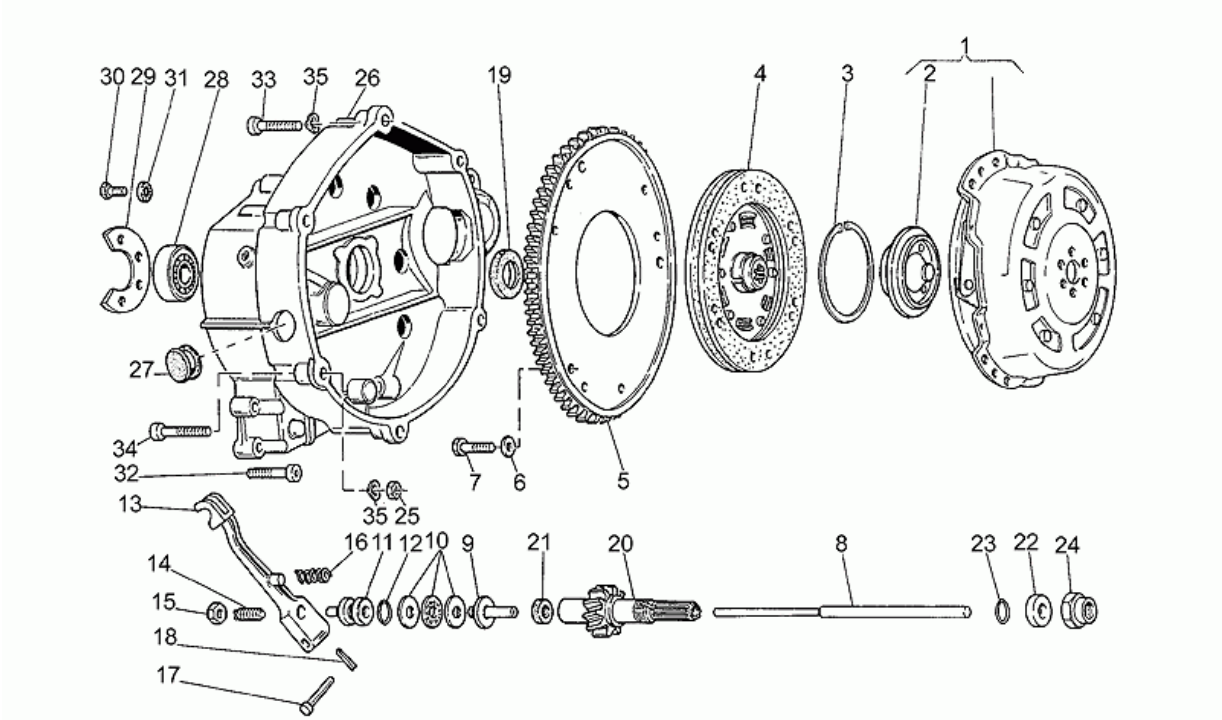

Pos.	Code	Description	Quant	Variants
1	GU19080161	Commande embrayage	1	
2	GU19083462	Cuvette	1	
3	GU90272075	Anneau élastique	1	
4	GU27084460	Disque embrayage mené	1	
5	GU19067900	Couronne MOTOPLAT	1	
6	GU14217901	Rondelle 6,4x10x0,7	6	
7	GU98054316	Vis	6	
8	GU20085720	Tige	1	
9	GU14086000	Corps intérieur	1	
10	GU12087001	Palier poussée	1	
11	GU14086100	Corps extérieur	1	
12	GU90706170	Joint torique 17,13x2,62	1	
13	GU14090201	Débrayage	1	
14	GU14090400	Vis embrayage	1	
15	GU92602508	Ecrou M8x1	1	
16	GU94321105	Retour levier démarrage	1	
17	GU95780271	Goupille 7x39	1	
18	GU95500222	Goupille	1	
19	GU90403245	Bague d'étanchéité	1	
20	GU31210780	Arbre trnsmission Z=13	1	
21	GU90400616	Bague d'étanchéité 6x16x7	1	
22	GU19213760	Entretoise	1	
23	GU90706235	Joint torique 23,52x1,78	1	
24	GU19356760	Ecrou	1	
25	GU92602208	Ecrou	1	
26	GU19200462	Cloche embrayage	1	
27	GU93180220	Bouchon	1	
28	GU92201225	Roulement 25x52x15	1	

Groupe	MOTEUR
Code	34.29
Description	Embrayage
Révision	1

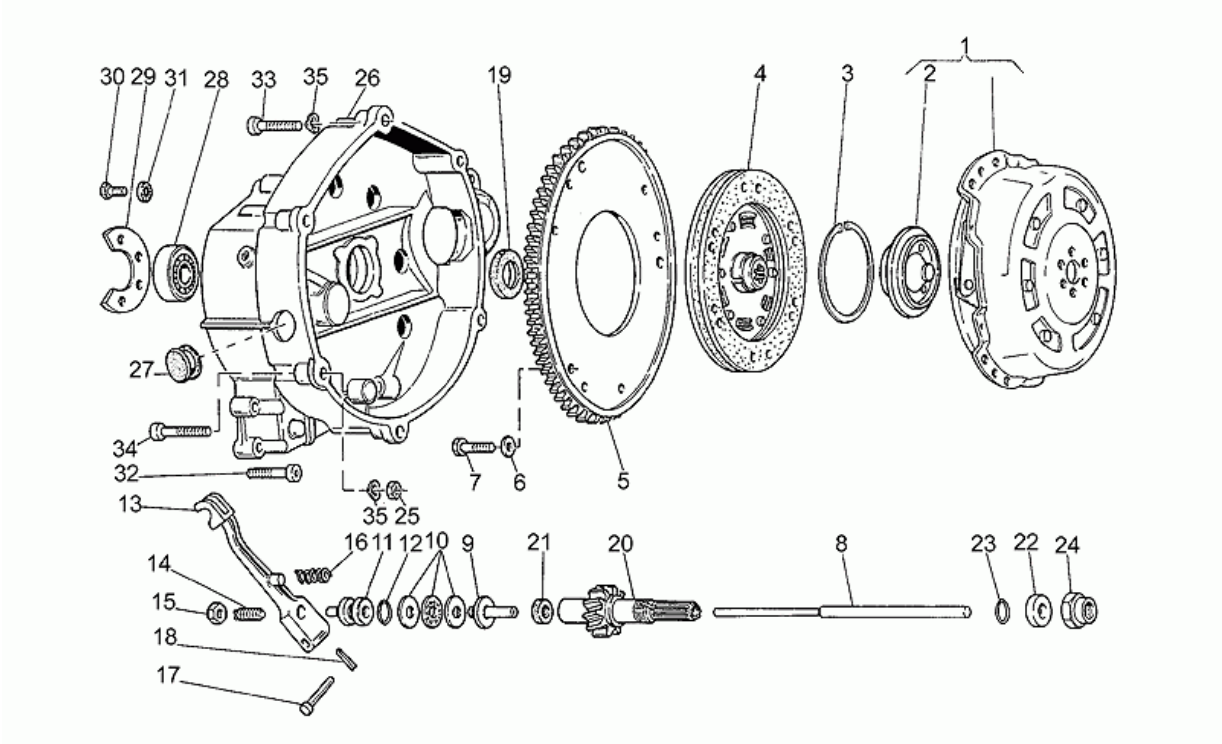

Pos.	Code	Description	Quant	Variants
29	GU19203460	Plaque fixation palier	1	
30	GU98054314	Vis	3	
31	GU14217901	Rondelle 6,4x10x0,7	3	
32	GU98620330	Vis	11	
33	GU98620435	Vis	5	
34	GU98620450	Vis	1	
35	GU61270300	Rondelle élastique 8x15x0,3	6	

Groupe	MOTEUR
Code	34.31
Description	Démarreur
Révision	1

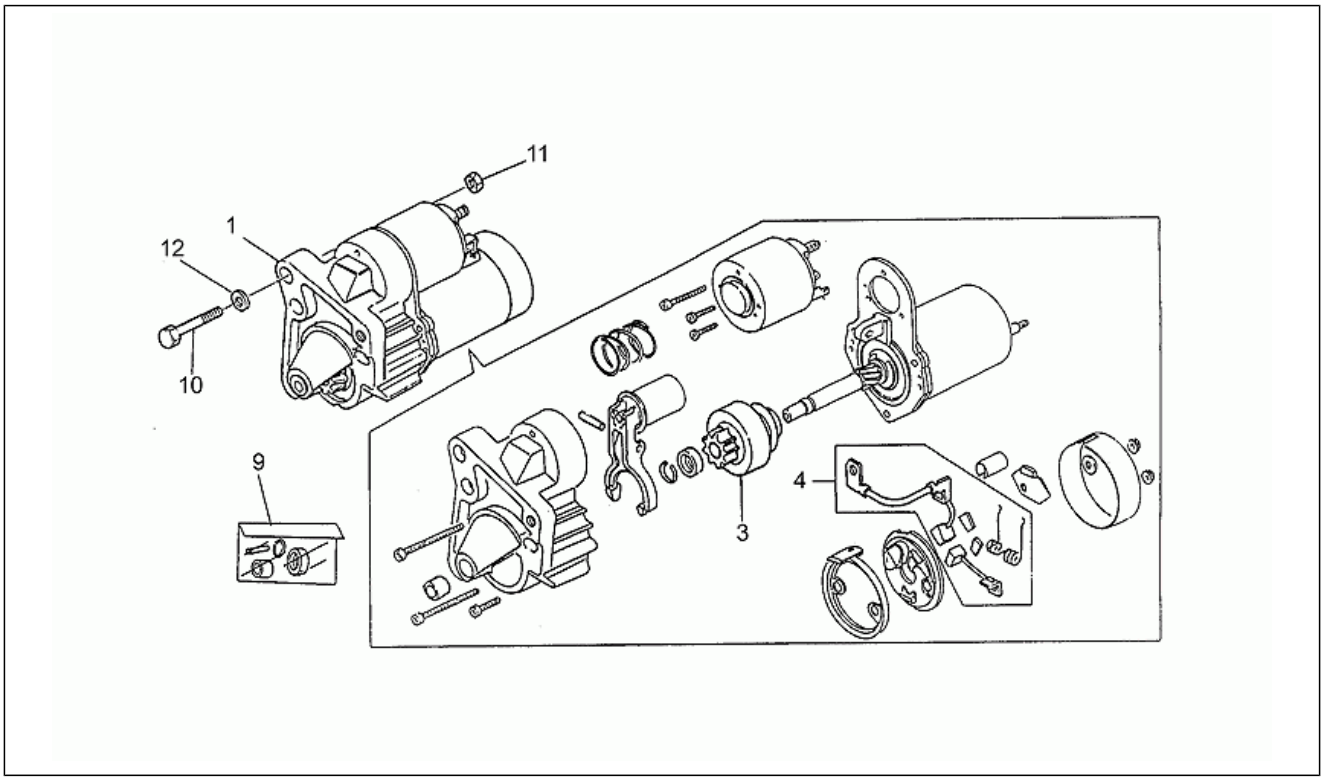

Pos.	Code	Description	Quant	Variants
1	GU30730711	Démarreur Valeo	1	
3	GU30530510	Pignon compléte	1	
4	GU30530511	Kit de révision brosse	1	
9	GU30530512	Kit rév. démarreur	1	
10	GU98052435	Vis	2	
11	GU95004208	Rondelle	2	
12	GU92602208	Ecrou	1	

Groupe	MOTEUR
Code	34.33
Description	Pompe huile
Révision	1

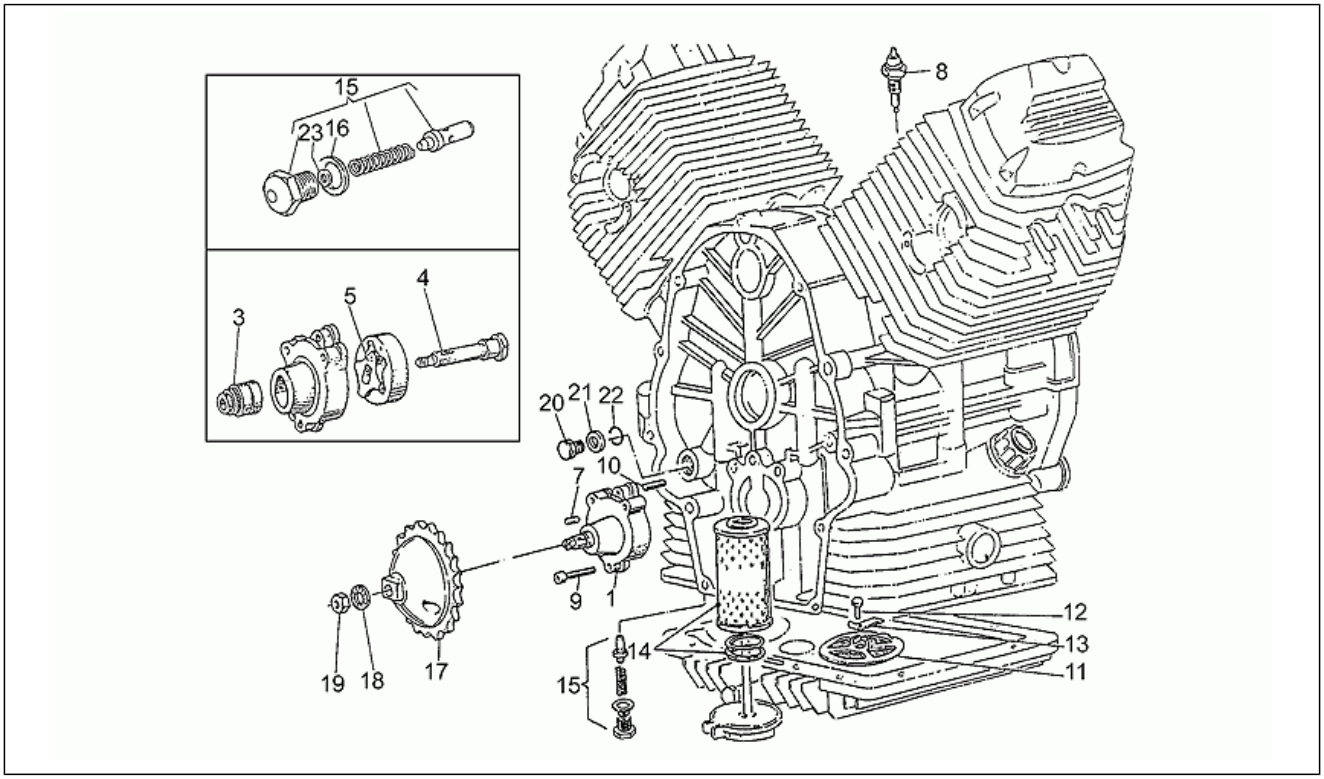

Pos.	Code	Description	Quant	Variants
1	GU19146420	Pompe huile	1	
3	GU92252210	Roulement à rouleaux 10x22x20	1	
4	GU19147820	Arbre pompe huile	1	
5	GU19148420	Rotor intérieur	1	
7	GU92296726	Rouleau guide	1	
8	GU31999581	Détecteur pression	1	**Spécifications techniques:**See spare parts comm.n.022 of 2001[02201N]
9	GU98620335	Vis M6x35	3	
10	GU19018920	Goupille	2	
11	GU19152200	Filtre à huile	1	
12	GU98054314	Vis	1	
13	GU95187006	Plaquette	1	
14	GU27153085	Filtre à huile	1	
15	GU31158250	Oil pressure valve	1	
16	GU18144350	Rondelle 18,25x24x1	3	
17	GU19147721	Engrenage pompe huile	1	
18	GU19149800	Rondelle 10,5x16x1	1	
19	GU92602510	Ecrou M10x1,25	1	
20	GU31016050	Bouchon	1	
21	GU18161150	Garniture 14,25	1	
22	GU90706111	Joint torique	1	
23	GU95004206	Rondelle 6,15x11x0,8	1	

Groupe	MOTEUR
Code	34.34
Description	Carter de boîte vitesses
Révision	1

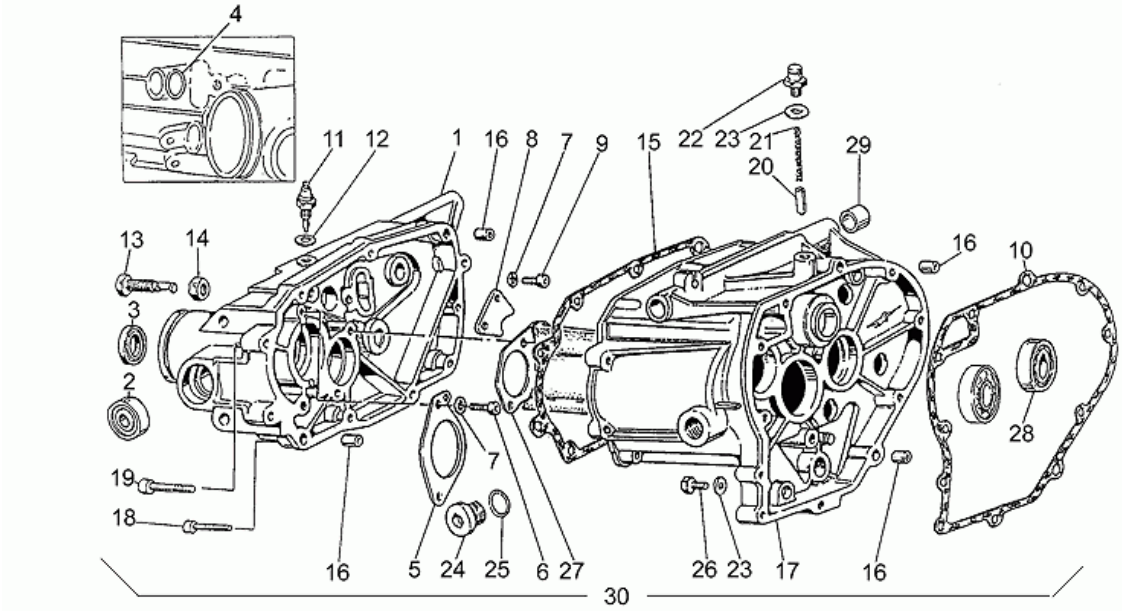

Pos.	Code	Description	Quant	Variants
1	GU31200880	Couvercle boîte vit. gris	1	
2	GU92204215	Roulement 15x35x11	2	
3	GU90402841	Bague d'étanchéité 28x40x7	1	
4	GU90706140	Joint torique 13,95x2,92	1	
5	GU23213870	Plaque	1	
6	GU98622314	Vis	4	
7	GU14217901	Rondelle 6,4x10x0,7	6	
8	GU19235800	Plaque	1	
9	GU98622314	Vis	2	
10	GU23200370	Joint	1	
11	GU19207220	Capteur	1	
12	GU12154200	Joint 8,25x15x1	1	
13	GU19237800	Vis M12x1,25	1	
14	GU92602512	Ecrou bas M12x1,25	1	
15	GU19201120	Joint	1	
16	GU19002020	Bague 6,6x9x13	4	
17	GU31200280	Boîte de vitesses grise	1	
18	GU98620330	Vis	7	
19	GU98620435	Vis	4	
20	GU55234700	Encliquetage	1	
21	GU94321067	Retour levier démarrage	1	
22	GU19206501	Bouchon purge	1	
23	GU10528900	Garniture	2	
24	GU12022600	Bouchon huile	1	
25	GU90706203	Joint torique 20,24X2,62	1	
26	GU31003766	Bouchon vid.huile M10x1	1	
27	GU19208220	Huile cloison	1	
28	GU92201120	Roulement à billes 20x42x12	1	

Groupe	MOTEUR
Code	34.34
Description	Carter de boîte vitesses
Révision	1

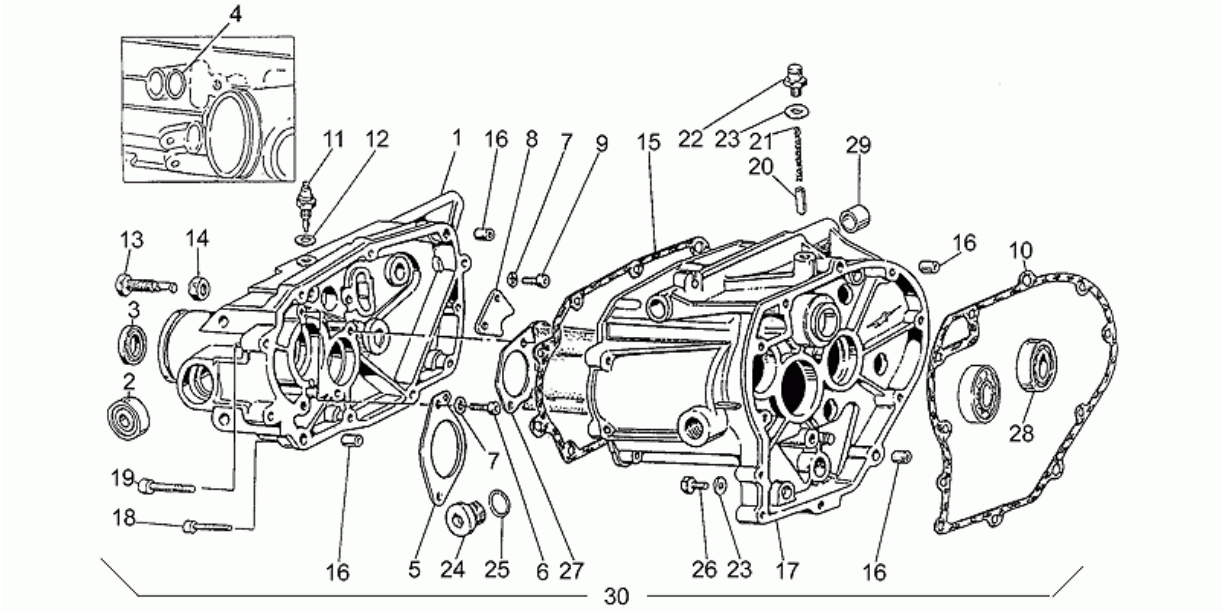

Pos.	Code	Description	Quant	Variants
29	GU19202320	Bague 10,25x15,7x8	2	
30	GU31991580	Boîte vitesses cpl. grise	1	

Groupe	MOTEUR
Code	34.35
Description	Tête cylindre
Révision	1

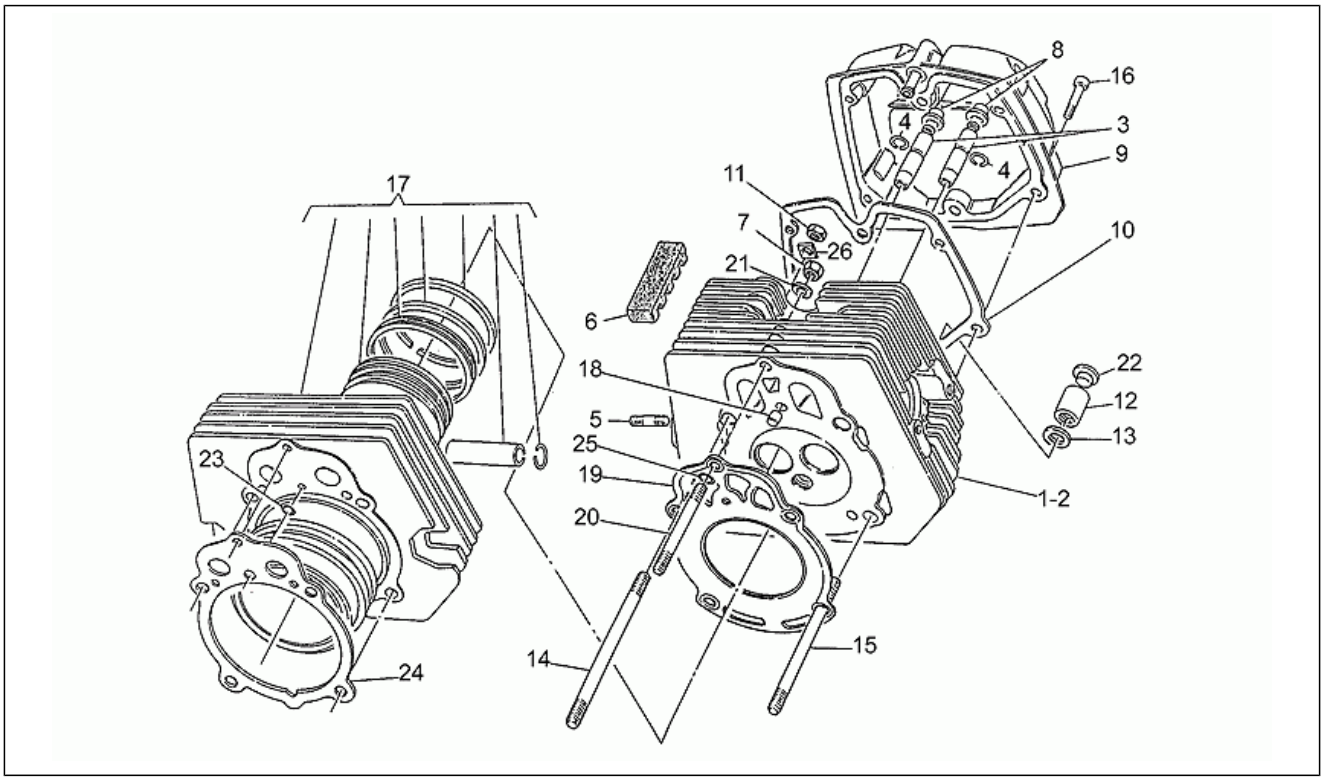

Pos.	Code	Description	Quant	Variants
1	GU31022180	Culasse d.gris	1	
2	GU31022280	Culasse g.gris	1	
3	GU61036801	Guide soupape	4	
4	GU90353009	Anneau élastique	4	
5	GU96506042	Vis sans tête	4	
6	GU19025300	Plaquette antivibratile	4	
7	GU19021920	Ecrou	2	
8	GU19037820	Joint spi	4	
9	GU31023500	Couvercle soupapes inox	2	
10	GU19023700	Joint	2	
11	GU92603010	Ecrou M10X1,5	4	
12	GU13021900	Ecrou colonne	4	
13	GU95129180	Rondelle 10,5X18X0,8	4	
14	GU96510182	Vis sans tête	4	
15	GU96510125	Vis sans tête 125 mm	4	
16	GU98622325	Vis	12	
17	GU31060181	Cylindre av.piston cpl.	2	
18	GU19021320	Bague	2	
19	GU27022020	Joint tête	2	
20	GU96508107	Vis sans tête	2	
21	GU61270300	Rondelle élastique 8x15x0,3	2	
22	GU93180245	Bouchon	4	
23	GU61027200	Joint torique	2	
24	GU27020820	Joint	2	
25	GU90706076	Joint torique	2	
26	GU19032980	Cale	4	

PIAGGIO &C.s.p.a.

MOTO GUZZI

CATALOGUE DE PIÈCES DE RECHANGE



Nevada 350 1993-1997

Préfixe du cadre: ZGULG1200

Préfixe du moteur:

NEVADA **GU032**

Index

Produits finis....4
Index alphanumérique....5
CHASSIS....12
Tableau 33.01 - Batterie altern. Saprisa....12
Tableau 33.02 - Coffre....13
Tableau 33.03 - Kit coffre rigide....14
Tableau 33.04 - Kit coffre en cuir....15
Tableau 33.05 - Carrosserie....16
Tableau 33.06 - Béquille....19
Tableau 33.07 - Couple conique AR....21
Tableau 33.08 - Couvre-châssis....24
Tableau 33.09 - Tableau de bord....26
Tableau 33.10 - Phare avant-Klaxon....28
Tableau 33.11 - Feu arrière....30
Tableau 33.12 - Filtre air....31
Tableau 33.13 - Fourche arriere....32
Tableau 33.14 - Circuit electrique I....34
Tableau 33.15 - Circuit electrique II....35
Tableau 33.16 - Sys.frein avant....36
Tableau 33.17 - Sys.frein arrière....38
Tableau 33.18 - Guidon - Commandes....40
Tableau 33.19 - Pare-brise....41
Tableau 33.20 - Garde-boue AV-AR....42
Tableau 33.21 - Repose-Pieds....44
Tableau 33.22 - Pince frein arrière....45
Tableau 33.23 - Porte-bagages....46
Tableau 33.24 - Roue Av....47
Tableau 33.25 - Roue arrière....48
Tableau 33.26 - Suspension avant....49
Tableau 33.27 - Suspension avant/arriere....51
Tableau 33.28 - Chassis....52
Tableau 33.29 - Allumage I....53
Tableau 33.30 - Allumage II....55
Tableau 33.32 - Alimentation....56
Tableau 33.38 - Groupe echappement....57
Tableau 33.40 - Levier boîte de vitesses....59
MOTEUR....60
Tableau 34.31 - Arbre moteur....60
Tableau 34.33 - Boîte de vitesses....61
Tableau 34.34 - Carburateurs....64
Tableau 34.35 - Carter moteur....66
Tableau 34.36 - Distribution....68
Tableau 34.37 - Embrayage....69

Tableau 34.39 - Démarreur 71
Tableau 34.41 - Pompe huile 72
Tableau 34.42 - Carter de boîte vitesses 74
Tableau 34.43 - Tête cylindre 76

Produits finis

Code	Validité
aucun produit fini	

Code	N° de tableau	Pos.
0000000	33.29	21
0000000	33.29	21
0000000	34.34	13
0000000	34.34	16
0000000	34.34	23
0000000	34.34	29
0000000	34.34	33
0000000	34.34	34
0000000	34.34	39
0000000	34.34	40
0000000	34.34	9
0000000	34.39	5
0000000	34.39	6
0000000	34.39	7
0000000	34.39	8
GU00823923140	33.12	25
GU00823931070	33.05	14
GU00823931070	33.05	3
GU00823931070	33.08	32
GU00823944050	33.12	4
GU00823950050	33.17	24
GU00823956080	33.05	10
GU04000500	34.35	13
GU10054100	34.33	12
GU10054100	34.33	42
GU10214300	34.33	27
GU10214301	34.33	27
GU10214302	34.33	27
GU10214303	34.33	27
GU10214304	34.33	27
GU10214305	34.33	27
GU10528900	33.07	11
GU10528900	33.07	9
GU10528900	34.35	22
GU10528900	34.42	23
GU10934900	34.34	38
GU12003702	34.35	30
GU12087001	34.37	10
GU12154200	34.35	33
GU12154200	34.42	12
GU12434001	33.06	5
GU12616101	33.24	3
GU12616101	33.25	16
GU12616102	33.24	3
GU12616102	33.25	16
GU12616103	33.24	3
GU12616103	33.25	16
GU12937200	34.34	10
GU13021900	34.35	36
GU13021900	34.43	12
GU13432640	33.06	4
GU13933100	34.34	42
GU13934700	34.34	37
GU13936200	34.34	26
GU13936300	34.34	27
GU13936600	34.34	30
GU13936700	34.34	31
GU13937800	34.34	25
GU13937900	34.34	21
GU14086000	34.37	9
GU14086100	34.37	11
GU14090201	34.37	13
GU14090400	34.37	14
GU14109000	33.28	13
GU14217901	34.37	31
GU14217901	34.37	6
GU14217901	34.42	7

Code	N° de tableau	Pos.
GU14251001	33.17	2
GU14251001	33.40	2
GU14423800	33.06	12
GU14494600	33.27	3
GU14516700	33.27	4
GU14517000	33.27	5
GU14547800	33.13	14
GU14609650	33.12	5
GU14609650	33.14	20
GU14609650	33.15	17
GU14609650	33.18	7
GU14609650	33.28	12
GU14609650	33.32	17
GU14615901	33.13	20
GU14615901	33.24	12
GU14615901	33.26	39
GU14615901	33.38	18
GU14615901	34.31	18
GU14634400	33.25	11
GU14717600	33.29	18
GU14756255	33.10	5
GU14769200	33.09	34
GU14931650	34.34	32
GU14934650	34.34	11
GU17113450	33.12	12
GU17113651	33.12	13
GU17114050	33.12	14
GU17114650	33.12	3
GU17252050	33.40	13
GU17434060	33.06	14
GU17451750	33.01	20
GU17659352	33.17	30
GU17661052	33.17	23
GU17718350	33.29	19
GU17740405	33.10	11
GU17750520	33.14	8
GU17750520	33.15	14
GU17762150	33.09	11
GU17937450	34.34	22
GU18144350	34.41	16
GU18161150	34.41	21
GU18257551	33.17	7
GU18257950	33.40	22
GU18513460	33.26	6
GU18513560	33.26	2
GU18516660	33.26	10
GU18577850	33.19	4
GU18740435	33.10	3
GU18759550	33.30	15
GU19000321	34.35	1
GU19001200	34.35	15
GU19001460	34.35	14
GU19002020	34.35	9
GU19002020	34.42	16
GU19003400	34.35	26
GU19003602	34.35	20
GU19003800	34.35	8
GU19007700	34.35	17
GU19015020	34.35	5
GU19016320	34.35	10
GU19017000	33.06	31
GU19018920	34.41	10
GU19021320	34.43	18
GU19021920	34.43	7
GU19022121	34.43	1
GU19022221	34.43	2
GU19023700	34.43	10

Code	N° de tableau	Pos.
GU19025280	33.38	5
GU19025300	33.29	4
GU19025300	34.43	6
GU19025460	33.38	6
GU19027500	34.36	15
GU19030500	34.36	7
GU19032000	34.36	10
GU19032300	34.36	11
GU19032980	34.36	14
GU19032980	34.43	25
GU19034000	34.36	8
GU19036021	34.36	1
GU19037820	34.43	8
GU19045020	34.36	26
GU19045861	34.36	25
GU19054521	34.36	17
GU19055700	34.36	23
GU19058021	34.36	19
GU19058220	34.36	20
GU19060700	34.31	11
GU19061000	34.31	12
GU19061220	34.31	5
GU19061320	34.31	14
GU19061521	34.31	3
GU19061820	34.31	16
GU19062020	34.31	6
GU19062221	34.31	4
GU19064121	34.31	1
GU19065400	34.31	2
GU19065623	34.31	7
GU19066522	34.31	8
GU19067700	34.31	17
GU19067900	34.37	5
GU19080161	34.37	1
GU19083462	34.37	2
GU19085701	34.37	8
GU19113900	33.12	8
GU19114300	33.12	1
GU19114480	33.32	13
GU19114680	33.32	12
GU19115520	33.32	5
GU19121050	33.38	7
GU19146420	34.41	1
GU19146422	34.41	1
GU19147721	34.41	17
GU19147820	34.41	4
GU19148420	34.41	5
GU19148620	34.41	6
GU19149800	33.19	8
GU19149800	34.41	18
GU19152200	34.41	11
GU19156001	33.12	11
GU19156701	33.12	7
GU19156900	33.12	10
GU19157800	33.17	25
GU19200261	34.42	17
GU19200462	34.37	26
GU19200861	34.42	1
GU19201120	34.42	15
GU19202320	34.42	29
GU19203460	34.37	29
GU19206501	33.07	10
GU19206501	34.42	22
GU19207220	34.42	11
GU19208220	34.42	27
GU19211120	34.33	41
GU19211361	34.33	8

Code	N° de tableau	Pos.
GU19211460	34.33	6
GU19211861	34.33	5
GU19212900	34.33	15
GU19213661	34.33	14
GU19213720	34.33	17
GU19213760	34.37	22
GU19214660	34.33	11
GU19214860	34.33	21
GU19215161	34.33	22
GU19215460	34.33	3
GU19218061	34.33	25
GU19218062	34.33	9
GU19231020	34.33	35
GU19231220	34.33	34
GU19234420	34.33	30
GU19234600	34.33	31
GU19235800	34.42	8
GU19237800	34.42	13
GU19258220	33.40	19
GU19327601	33.13	5
GU19327701	33.13	2
GU19328801	33.13	3
GU19350362	33.07	1
GU19350700	33.07	22
GU19351100	33.07	4
GU19351200	33.07	6
GU19351200	34.42	24
GU19351401	33.07	16
GU19351900	33.07	2
GU19352300	33.07	23
GU19352401	33.07	31
GU19353500	33.07	24
GU19354621	33.07	18
GU19355121	33.07	34
GU19355200	33.07	35
GU19355202	33.07	36
GU19355300	33.07	33
GU19355300	34.33	32
GU19355301	33.07	33
GU19355302	33.07	33
GU19355303	33.07	33
GU19355304	33.07	33
GU19355305	33.07	33
GU19355306	33.07	33
GU19355307	33.07	33
GU19355308	33.07	33
GU19355309	33.07	33
GU19355320	33.07	40
GU19355321	33.07	40
GU19355322	33.07	40
GU19355323	33.07	40
GU19355324	33.07	40
GU19355325	33.07	40
GU19355326	33.07	40
GU19355327	33.07	40
GU19355328	33.07	40
GU19355329	33.07	40
GU19355400	33.07	21
GU19355402	33.07	21
GU19355404	33.07	21
GU19355406	33.07	21
GU19355408	33.07	21
GU19355410	33.07	21
GU19355411	33.07	21
GU19355412	33.07	21
GU19355413	33.07	21
GU19356320	33.07	19

Code	N° de tableau	Pos.
GU19356700	33.07	30
GU19356760	34.37	24
GU19356801	33.07	28
GU19357660	33.07	25
GU19433000	33.12	27
GU19529660	33.26	29
GU19547000	33.13	12
GU19632501	33.25	4
GU19632502	33.25	5
GU19652300	33.16	16
GU19652336	33.16	15
GU19659500	33.17	28
GU19659600	33.17	29
GU19667500	33.17	14
GU19667600	33.17	15
GU19668000	33.22	16
GU19704800	33.01	3
GU19705900	33.28	3
GU19707100	33.01	5
GU19718000	33.32	14
GU19740302	33.10	14
GU19740303	33.10	10
GU19740404	33.10	7
GU19740454	33.10	2
GU19741336	33.09	36
GU19748000	33.01	6
GU19748400	33.01	7
GU19762810	33.09	35
GU19768680	33.09	17
GU19782520	33.28	2
GU19917535	33.05	35
GU19934480	34.34	41
GU19934600	34.34	7
GU19935080	34.34	12
GU19935750	34.34	4
GU19936000	34.34	6
GU19938580	34.34	14
GU19939980	34.34	19
GU19999021	34.35	35
GU19999580	34.35	34
GU20003410	34.35	26
GU20003510	34.35	19
GU20108120	33.29	5
GU20147710	34.41	17
GU20147810	34.41	4
GU20148410	34.41	5
GU20148610	34.41	6
GU20208520	34.33	40
GU20236220	34.33	38
GU20527620	33.26	14
GU20716720	33.29	11
GU20721610	33.29	6
GU20723820	33.29	2
GU20999520	34.33	44
GU23036100	34.36	2
GU23093870	33.18	20
GU23200370	34.42	10
GU23202074	34.33	28
GU23208272	34.42	27
GU23210570	34.33	1
GU23211372	34.33	8
GU23212070	34.33	2
GU23213870	34.42	5
GU23213872	34.42	5
GU23214071	34.33	24
GU23214571	34.33	20
GU23214572	34.33	20

Code	N° de tableau	Pos.
GU23215270	34.33	23
GU23217800	34.36	28
GU23328081	33.13	7
GU23430370	33.06	3
GU23440710	33.06	18
GU23441110	33.06	20
GU23441210	33.06	21
GU23441810	33.06	19
GU23442210	33.06	30
GU23443210	33.06	24
GU23443510	33.21	2
GU23446010	33.21	1
GU234762101	33.05	16
GU23497910	33.26	4
GU23500210	33.26	41
GU23525470	33.26	17
GU23526370	33.26	5
GU23526470	33.26	19
GU23526510	33.26	45
GU23526610	33.26	20
GU23526910	33.26	22
GU23527910	33.26	37
GU23548080	33.13	8
GU23548180	33.13	9
GU23555280	33.27	10
GU23555281	33.27	7
GU23557690	33.27	19
GU23610870	33.24	16
GU23630770	33.25	17
GU23631170	33.25	14
GU23631470	33.25	13
GU23653011	33.22	1
GU23655770	33.16	28
GU23659111	33.22	12
GU23721491	33.30	12
GU23740418	33.10	6
GU23760010	33.09	1
GU23761910	33.09	5
GU23762010	33.09	6
GU23762470	33.09	2
GU23764910	33.09	9
GU23765110	33.09	8
GU23766510	33.09	13
GU23766910	33.09	32
GU23766911	33.09	20
GU23767270	33.09	4
GU23768110	33.09	14
GU23768310	33.09	3
GU23935910	34.34	5
GU23943410	33.21	21
GU23943410	33.26	42
GU23943410	33.38	22
GU25656100	33.16	19
GU25656100	33.22	8
GU27001136	34.35	25
GU27001636	34.35	24
GU27003585	34.35	19
GU27004985	34.35	28
GU27020820	34.43	24
GU27022020	34.43	19
GU27037521	34.36	4
GU27045420	34.36	27
GU27053463	34.36	16
GU27060820	34.31	13
GU27084460	34.37	4
GU27114120	33.12	15
GU27117775	33.18	8

Code	N° de tableau	Pos.
GU27133515	33.18	13
GU27152885	34.35	32
GU27153085	34.41	14
GU27153460	33.12	18
GU27157420	33.12	23
GU27159360	33.12	22
GU27159660	33.12	19
GU27350410	33.07	13
GU27356910	33.25	9
GU27357411	33.07	41
GU27418210	33.28	7
GU27499120	33.26	32
GU27526320	33.26	46
GU27526620	33.26	44
GU27604815	33.16	5
GU27613311	33.25	2
GU27631250	33.25	15
GU27633910	33.25	8
GU27634110	33.07	39
GU27635811	33.22	3
GU27654610	33.16	18
GU27654610	33.22	2
GU27661115	33.16	10
GU27663615	33.16	6
GU27664075	33.16	4
GU27710435	33.30	14
GU27721063	33.30	4
GU27723835	33.30	13
GU27760410	33.09	12
GU27914615	33.08	2
GU27933720	34.34	18
GU27934315	34.34	8
GU27934820	34.34	1
GU27935521	34.34	3
GU28157950	33.05	11
GU28238261	34.33	39
GU28252060	33.06	36
GU28256960	33.40	5
GU28258160	33.40	9
GU28432760	33.06	37
GU28526540	33.26	31
GU28527540	33.26	21
GU28556250	33.26	26
GU28556350	33.26	28
GU28556450	33.26	25
GU28657500	33.22	6
GU28659378	33.16	11
GU28659740	33.20	6
GU28660278	33.16	2
GU28703800	33.01	9
GU28704552	33.01	1
GU28707050	33.01	2
GU28712400	33.01	8
GU28712459	33.01	13
GU28712500	33.01	10
GU28740533	33.10	1
GU28742560	33.14	9
GU28742560	33.15	6
GU28745761	33.09	28
GU28747960	33.01	7
GU28769533	33.27	22
GU28929940	33.08	11
GU29105750	33.05	7
GU29436450	33.21	5
GU29479555	33.04	5
GU29579460	33.08	31
GU29704060	33.01	17
GU29721450	33.29	1
GU29722270	33.30	1
GU29725850	33.15	4
GU29728960	33.08	3
GU29748550	33.15	7
GU29759150	33.06	41
GU29765250	33.09	15
GU30103960	33.05	2
GU30135200	33.18	9
GU30157430	33.12	23
GU30464310	33.28	22
GU30477101	33.14	5
GU30477200	33.14	6
GU30530510	34.39	3
GU30530511	34.39	4
GU30530512	34.39	9
GU30530528	33.18	17
GU30601800	33.18	16
GU30602500	33.18	18
GU30603800	33.18	2
GU30605560	33.18	14
GU30605680	33.16	3
GU30606900	33.18	22
GU30607910	33.18	6
GU30611460	33.24	10
GU30660180	33.16	1
GU30716500	33.29	10
GU30717410	33.29	20
GU30717410	33.30	10
GU30730711	34.39	1
GU30732200	33.14	10
GU30732400	33.14	12
GU30732510	33.15	13
GU30732560	33.14	7
GU30732560	33.29	22
GU30738000	33.18	10
GU30738060	33.18	10
GU30738800	33.18	4
GU30738860	33.18	4
GU30743000	33.15	5
GU30749860	33.16	7
GU30756100	33.14	11
GU30769560	33.27	22
GU30917501	33.05	35
GU30917860	33.05	35
GU30917960	33.05	35
GU30920810	33.28	23
GU30925510	33.05	36
GU30925510	33.20	7
GU30925512	33.05	36
GU30925512	33.20	7
GU30942300	33.23	4
GU30942301	33.23	4
GU31000380	34.35	1
GU31001480	34.35	14
GU31003766	33.07	8
GU31003766	34.35	21
GU31003766	34.37	36
GU31003766	34.42	26
GU31016050	34.41	20
GU31022180	34.43	1
GU31022280	34.43	2
GU31023500	34.43	9
GU31037015	34.36	13
GU31038015	34.36	5
GU31060180	34.43	17
GU31060181	34.43	17
GU31060480	34.31	10
GU31060680	34.31	15
GU31066480	34.31	9
GU31067980	34.37	5
GU31093065	33.18	19
GU311002651	33.05	1
GU31100266	33.05	1
GU31100267	33.05	1
GU31100270	33.05	1
GU31100271	33.05	1
GU31100272	33.05	1
GU31100285	33.05	1
GU31100286	33.05	1
GU31100289	33.05	1
GU31103565	33.05	23
GU31105360	33.05	9
GU31105460	33.05	6
GU31112680	33.32	1
GU31112681	33.32	2
GU31114380	33.32	10
GU31115080	33.32	3
GU31115081	33.32	4
GU31115082	33.32	3
GU31115083	33.32	4
GU31117565	33.18	5
GU31120780	33.38	1
GU31120781	33.38	2
GU31120782	33.38	1
GU31120783	33.38	2
GU31122960	33.38	10
GU31123060	33.38	11
GU31123460	33.38	12
GU31123980	33.38	3
GU31123981	33.38	3
GU31126960	33.38	4
GU31128660	33.38	13
GU31128760	33.38	14
GU31132865	33.18	12
GU31155780	33.12	6
GU31158250	34.41	15
GU31200280	34.42	17
GU31200465	34.37	26
GU31200480	34.37	26
GU31200880	34.42	1
GU31210780	34.37	20
GU31250960	33.40	1
GU31252360	33.40	14
GU31256960	33.40	12
GU31257880	33.40	8
GU31350260	33.13	1
GU31350280	33.13	1
GU31350380	33.07	1
GU31400165	33.28	1
GU31400167	33.28	1
GU31420381	33.06	1
GU31422181	33.06	2
GU31432160	33.06	11
GU314344651	33.20	1
GU31434466	33.20	1
GU31434467	33.20	1
GU31434470	33.20	1
GU31434471	33.20	1
GU31434472	33.20	1
GU31434485	33.20	1
GU31434486	33.20	1
GU31434489	33.20	1
GU31436665	33.20	2

Code	N° de tableau	Pos.
GU31437067	33.20	9
GU31437070	33.20	9
GU31437071	33.20	9
GU31437072	33.20	9
GU314370801	33.20	9
GU31437081	33.20	9
GU31437085	33.20	9
GU31437086	33.20	9
GU31437089	33.20	9
GU31438065	33.08	16
GU31438665	33.08	1
GU31439160	33.20	10
GU31439565	33.20	8
GU31441260	33.21	18
GU31450266	33.19	12
GU31457865	33.08	13
GU31459165	33.08	14
GU31459866	33.19	11
GU31460561	33.05	13
GU31466566	33.23	1
GU31468065	33.23	2
GU31468165	33.23	8
GU31468265	33.23	3
GU31476266	33.05	16
GU31476267	33.05	16
GU31476285	33.05	16
GU314763621	33.05	17
GU31476366	33.05	17
GU31476367	33.05	17
GU31476385	33.05	17
GU31479430	33.28	18
GU31479561	33.08	1
GU31479630	33.28	17
GU31480062	33.04	1
GU31480065	33.03	1
GU31480462	33.04	2
GU31482065	33.03	6
GU31482066	33.02	3
GU31482565	33.03	2
GU31484065	33.02	10
GU31484065	33.03	4
GU31484066	33.02	9
GU31484066	33.03	5
GU31485065	33.03	7
GU31485765	33.03	3
GU31486565	33.03	8
GU31486665	33.04	3
GU31486765	33.04	4
GU31487565	33.02	1
GU31487665	33.02	2
GU31487765	33.02	4
GU31487865	33.02	5
GU31487866	33.02	5
GU31488165	33.03	11
GU31490265	33.27	1
GU31493140	33.26	7
GU31494065	33.26	1
GU31496165	33.26	33
GU31496265	33.26	34
GU31522565	33.26	11
GU31522665	33.26	12
GU31524550	33.26	18
GU31540280	33.13	11
GU31544160	33.13	23
GU31570665	33.05	19
GU31570765	33.05	22
GU31575161	33.19	1

Code	N° de tableau	Pos.
GU31575365	33.05	24
GU31575465	33.05	25
GU31575565	33.08	15
GU31577261	33.19	2
GU31600365	33.18	1
GU31603065	33.18	11
GU31603565	33.18	3
GU31610365	33.24	1
GU31613365	33.24	9
GU31613380	33.25	2
GU31614160	33.24	14
GU31615260	33.24	5
GU31616360	33.24	15
GU31616361	33.24	15
GU31620365	33.24	4
GU31626860	33.17	9
GU31626880	33.40	11
GU31627162	33.24	15
GU31630365	33.25	1
GU31633330	33.25	10
GU31634130	33.22	5
GU31634230	33.22	4
GU31652265	33.16	15
GU31652365	33.16	16
GU31653060	33.22	1
GU31654660	33.22	2
GU31654665	33.16	18
GU31654765	33.16	17
GU31656860	33.16	14
GU31657165	33.16	13
GU31658865	33.16	36
GU31659160	33.22	12
GU31659165	33.16	24
GU31659260	33.22	13
GU31659265	33.16	23
GU31666990	33.17	13
GU31675280	33.17	6
GU31677060	33.17	1
GU31704061	33.15	15
GU31705360	33.01	4
GU31716560	33.30	6
GU31717015	33.30	11
GU31717060	33.30	11
GU31717061	33.29	21
GU31722065	33.29	7
GU31722140	33.30	16
GU31724540	33.14	4
GU31724540	33.15	16
GU31735360	33.09	33
GU31735560	33.09	30
GU31740420	33.10	3
GU31740520	33.10	1
GU31740960	33.11	1
GU31741260	33.11	4
GU31741760	33.11	2
GU31743765	33.10	17
GU31743766	33.10	18
GU31744265	33.10	22
GU31744765	33.10	23
GU31745865	33.08	18
GU31746365	33.15	12
GU31747166	33.15	1
GU31747167	33.14	1
GU31747266	33.15	2
GU31747267	33.14	2
GU31747365	33.14	3
GU31747365	33.15	3

Code	N° de tableau	Pos.
GU31749765	33.14	17
GU31750665	33.10	13
GU31750666	33.10	13
GU31751365	33.27	20
GU31751665	33.11	5
GU31751666	33.11	6
GU31753765	33.10	16
GU31753765	33.11	8
GU31759360	33.06	38
GU31761560	33.09	2
GU31762561	33.24	17
GU31762562	33.24	17
GU31764165	33.09	19
GU31767260	33.09	4
GU31769465	33.18	21
GU31781665	33.26	43
GU31900060	33.08	10
GU31900061	33.08	10
GU31900065	33.08	10
GU31912760	33.27	23
GU31922085	33.05	4
GU31922086	33.05	4
GU31922087	33.05	4
GU31923365	33.05	18
GU31923366	33.05	18
GU31923370	33.05	18
GU31934460	34.34	41
GU31934680	34.34	36
GU31937780	34.34	2
GU31945467	33.05	32
GU31991080	34.35	39
GU31991082	34.35	39
GU31991580	34.42	30
GU31991582	34.42	30
GU31999262	33.27	6
GU31999581	34.41	8
GU35214300	33.13	13
GU35755780	33.09	29
GU39103400	33.28	11
GU39238100	34.33	43
GU39474600	33.08	17
GU39611601	33.24	2
GU39654700	33.16	17
GU39659000	33.16	25
GU39659100	33.16	24
GU39663801	33.16	30
GU39937600	34.34	24
GU43934000	34.34	35
GU51609800	33.21	16
GU53429500	33.06	32
GU55234700	34.42	20
GU61013800	33.01	15
GU61013800	33.06	42
GU61013800	33.17	19
GU61013800	33.32	9
GU61013800	33.38	8
GU61013800	33.40	20
GU61013800	33.40	7
GU61027200	34.43	23
GU61036801	34.43	3
GU61038100	34.36	6
GU61054900	34.36	18
GU61108400	33.12	21
GU61108500	33.29	23
GU61127220	33.14	19
GU61127220	33.38	21
GU61127520	33.14	18

Code	N° de tableau	Pos.
GU61127520	33.38	20
GU61238200	34.33	39
GU61270300	33.06	26
GU61270300	33.07	26
GU61270300	33.16	21
GU61270300	33.21	3
GU61270300	33.21	8
GU61270300	33.22	10
GU61270300	33.38	15
GU61270300	34.35	6
GU61270300	34.37	35
GU61270300	34.43	21
GU61609630	33.12	26
GU63657000	33.22	17
GU65659200	33.16	23
GU65663500	33.17	21
GU65933600	34.34	15
GU65933700	34.34	28
GU66440630	33.21	12
GU66440730	33.21	13
GU66441630	33.21	15
GU66441730	33.21	6
GU66441830	33.21	14
GU66443230	33.21	17
GU66466815	33.28	25
GU66468115	33.28	26
GU66659031	33.16	25
GU71920518	33.05	36
GU71920518	33.20	7
GU89000074	33.05	16
GU89000075	33.05	16
GU89000076	33.05	16
GU89000077	33.05	17
GU89000078	33.05	17
GU89000079	33.05	17
GU90271008	33.17	22
GU90271018	34.36	12
GU90271020	34.33	33
GU90271117	34.33	29
GU90271121	34.33	19
GU90271127	34.33	4
GU90272023	33.13	4
GU90272075	34.37	3
GU90280005	33.28	20
GU90280006	33.21	11
GU90353009	34.43	4
GU90353029	34.36	24
GU90353030	33.07	17
GU90400616	34.37	21
GU90401530	34.35	11
GU90402840	34.35	18
GU90402841	34.42	3
GU90403245	34.37	19
GU90403247	33.07	38
GU90403547	33.07	3
GU90403857	33.26	13
GU90405367	34.35	13
GU90407590	33.07	15
GU90706035	33.08	22
GU90706076	33.07	42
GU90706092	33.20	4
GU90706094	33.26	36
GU90706111	34.41	22
GU90706140	34.42	4
GU90706141	33.17	27
GU90706141	33.40	4
GU90706170	34.37	12
GU90706188	33.07	29
GU90706188	34.33	18
GU90706203	33.07	7
GU90706203	34.42	25
GU90706235	34.37	23
GU90706282	33.26	27
GU90706282	34.35	29
GU90706444	34.35	27
GU90706552	33.07	37
GU90706552	33.12	9
GU90714082	33.12	24
GU91180602	33.06	34
GU91180605	33.16	34
GU91180608	33.29	25
GU91180617	33.09	26
GU91180721	33.30	8
GU91180804	33.27	17
GU91180829	33.20	5
GU91181114	33.06	7
GU91181407	33.27	18
GU91182010	34.33	40
GU91551080	33.29	24
GU91551085	33.08	12
GU91551085	33.28	10
GU91551120	33.16	29
GU91551131	33.05	21
GU91551167	33.09	25
GU92201070	33.07	14
GU92201120	34.42	28
GU92201220	34.33	16
GU92201225	34.37	28
GU92204215	34.42	2
GU92204217	33.25	7
GU92204218	33.25	6
GU92204221	33.24	6
GU92218417	34.33	10
GU92230320	34.33	13
GU92234716	34.33	26
GU92249220	33.07	32
GU92249223	33.07	20
GU92249225	33.27	2
GU92251023	34.33	7
GU92252210	34.41	3
GU92252235	33.07	5
GU92295704	33.23	6
GU92295708	33.16	9
GU92296723	34.41	7
GU92296726	34.41	7
GU92297909	34.33	36
GU92601002	33.16	26
GU92601206	33.23	10
GU92602206	33.06	29
GU92602206	33.18	15
GU92602206	33.40	10
GU92602208	33.03	13
GU92602208	33.22	14
GU92602208	34.35	7
GU92602208	34.37	25
GU92602210	33.06	16
GU92602210	33.13	18
GU92602210	33.26	30
GU92602210	33.28	6
GU92602308	33.26	38
GU92602312	33.11	9
GU92602316	33.25	12
GU92602406	34.36	9
GU92602410	33.27	13
GU92602508	33.06	33
GU92602508	34.37	15
GU92602510	34.41	19
GU92602512	34.42	14
GU92602516	33.24	8
GU92603010	34.43	11
GU92630104	33.08	19
GU92630104	33.29	14
GU92630105	33.08	20
GU92630105	33.15	20
GU92630106	33.02	8
GU92630106	33.08	9
GU92630106	33.09	27
GU92630106	33.10	26
GU92630106	33.11	11
GU92630106	33.16	35
GU92630106	33.17	20
GU92630106	33.29	17
GU92630106	33.40	21
GU92630108	33.28	24
GU92630110	33.19	9
GU92630206	33.08	27
GU92630206	33.14	16
GU92630206	33.20	15
GU92630206	33.29	27
GU92630508	33.21	9
GU92630508	33.24	13
GU92630508	33.40	18
GU92630510	33.06	10
GU92660008	33.38	19
GU92660208	33.10	21
GU92660501	33.15	11
GU92660601	33.01	16
GU92660601	33.05	28
GU92660601	33.08	30
GU92660801	33.05	31
GU92670206	33.05	15
GU92670305	33.12	17
GU92690073	33.17	8
GU92701062	33.38	9
GU92781081	33.13	19
GU92781081	33.38	16
GU92781085	33.27	14
GU93110060	33.08	7
GU93110060	33.11	13
GU93110060	33.19	6
GU93110060	33.20	13
GU93110082	33.05	33
GU93180060	33.08	4
GU93180105	33.13	21
GU93180206	33.21	20
GU93180216	33.19	15
GU93180220	34.37	27
GU93180245	34.43	22
GU93301175	33.08	25
GU93301313	33.22	15
GU93305017	33.05	5
GU93305018	33.12	20
GU93305031	33.32	11
GU93305074	33.13	10
GU93305092	33.12	2
GU93450119	33.10	12
GU93450127	33.10	15
GU93450127	33.11	7
GU93450140	33.09	18
GU93450224	33.11	3
GU93450232	33.10	4

Code	N° de tableau	Pos.
GU94321007	33.23	7
GU94321067	34.42	21
GU94321099	33.13	6
GU94321105	34.37	16
GU94322215	33.06	8
GU95000205	33.08	23
GU95000205	33.30	3
GU95000206	33.02	7
GU95000206	33.08	6
GU95000206	33.10	25
GU95000206	33.11	12
GU95000206	33.16	33
GU95000206	33.17	18
GU95000206	33.20	12
GU95000206	33.22	11
GU95000206	33.29	26
GU95000208	33.01	19
GU95000208	33.03	10
GU95000208	33.06	25
GU95000210	33.03	15
GU95000210	33.06	9
GU95000210	33.19	10
GU95001206	33.05	27
GU95004204	33.29	13
GU95004205	33.09	22
GU95004205	33.15	8
GU95004205	33.29	9
GU95004205	33.32	15
GU95004206	33.09	24
GU95004206	33.14	14
GU95004206	33.16	32
GU95004206	33.17	16
GU95004206	33.23	9
GU95004206	33.29	16
GU95004206	34.41	23
GU95004208	33.13	22
GU95004208	33.27	15
GU95004208	33.28	9
GU95004208	33.40	24
GU95004210	33.06	28
GU95004210	33.10	8
GU95004210	33.13	17
GU95004210	33.27	12
GU95004210	33.28	15
GU95004210	34.37	37
GU95004215	33.17	4
GU95004217	33.24	7
GU95020105	33.09	10
GU95021105	33.01	11
GU95021108	33.21	7
GU95021112	33.11	10
GU95100059	33.12	16
GU95100059	33.15	19
GU95100116	33.26	16
GU95100116	33.32	7
GU95100120	33.14	15
GU95100121	33.05	30
GU95100128	33.15	10
GU95100141	33.08	8
GU95100141	33.20	14
GU95100144	33.19	5
GU95100235	33.27	8
GU95100250	33.16	22
GU95100251	33.16	22
GU95100256	33.05	20
GU95100256	33.27	21
GU95100523	33.13	24

Code	N° de tableau	Pos.
GU95100709	34.35	31
GU95120105	33.28	5
GU95129110	33.17	11
GU95129110	33.40	16
GU95129115	34.36	22
GU95129130	33.06	35
GU95129180	33.27	11
GU95129180	34.35	38
GU95129180	34.43	13
GU95129260	33.17	3
GU95129260	33.40	3
GU95187006	34.41	13
GU95401215	33.06	15
GU95401215	33.28	19
GU95500222	33.13	25
GU95500222	33.17	12
GU95500222	33.40	17
GU95500222	34.37	18
GU95500227	33.17	5
GU95520316	34.33	37
GU95770265	33.17	10
GU95770265	33.40	15
GU95780271	34.37	17
GU95990028	33.16	12
GU95990028	33.22	7
GU96451430	34.35	3
GU96451560	34.35	2
GU96506040	33.40	23
GU96506042	34.43	5
GU96508032	33.27	16
GU96508055	33.07	12
GU96508055	34.35	4
GU96508107	34.43	20
GU96510125	34.43	15
GU96510145	34.43	15
GU96510182	34.43	14
GU98052325	33.17	17
GU98052325	33.40	6
GU98052470	33.24	11
GU98052535	33.06	40
GU98052555	33.28	16
GU98052565	33.06	27
GU98054212	33.08	21
GU98054220	33.32	16
GU98054230	33.09	21
GU98054230	33.09	31
GU98054312	33.08	24
GU98054314	33.06	23
GU98054314	33.08	28
GU98054314	34.37	30
GU98054314	34.41	12
GU98054316	33.17	26
GU98054316	34.37	7
GU98054318	33.08	29
GU98054320	33.20	11
GU98054322	33.06	17
GU98054325	33.08	5
GU98054325	33.09	23
GU98054418	33.28	8
GU98054422	33.03	12
GU98054530	33.06	6
GU98110199	33.28	14
GU98200214	33.16	8
GU98200306	33.05	8
GU98230612	33.23	5
GU98230616	33.10	24
GU98230620	33.05	26

Code	N° de tableau	Pos.
GU98230621	33.02	6
GU98230621	33.05	34
GU98230622	33.29	3
GU98230626	33.05	29
GU98230630	33.16	31
GU98230816	33.10	19
GU98230822	33.05	12
GU98230826	33.20	3
GU98231023	33.08	26
GU98231023	33.10	9
GU98231045	33.03	14
GU98231045	33.19	7
GU98250830	33.21	10
GU98270621	33.19	3
GU98290512	33.30	2
GU98304014	33.21	19
GU98310610	33.32	6
GU98610125	33.29	12
GU98610540	33.26	8
GU98612110	33.06	39
GU98612320	33.10	20
GU98612425	33.22	9
GU98612535	33.26	3
GU98612535	33.26	9
GU98620222	33.29	8
GU98620240	33.28	21
GU98620240	33.30	7
GU98620250	33.01	12
GU98620325	34.35	16
GU98620330	34.35	37
GU98620330	34.37	32
GU98620330	34.42	18
GU98620335	34.35	23
GU98620335	34.41	9
GU98620335	34.42	18
GU98620360	33.29	15
GU98620435	33.26	40
GU98620435	34.37	33
GU98620435	34.39	10
GU98620435	34.42	19
GU98620450	34.37	34
GU98620540	33.19	13
GU98620545	33.13	16
GU98620545	33.26	23
GU98622214	33.09	7
GU98622214	33.15	18
GU98622214	33.15	9
GU98622218	33.15	21
GU98622218	33.30	9
GU98622310	33.22	18
GU98622314	34.42	6
GU98622314	34.42	9
GU98622316	33.01	14
GU98622318	33.14	13
GU98622318	33.30	5
GU98622320	33.26	15
GU98622325	33.32	8
GU98622325	34.43	16
GU98622416	33.01	18
GU98622420	33.03	9
GU98622420	33.19	14
GU98622420	33.21	4
GU98622420	33.38	17
GU98622422	33.16	20
GU98622425	33.16	27
GU98622425	33.25	3
GU98622425	33.26	35

Code	N° de tableau	Pos.
GU98622525	33.28	4
GU98622530	33.26	24
GU98822316	34.36	21
GU98822416	33.27	9
GU99105129	33.06	13
GU99210210	33.09	16

Groupe	CHASSIS
Code	33.01
Description	Batterie altern. Saprisa
Révision	1

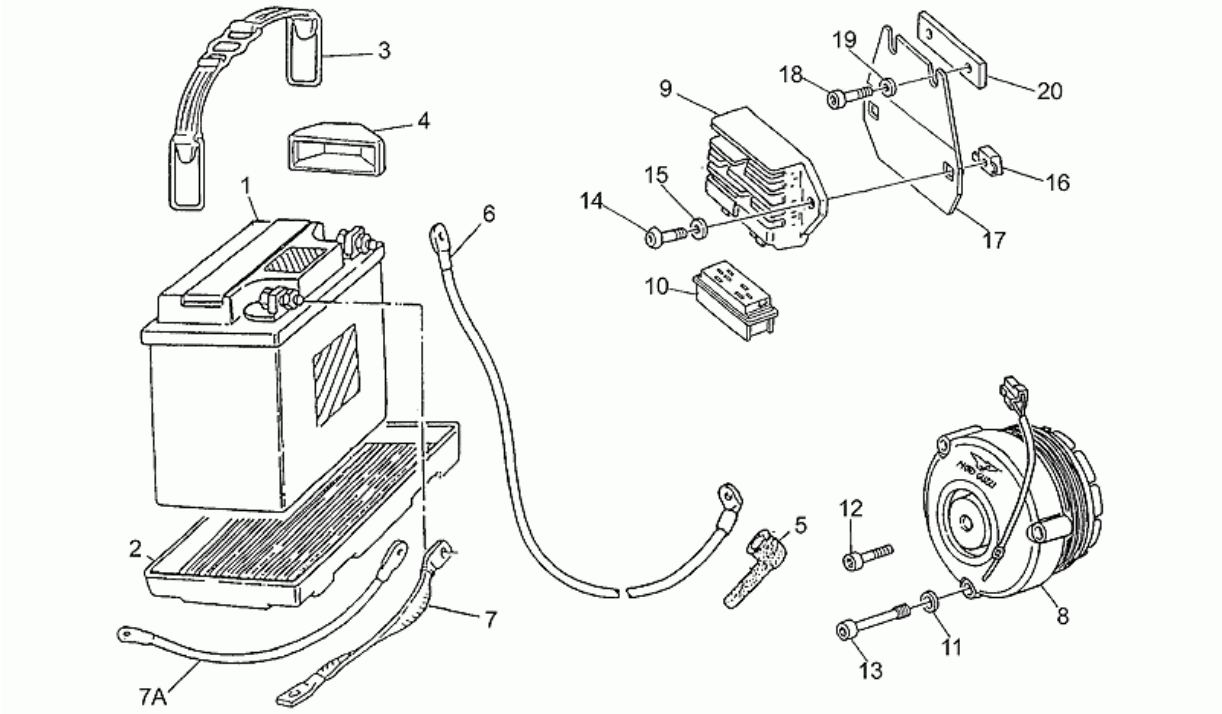

Pos.	Code	Description	Quant	Variants
1	GU28704552	Batterie 12V-24Ah	1	**Spécifications techniques:**Fiamm 61F 130PRM[F]
2	GU28707050	Boîtier batterie	1	
3	GU19704800	Bride	1	
4	GU31705360	Cône fixation accumulateur	1	
5	GU19707100	Capuchon	2	
6	GU19748000	Cablage	1	
7	GU19748400	Câblage masse-batterie	1	
7	GU28747960	Câblage masse-batterie	1	
8	GU28712400	Alternateur SAPRISA	1	
9	GU28703800	Régulateur de tension SAPRISA	1	
10	GU28712500	Connecteur SAPRISA	1	
11	GU95021105	Rondelle évent.	3	
12	GU98620250	Vis	1	
13	GU28712459	Vis	3	
14	GU98622316	Vis	2	
15	GU61013800	Rondelle spéciale	2	
16	GU92660601	Ecrou en cage	2	
17	GU29704060	Plaque support	1	
18	GU98622416	Vis	2	
19	GU95000208	Rondelle	2	
20	GU17451750	Plaquette	1	

Groupe	CHASSIS
Code	33.02
Description	Coffre
Révision	1

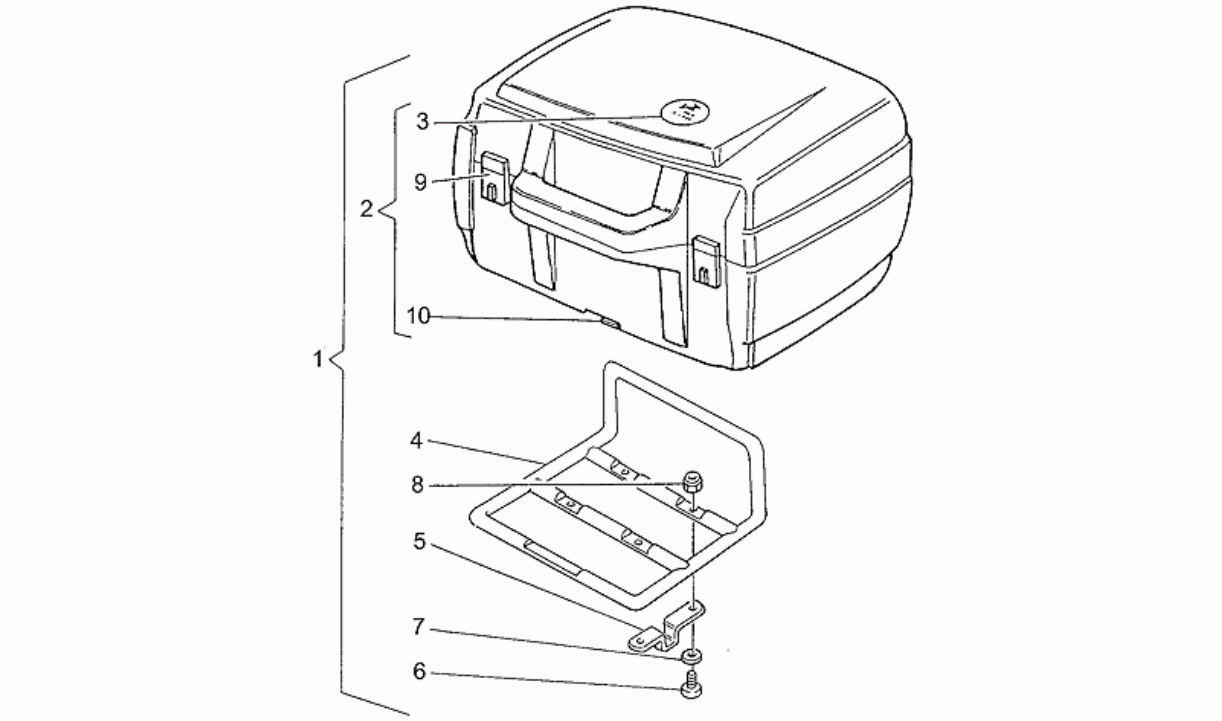

Pos.	Code	Description	Quant	Variants
1	GU31487565	Kit coffre rigide	1	
2	GU31487665	Coffre 40 L	1	
3	GU31482066	Décalco "Moto Guzzi"	1	
4	GU31487765	Plaque support	1	
5	GU31487865	Bride droite	1	
5	GU31487866	Bride gauche	1	
6	GU98230621	Vis	4	
7	GU95000206	Rondelle	4	
8	GU92630106	Ecrou M6x1	4	
9	GU31484066	Serrure couvercle	2	
10	GU31484065	Serrure coffre	1	

Groupe	CHASSIS
Code	33.03
Description	Kit coffre rigide
Révision	1

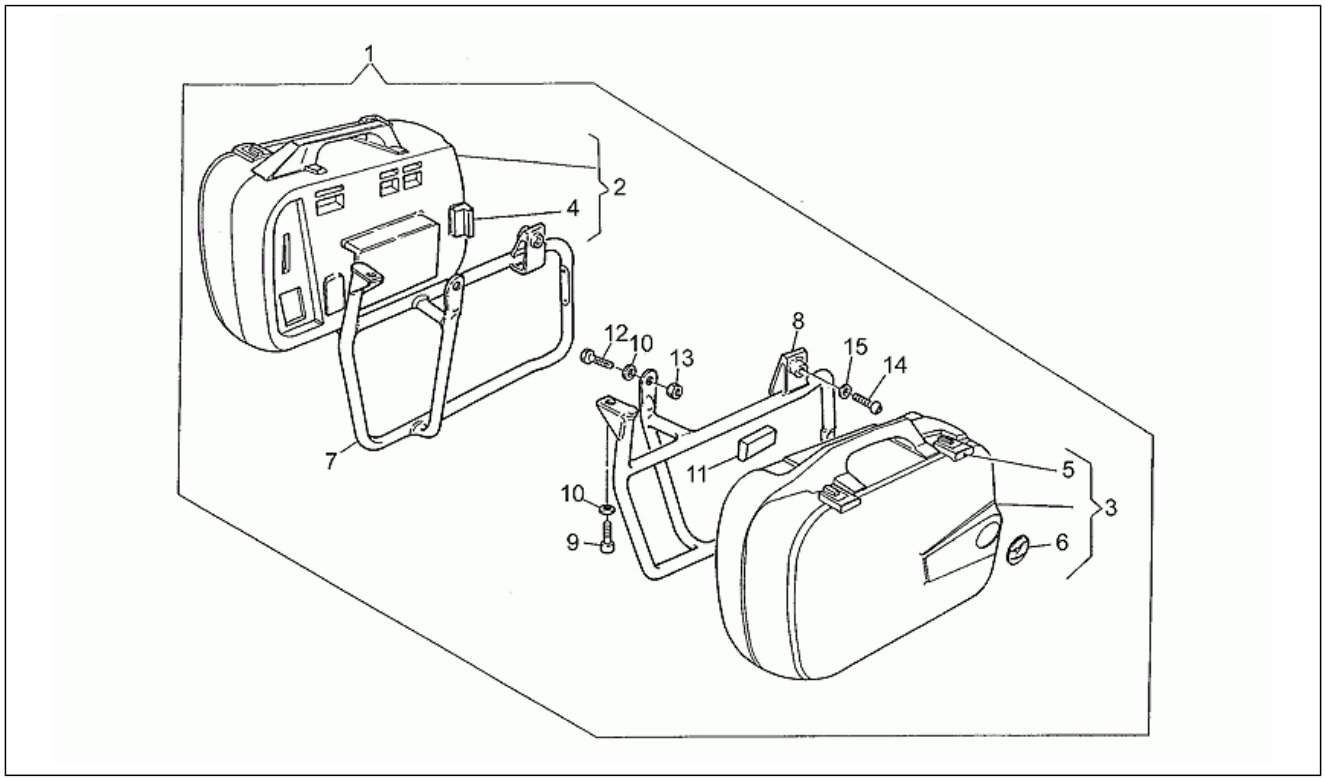

Pos.	Code	Description	Quant	Variants
1	GU31480065	Suitcase kit 30 L	1	
2	GU31482565	RH suitcase 30 L	1	
3	GU31485765	LH suitcase 30 L	1	
4	GU31484065	Serrure coffre	2	
5	GU31484066	Serrure couvercle	4	
6	GU31482065	Plaque "Moto Guzzi"	2	
7	GU31485065	Support sac d.	1	
8	GU31486565	Support sac g.	1	
9	GU98622420	Vis	2	
10	GU95000208	Rondelle	4	
11	GU31488165	Caoutchouc	2	
12	GU98054422	Vis M8x22	2	
13	GU92602208	Ecrou	2	
14	GU98231045	Vis	2	
15	GU95000210	Rondelle	2	

Groupe	CHASSIS
Code	33.04
Description	Kit coffre en cuir
Révision	1

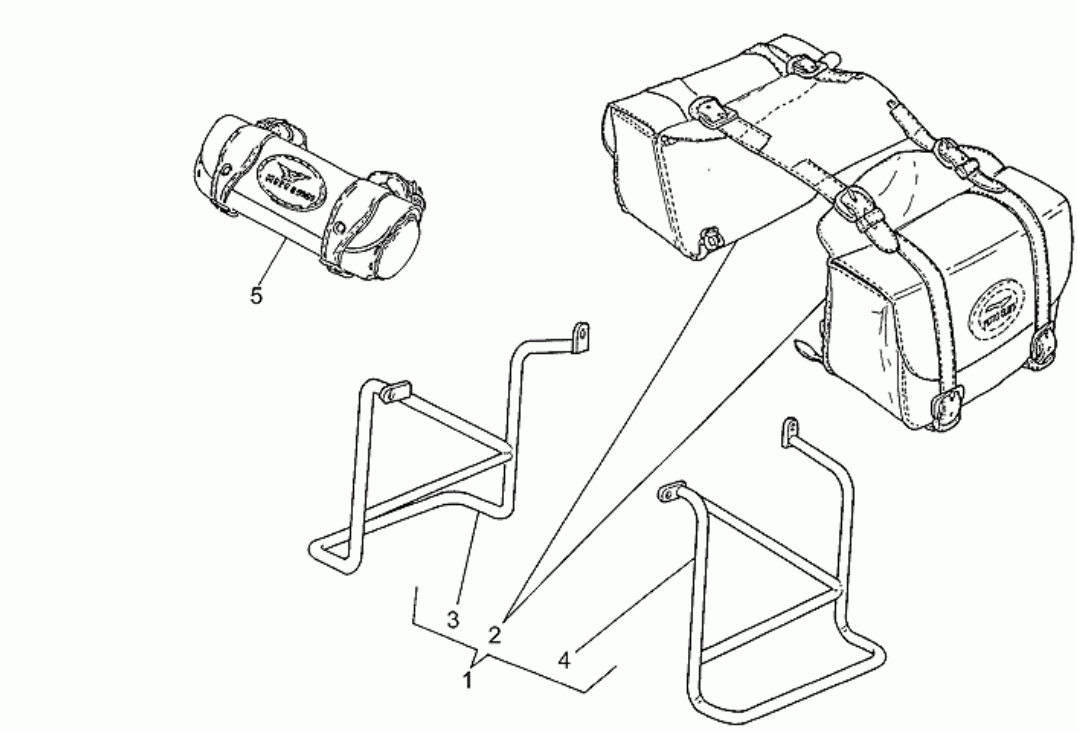

Pos.	Code	Description	Quant	Variants
1	GU31480062	Kit valises latérales	1	
2	GU31480462	Sacs latéraux - paire	1	
3	GU31486665	Support sac d.	1	
4	GU31486765	Support sac g.	1	
5	GU29479555	Trousse à outils	1	

Groupe	CHASSIS
Code	33.05
Description	Carrosserie
Révision	1

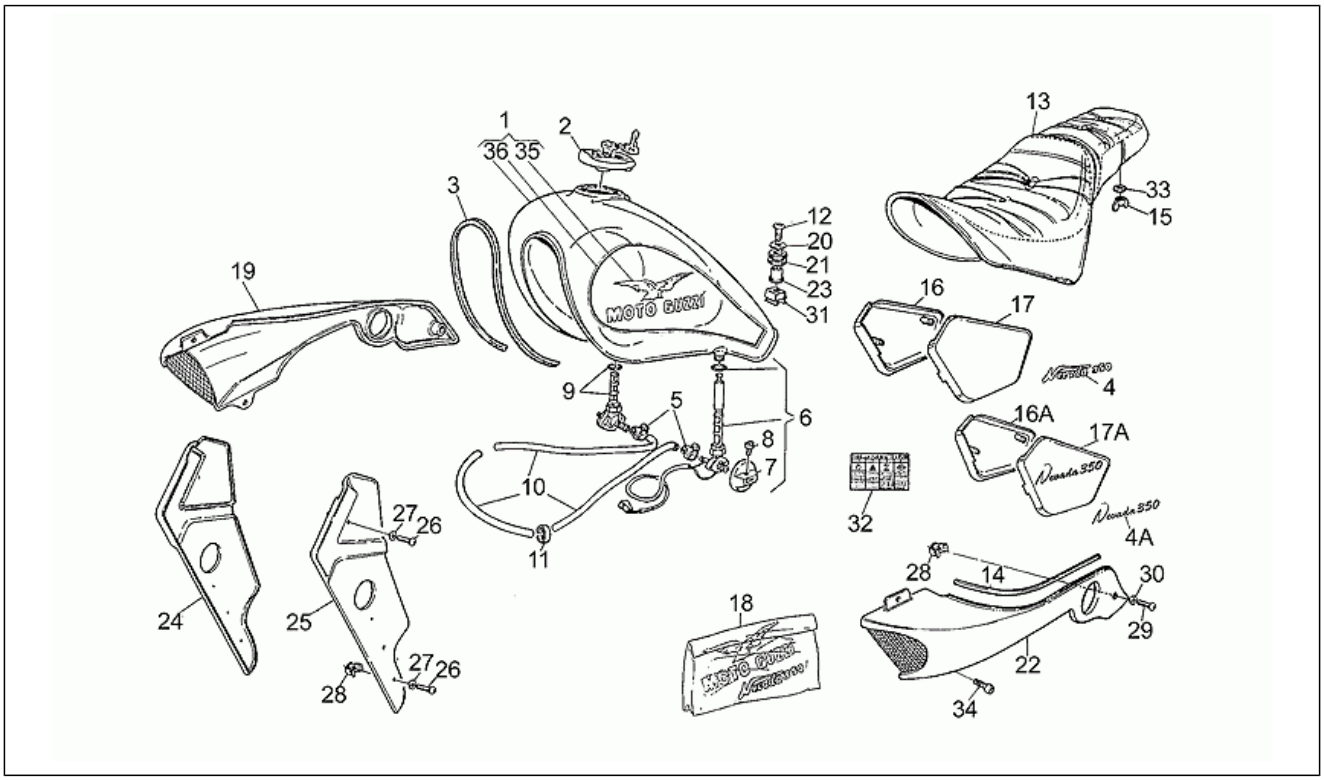

Pos.	Code	Description	Quant	Variants
1	GU311002651	Reservoir carburant	1	**Couleur véhicule:**Brut[gr]
1	GU31100266	Reservoir carburant	1	**Couleur véhicule:**Shiny black 532[l.b]
1	GU31100267	Reservoir carburant	1	**Couleur véhicule:**Nacht blau blue 228[b.], Gold 044[g.]
1	GU31100270	Reservoir carburant	1	**Année:**1996[T] **Couleur véhicule:**Vert[gn]
1	GU31100271	Reservoir carburant	1	**Année:**1996[T] **Couleur véhicule:**Nacht blau blue 228[b.]
1	GU31100272	Reservoir carburant	1	**Année:**1996[T] **Couleur véhicule:**Amaranth red 142[a.r]
1	GU31100285	Reservoir carburant	1	**Couleur véhicule:**Cherry red 141[c.r]
1	GU31100286	Reservoir carburant	1	**Couleur véhicule:**Shiny black 532[l.b], Yellow 045[y.]
1	GU31100289	Reservoir carburant	1	**Année:**1995[S] **Couleur véhicule:**Cherry red 141[c.r], Shiny black 532[l.b] **Spécifications techniques:**See technical comm.n.301 of 1995[30195C]
2	GU30103960	Bouchon réservoir essence	1	
3	GU00823931070	Joint	1	
4	GU31922085	Décalco "Nevada 350"	2	**Spécifications techniques:**Gold/red decal[D1]
4	GU31922086	Décalco "Nevada 350"	2	**Spécifications techniques:**Gold/black decal[D2]
4	GU31922087	Décalco "Nevada 350"	2	**Année:**1996[T] **Spécifications techniques:**Gold/black decal[D2]
5	GU93305017	Collier	2	
6	GU31105460	Robinet ess. g.	1	
7	GU29105750	Poignée	2	
8	GU98200306	Vis	2	
9	GU31105360	Robinet ess. d.	1	
10	GU00823956080	Tuyau caoutchouc 12,5X7,8 5/16"	1	
11	GU28157950	Collier clic 12,5x8	4	
12	GU98230822	Vis sup.	1	
13	GU31460561	Selle	1	

Groupe	CHASSIS
Code	33.05
Description	Carrosserie
Révision	1

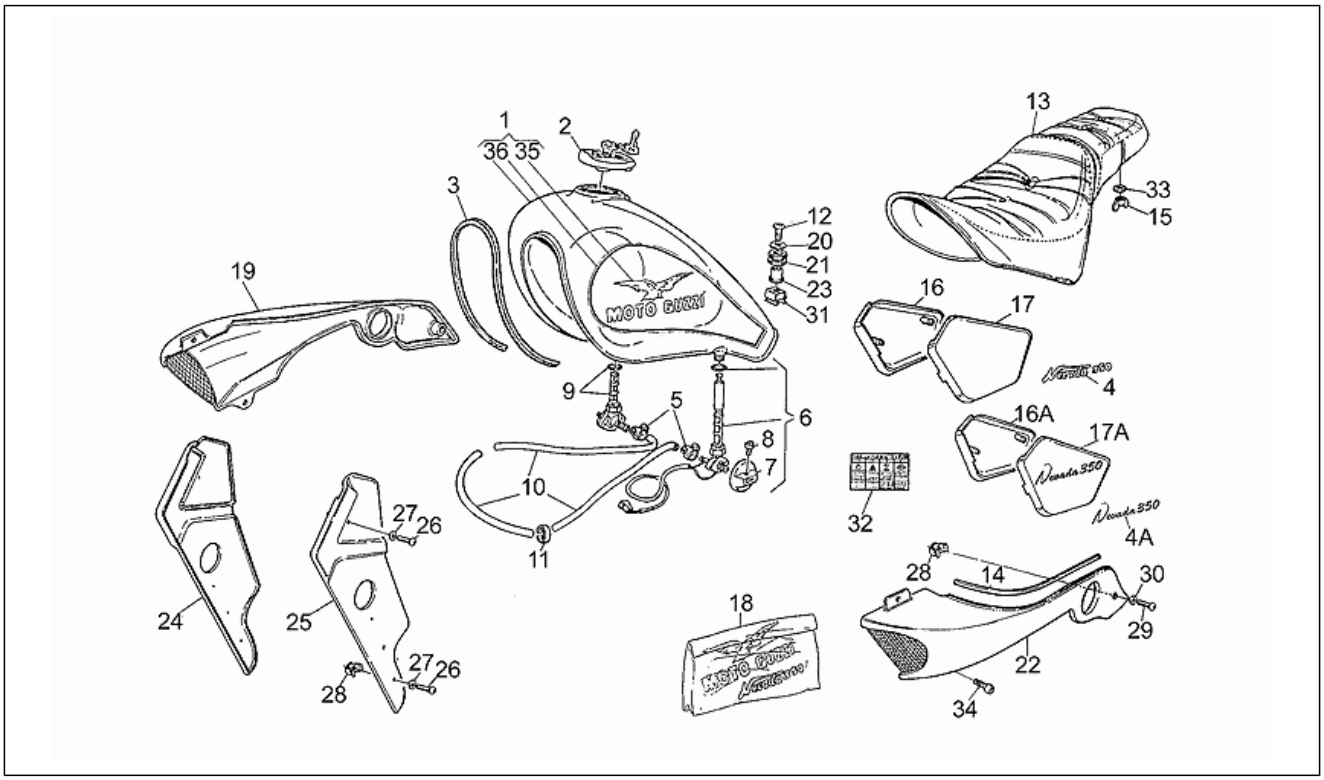

Pos.	Code	Description	Quant	Variants
14	GU00823931070	Joint	1	
15	GU92670206	Ecrou	2	
16	GU234762101	Recouvrement d.brut	1	**Couleur véhicule:**Brut[gr]
16	GU31476266	Aile D	1	**Année:**1995[S] **Couleur véhicule:**Shiny black 532[l.b] **Spécifications techniques:**See technical comm.n.301 of 1995[30195C]
16	GU31476267	Flanc D sans décalco	1	**Couleur véhicule:**Nacht blau blue 228[b.]
16	GU31476285	Flanc D sans décalco	1	**Couleur véhicule:**Cherry red 141[c.r]
16	GU89000074	Aile D	1	**Année:**1996[T] **Couleur véhicule:**Vert[gn]
16	GU89000075	Aile D	1	**Année:**1996[T] **Couleur véhicule:**Nacht blau blue 228[b.]
16	GU89000076	Aile D	1	**Année:**1996[T] **Couleur véhicule:**Amaranth red 142[a.r]
17	GU314763621	Recouvrement g.brut	1	**Couleur véhicule:**Brut[gr]
17	GU31476366	Aile G	1	**Année:**1995[S] **Couleur véhicule:**Shiny black 532[l.b] **Spécifications techniques:**See technical comm.n.301 of 1995[30195C]
17	GU31476367	Flanc D sans décalco	1	**Couleur véhicule:**Nacht blau blue 228[b.]
17	GU31476385	Flanc G sans décalco	1	**Couleur véhicule:**Cherry red 141[c.r]
17	GU89000077	Aile G	1	**Année:**1996[T] **Couleur véhicule:**Vert[gn]
17	GU89000078	Aile G	1	**Année:**1996[T] **Couleur véhicule:**Nacht blau blue 228[b.]
17	GU89000079	Aile G	1	**Année:**1996[T] **Couleur véhicule:**Amaranth red 142[a.r]
18	GU31923365	Décalco série	1	**Spécifications techniques:**Gold/red decal[D1]
18	GU31923366	Décalco série	1	**Spécifications techniques:**Gold/black decal[D2]
18	GU31923370	Décalco série	1	**Année:**1996[T]

Groupe	CHASSIS
Code	33.05
Description	Carrosserie
Révision	1

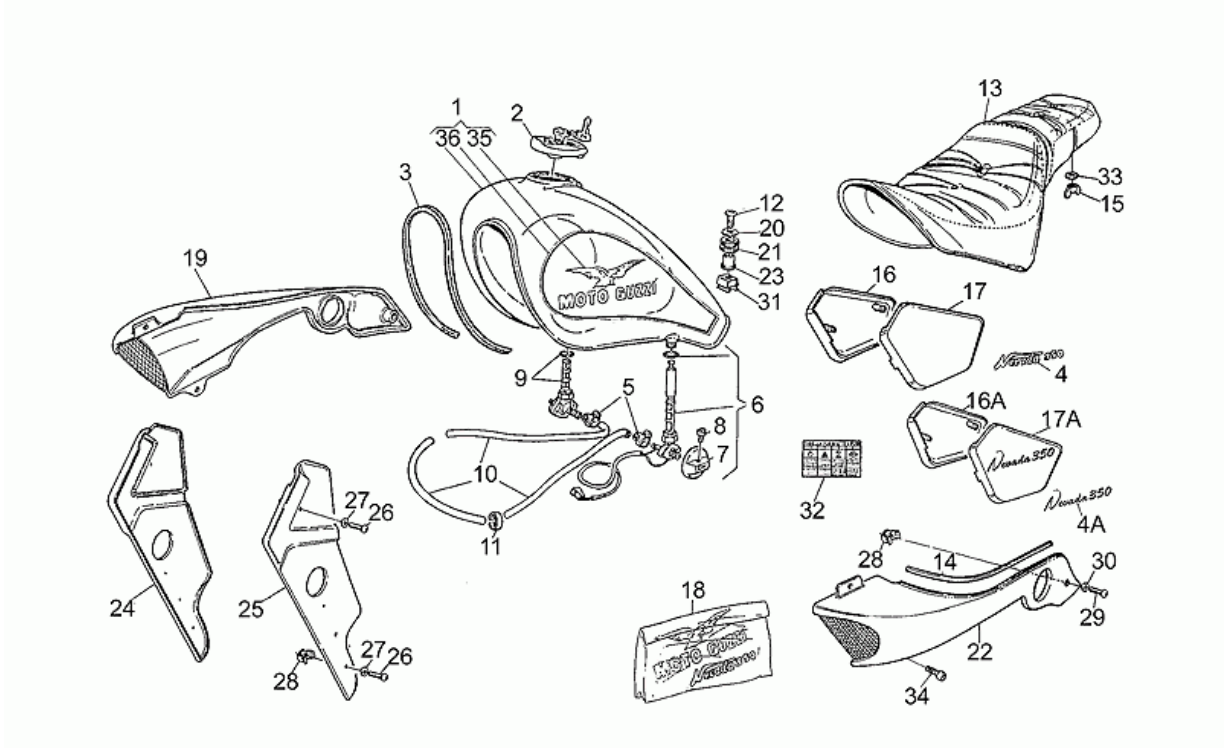

Pos.	Code	Description	Quant	Variants
				Spécifications techniques: Gold/black decal[D2]
19	GU31570665	Flanc D cpl. chrome	1	
20	GU95100256	Rondelle	1	
21	GU91551131	Caoutchouc	1	
22	GU31570765	Flanc G cpl. chrome	1	
23	GU31103565	Entretoise	1	
24	GU31575365	Cloison avant d.noir	1	
25	GU31575465	Cloison avant g.noir	1	
26	GU98230620	Vis	4	
27	GU95001206	Rondelle	4	
28	GU92660601	Ecrou en cage	8	
29	GU98230626	Vis 6X25	2	
30	GU95100121	Rondelle 5,3x10x0,5	4	
31	GU92660801	Ecrou en cage	1	
32	GU31945467	Décal tabelle fusibles	1	
33	GU93110082	Caoutchouc	2	
34	GU98230621	Vis	2	
35	GU19917535	Déc."MotoGuzzi" or/noire	2	**Spécifications techniques:**Gold/black decal[D2]
35	GU30917501	Décalco "Moto Guzzi"	2	**Spécifications techniques:**Gold/red decal[D1]
35	GU30917860	Déc.d. "Moto Guzzi" or/noire	1	**Année:**1996[T]
35	GU30917960	Déc.g. "Moto Guzzi" or/noire	1	**Année:**1996[T]
36	GU30925510	Décalco ligne rouge	2	
36	GU30925512	Décalco ligne bleue	2	
36	GU71920518	Décalco ligne bleue	2	

Groupe	CHASSIS
Code	33.06
Description	Béquille
Révision	1

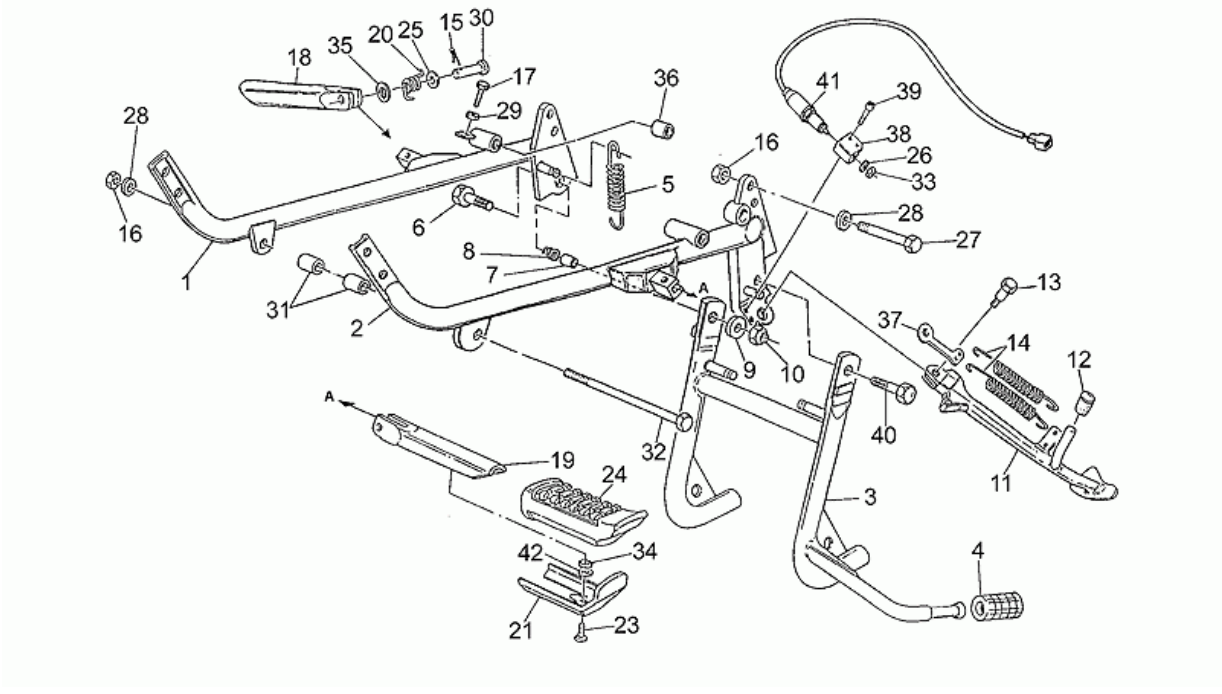

Pos.	Code	Description	Quant	Variants
1	GU31420381	Bras d.	1	**Spécifications techniques:**See technical comm.n.289 of 1995[28995C]
2	GU31422181	Bras g.	1	**Spécifications techniques:**See technical comm.n.289 of 1995[28995C]
3	GU23430370	Béquille centrale	1	
4	GU13432640	Pédale en caoutch.	1	
5	GU12434001	Ressort rappel béq.	2	
6	GU98054530	Vis	1	
7	GU91181114	Entretoise	2	
8	GU94322215	Ressort	2	
9	GU95000210	Rondelle	3	
10	GU92630510	Ecrou M10x1,5	2	
11	GU31432160	Béquille latérale chrome	1	
12	GU14423800	Caoutchouc	1	
13	GU99105129	Pivot	1	
14	GU17434060	Ressort	2	
15	GU95401215	Goupille	2	
16	GU92602210	Ecrou	3	
17	GU98054322	Vis	1	
18	GU23440710	Tuyau rep.-pieds av.d.	1	
19	GU23441810	Tuyau rep.-pieds av.g.	1	
20	GU23441110	Ressort	2	
21	GU23441210	Plaque	2	
23	GU98054314	Vis	2	
24	GU23443210	Pédale en caoutch.	2	
25	GU95000208	Rondelle	2	
26	GU61270300	Rondelle élastique 8x15x0,3	1	
27	GU98052565	Vis	2	

PIAGGIO&C.s.p.a.

Groupe	CHASSIS
Code	33.06
Description	Béquille
Révision	1

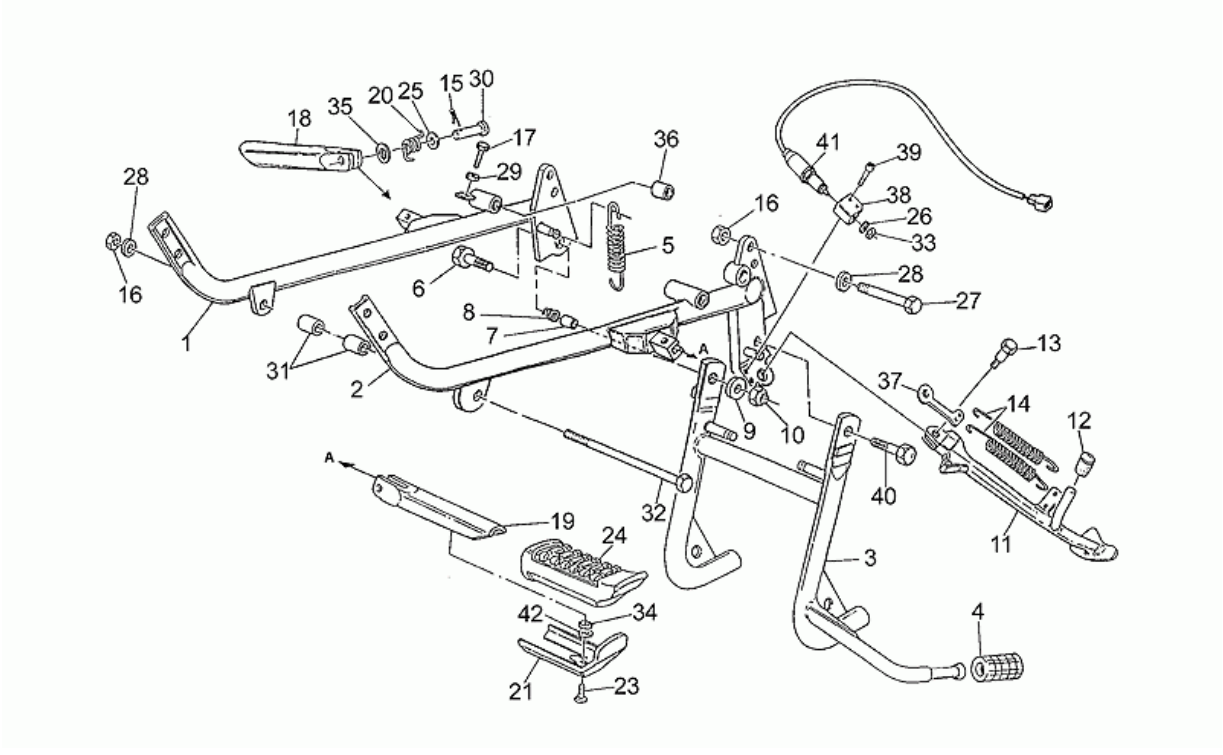

Pos.	Code	Description	Quant	Variants
28	GU95004210	Rondelle 10,2x18x2	3	
29	GU92602206	Ecrou	1	
30	GU23442210	Pivot	2	
31	GU19017000	Bague	2	
32	GU53429500	Pivot M10x250	1	
33	GU92602508	Ecrou M8x1	1	
34	GU91180602	Entretoise	2	
35	GU95129130	Rondelle élastique	2	
36	GU28252060	Douille 18 mm est.	4	
37	GU28432760	Plaquette	1	
38	GU31759360	Plaquette	1	
39	GU98612110	Vis	2	
40	GU98052535	Vis	1	
41	GU29759150	Interrupteur béquille	1	
42	GU61013800	Rondelle spéciale	2	

Groupe	CHASSIS
Code	33.07
Description	Couple conique AR
Révision	1

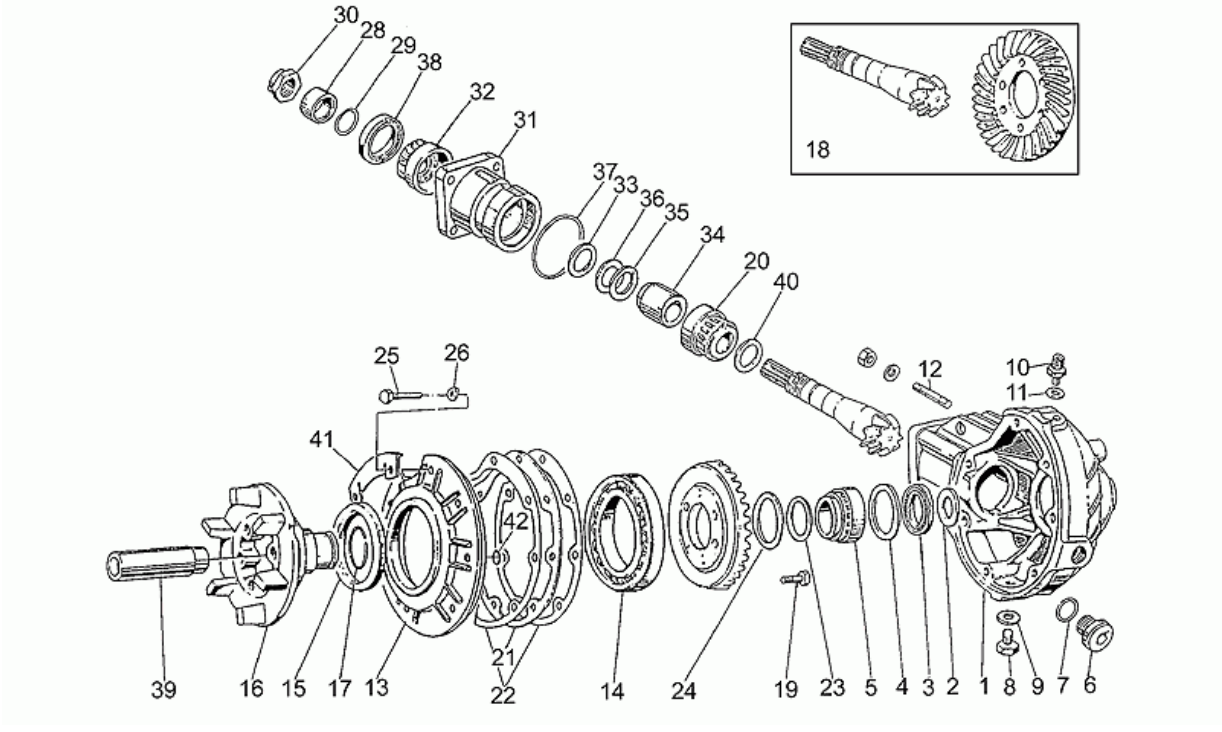

Pos.	Code	Description	Quant	Variants
1	GU19350362	Couvercle	1	
1	GU31350380	Carter de transmission gris	1	**Année:**1995[S], 1996[T], 1997[V], 1998[W], 1999[X], 2000[Y] **Spécifications techniques:**See technical comm.n.302 of 1995[30295C]
2	GU19351900	Rondelle d'appui	1	
3	GU90403547	Bague d'étanchéité 35x47x7	1	
4	GU19351100	Rondelle d'appui	1	
5	GU92252235	Roulement à rouleaux 35x50x17	1	
6	GU19351200	Bouchon huile	1	
7	GU90706203	Joint torique 20,24X2,62	1	
8	GU31003766	Bouchon vid.huile M10x1	1	
9	GU10528900	Garniture	1	
10	GU19206501	Bouchon purge	1	
11	GU10528900	Garniture	1	
12	GU96508055	Vis sans tête	4	
13	GU27350410	Couvercle	1	
14	GU92201070	Roulement à billes 70x110x13	1	
15	GU90407590	Bague d'étanchéité 75x90x8	1	
16	GU19351401	Pivot	1	
17	GU90353030	Bague de butée	1	
18	GU19354621	Couple conique Z=8/31	1	
19	GU19356320	Vis	6	
20	GU92249223	Roulement roul.con.	1	
21	GU19355400	Cale 0,8 mm	1	
21	GU19355402	Cale 0,9 mm	1	
21	GU19355404	Cale 1 mm	1	
21	GU19355406	Cale 1,1 mm	1	
21	GU19355408	Cale 1,2 mm	1	

Groupe	CHASSIS
Code	33.07
Description	Couple conique AR
Révision	1

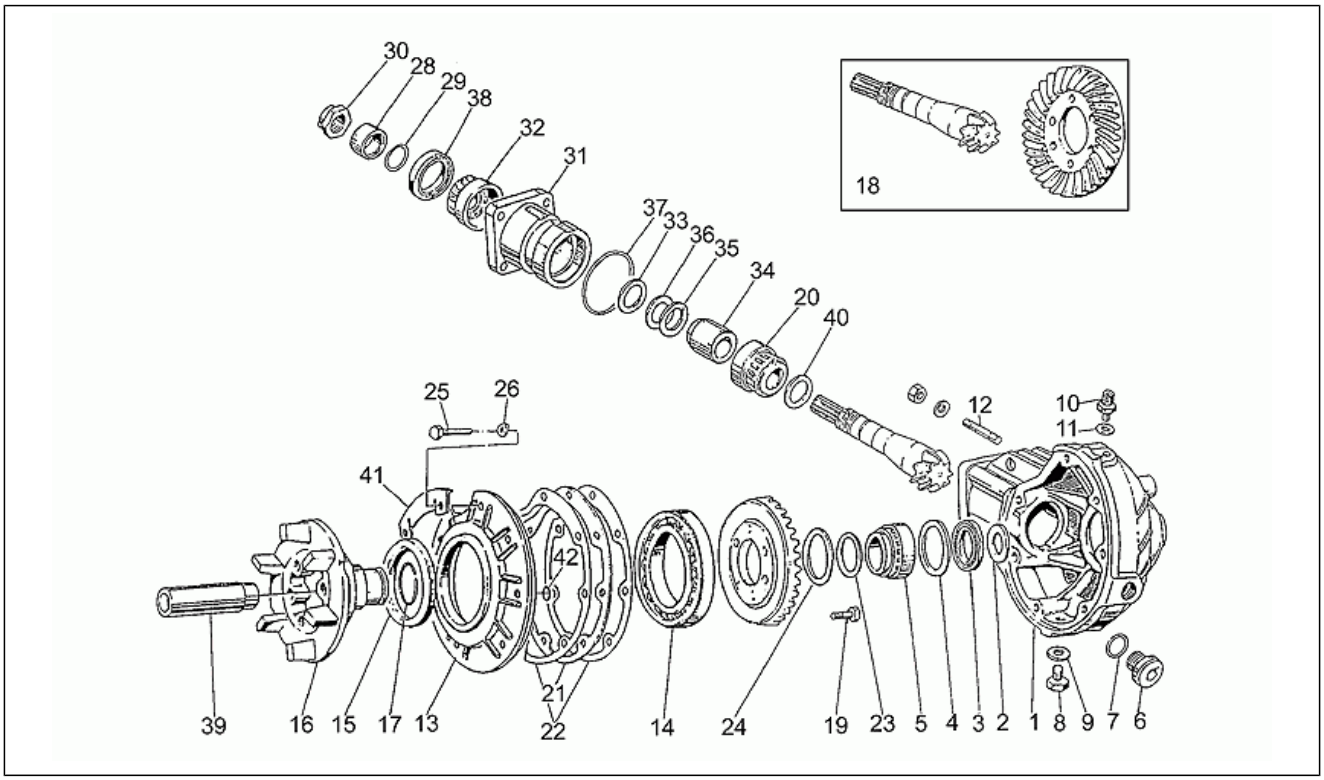

Pos.	Code	Description	Quant	Variants
21	GU19355410	Cale 1,3 mm	1	
21	GU19355411	Cale 1,4 mm	1	
21	GU19355412	Cale 1,5 mm	1	
21	GU19355413	Cale 1,6 mm	1	
22	GU19350700	Joint	2	
23	GU19352300	Rondelle éventail	1	
24	GU19353500	Rondelle éventail	1	
25	GU19357660	Vis	7	
26	GU61270300	Rondelle élastique 8x15x0,3	7	
28	GU19356801	Entretoise	1	
29	GU90706188	Bague d'étanchéité 18,77X1,78	1	
30	GU19356700	Ecrou	1	
31	GU19352401	Habillage roulement	1	
32	GU92249220	Roulement à rouleaux 20x47x14	1	
33	GU19355300	Cale 1 mm	2	
33	GU19355301	Cale 1,1 mm	2	
33	GU19355302	Cale 1,2 mm	2	
33	GU19355303	Cale 1,3 mm	2	
33	GU19355304	Cale 1,4 mm	2	
33	GU19355305	Cale 1,5 mm	2	
33	GU19355306	Cale 1,6 mm	2	
33	GU19355307	Cale 1,7 mm	2	
33	GU19355308	Cale 1,8 mm	2	
33	GU19355309	Cale 1,9 mm	2	
34	GU19355121	Entretoise	1	
35	GU19355200	Rondelle ajustem. 0,1 mm	1	
36	GU19355202	Rondelle ajustem. 0,15 mm	1	
37	GU90706552	Bague d'étanchéité	1	

Groupe	CHASSIS
Code	33.07
Description	Couple conique AR
Révision	1

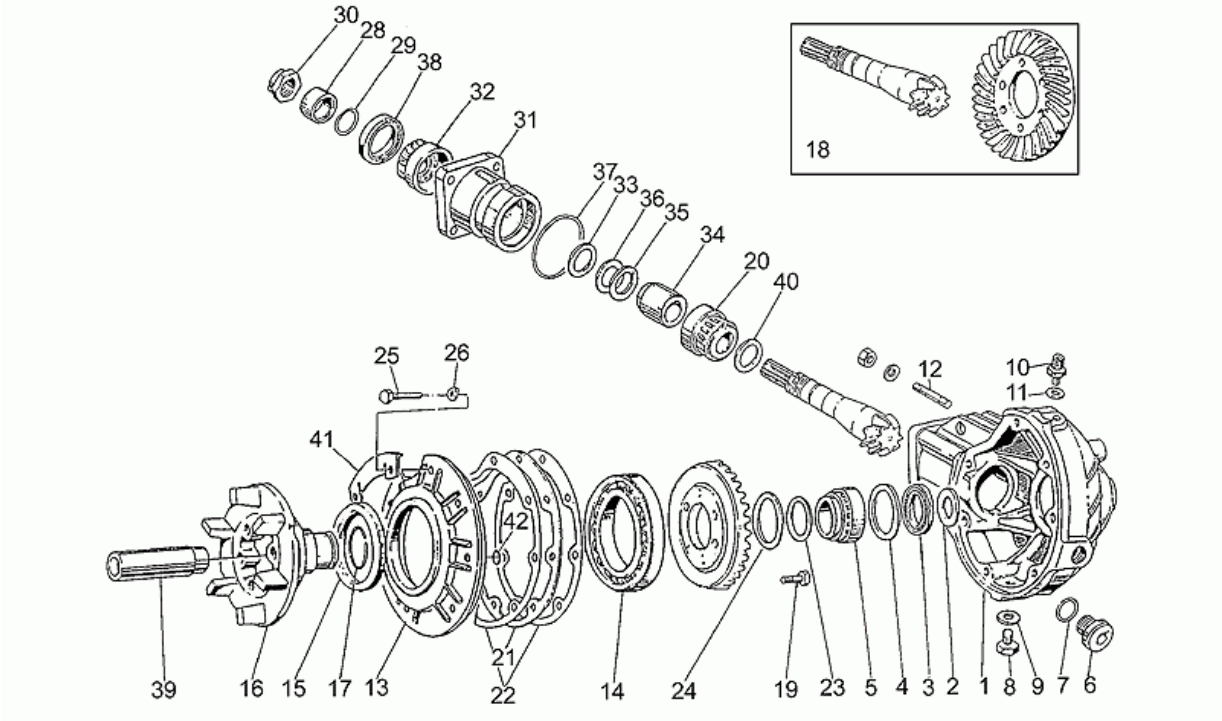

Pos.	Code	Description	Quant	Variants
38	GU90403247	Bague d'étanchéité	1	
39	GU27634110	Entretoise	1	
40	GU19355320	Cale 1 mm	1	
40	GU19355321	Cale 1,1 mm	1	
40	GU19355322	Cale 1,2 mm	1	
40	GU19355323	Cale 1,3 mm	1	
40	GU19355324	Cale 1,4 mm	1	
40	GU19355325	Cale 1,5 mm	1	
40	GU19355326	Cale 1,6 mm	1	
40	GU19355327	Cale 1,7 mm	1	
40	GU19355328	Cale 1,8 mm	1	
40	GU19355329	Cale 1,9 mm	1	
41	GU27357411	Plaquette	1	
42	GU90706076	Joint torique	2	

Groupe	CHASSIS
Code	33.08
Description	Couvre-châssis
Révision	1

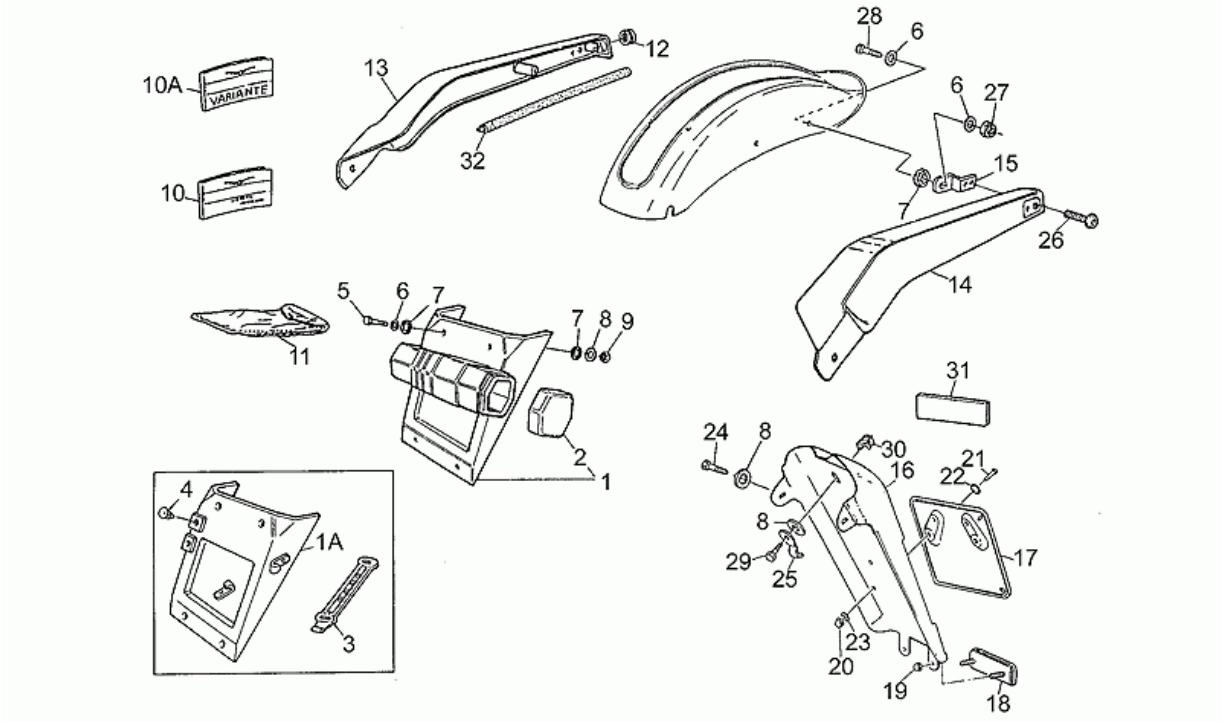

Pos.	Code	Description	Quant	Variants
1	GU31438665	Bavette anti-éclaboussures	1	**Spécifications techniques:**Second series[2A], Digiplex[DX]
1	GU31479561	Bavette anti-éclab. cpl.	1	**Spécifications techniques:**First series[1A]
2	GU27914615	Couvercle	1	**Spécifications techniques:**First series[1A]
3	GU29728960	Elastique de fixation	1	**Spécifications techniques:**Digiplex[DX]
4	GU93180060	Caoutchouc	2	
5	GU98054325	Vis	2	
6	GU95000206	Rondelle	6	
7	GU93110060	Caoutchouc	10	
8	GU95100141	Rondelle 6,4x12x1,2	9	
9	GU92630106	Ecrou M6x1	4	
10	GU31900060	Livret d'util.et entret.	1	**Pays:**Italie[I]
10	GU31900061	Livret d'util.et entret.	1	**Pays:**Allemagne[D], France[F], Angleterre[UK]
10	GU31900065	Livret d'util.et entret.	1	**Pays:**Allemagne[D], France[F], Italie[I], Angleterre[UK]
11	GU28929940	Trousse à outils	1	
12	GU91551085	Caoutchouc	2	
13	GU31457865	Protection cadre d.	1	
14	GU31459165	Protection cadre g.	1	
15	GU31575565	Bride	2	
16	GU31438065	Rallonge porte-plaque	1	
17	GU39474600	Porte-plaque	1	
18	GU31745865	Catadioptre	1	
19	GU92630104	Ecrou M4x0,7	2	
20	GU92630105	Ecrou	4	
21	GU98054212	Vis	4	
22	GU90706035	Joint torique	4	
23	GU95000205	Rondelle	4	
24	GU98054312	Vis	3	
25	GU93301175	Cavalier	1	

Groupe	CHASSIS
Code	33.08
Description	Couvre-châssis
Révision	1

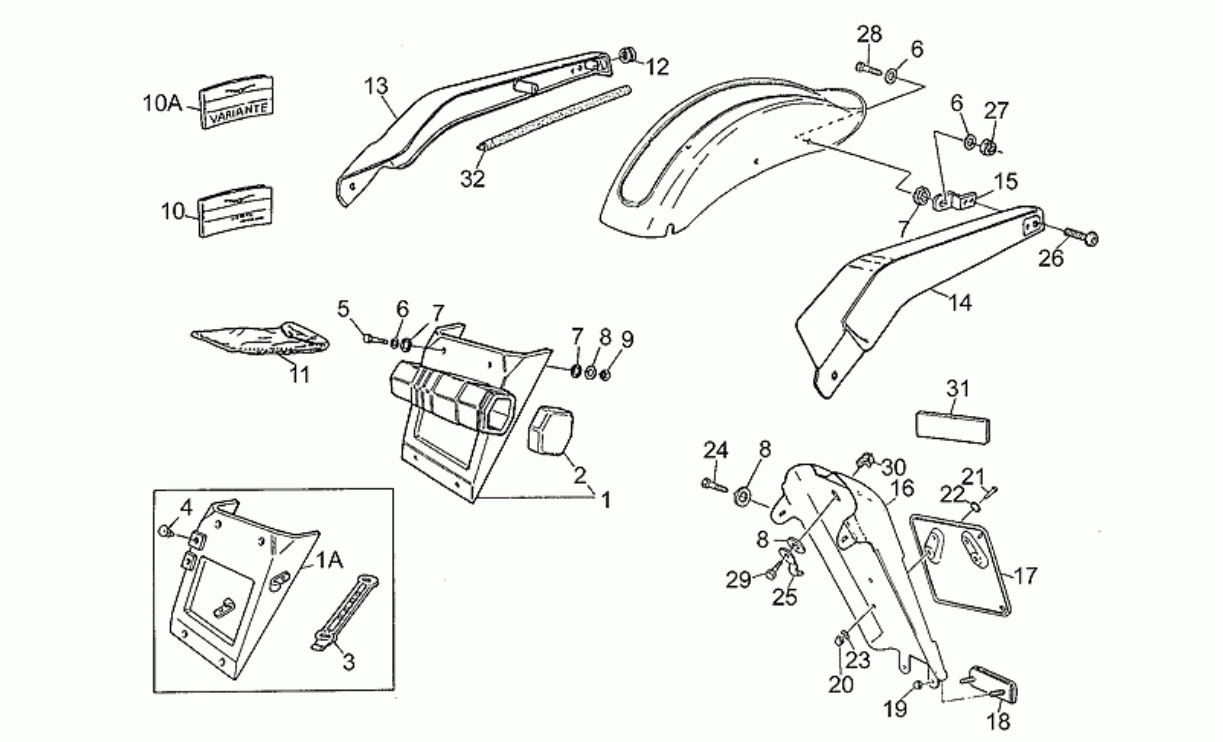

Pos.	Code	Description	Quant	Variants
26	GU98231023	Vis	2	
27	GU92630206	Ecrou M6x1	2	
28	GU98054314	Vis	2	
29	GU98054318	Vis	1	
30	GU92660601	Ecrou en cage	3	
31	GU29579460	Garniture adhesif	1	
32	GU00823931070	Joint	1	

Groupe	CHASSIS
Code	33.09
Description	Tableau de bord
Révision	1

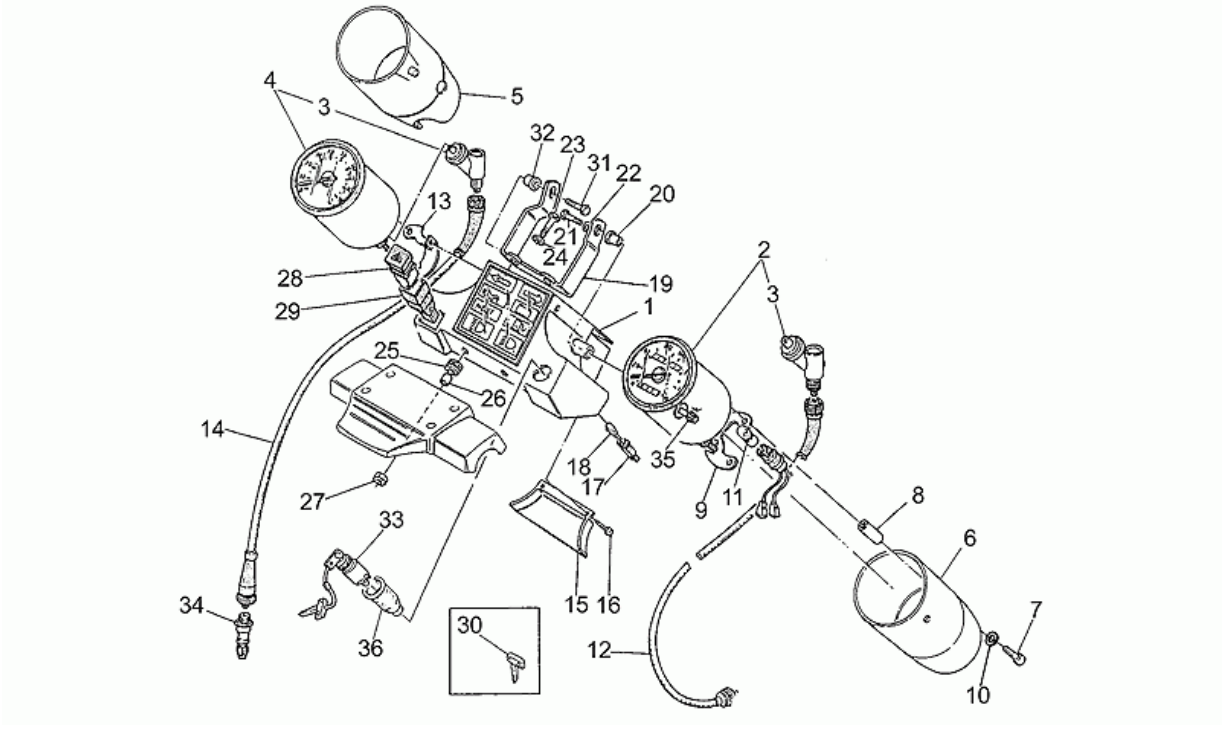

Pos.	Code	Description	Quant	Variants
1	GU23760010	Boîtier tableau de bord cpl.	1	
2	GU23762470	Compteur kilométrique	1	**Pays:**Angleterre[UK]
2	GU31761560	Compteur kilométrique	1	
3	GU23768310	Renvoi 60°	2	
4	GU23767270	Compte-tours	1	**Pays:**Angleterre[UK]
4	GU31767260	Compte-tours	1	
5	GU23761910	Boîtier compte-tours	1	
6	GU23762010	Boîtier tachymètre	1	
7	GU98622214	Vis	2	
8	GU23765110	Entretoise	2	
9	GU23764910	Plaque	1	
10	GU95020105	Rondelle 5,3x8,9x2,4	2	
11	GU17762150	Lampe (ou Ampoule) 12V-3W	2	
12	GU27760410	Transmission tachymètre	1	
13	GU23766510	Plaque	1	
14	GU23768110	Transmission compte-tours	1	
15	GU29765250	Couvercle inférieure	1	
16	GU99210210	Vis taraud	2	
17	GU19768680	Porte-ampoule	8	
18	GU93450140	Lampe (ou Ampoule)	8	
19	GU31764165	Cavalier	1	
20	GU23766911	Entretoise	1	
21	GU98054230	Vis	1	
22	GU95004205	Rondelle	2	
23	GU98054325	Vis	2	
24	GU95004206	Rondelle 6,15x11x0,8	2	
25	GU91551167	Caoutchouc 8x18	2	
26	GU91180617	Entretoise 6,2x8x13,5	2	

Groupe	CHASSIS
Code	33.09
Description	Tableau de bord
Révision	1

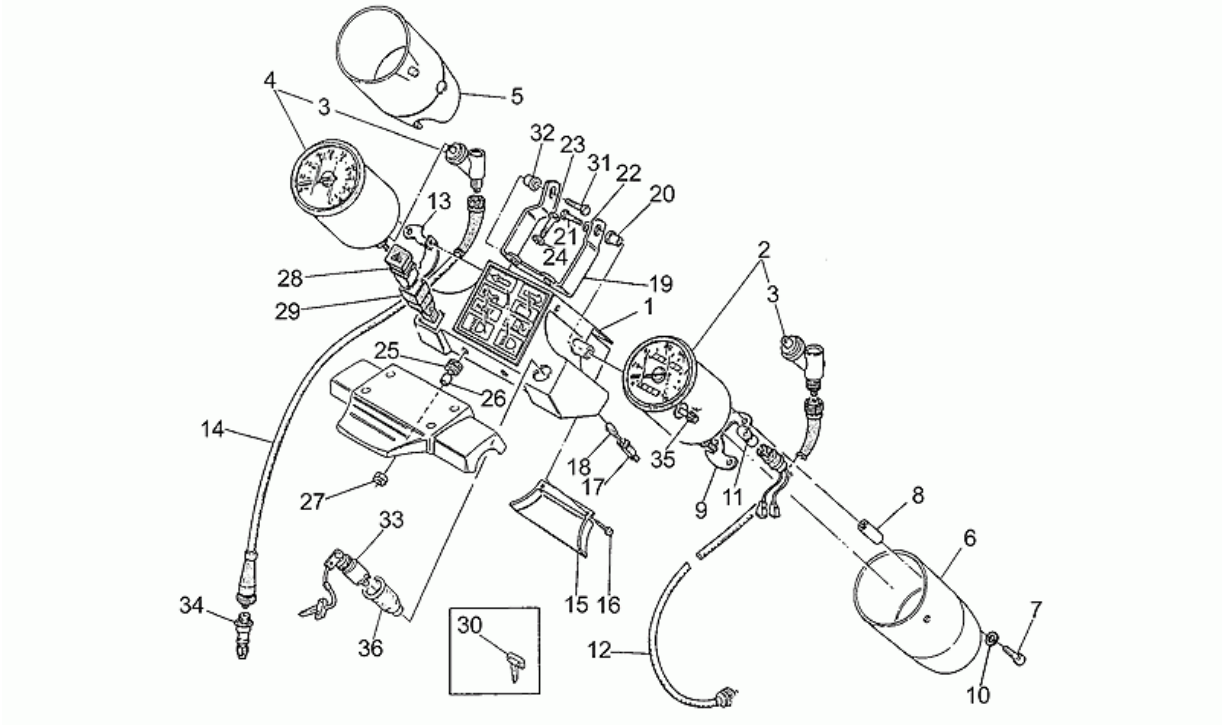

Pos.	Code	Description	Quant	Variants
27	GU92630106	Ecrou M6x1	2	
28	GU28745761	Turn indicator switch	1	
29	GU35755780	Protection caoutch.	1	
30	GU31735560	Clé non fraisée	1	
31	GU98054230	Vis	1	
32	GU23766910	Entretoise	1	
33	GU31735360	Bloc démarreur	1	
34	GU14769200	Renvoi Z=14	1	
35	GU19762810	Poussoir RAZ	1	
36	GU19741336	Bague	1	

Groupe	CHASSIS
Code	33.10
Description	Phare avant-Klaxon
Révision	1

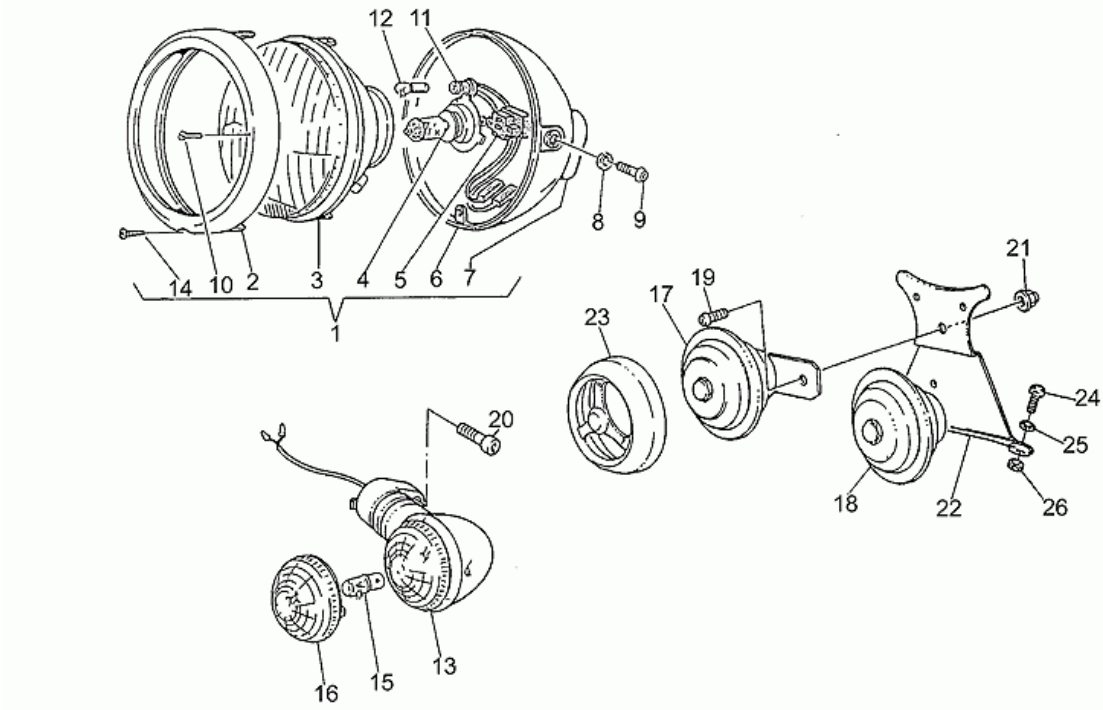

Pos.	Code	Description	Quant	Variants
1	GU28740533	Feu avant	1	
1	GU31740520	Phare avant	1	**Pays:**Angleterre[UK]
2	GU19740454	Cadre phare	1	
3	GU18740435	Groupe optique	1	
3	GU31740420	Groupe optique	1	**Pays:**Angleterre[UK]
4	GU93450232	Lampe (ou Ampoule) 12V-55/60W	1	
5	GU14756255	Porte-ampoule	1	
6	GU23740418	Corps feu AV	1	
7	GU19740404	Bouchon calotte AR	1	
8	GU95004210	Rondelle 10,2x18x2	2	
9	GU98231023	Vis	2	
10	GU19740303	Vis embrayage	1	
11	GU17740405	Porte-ampoule	1	
12	GU93450119	Lampe (ou Ampoule)	1	
13	GU31750665	Clignotant AV droite	1	
13	GU31750666	Clignotant avant gauche	1	**Pays:**Angleterre[UK]
14	GU19740302	Vis	1	
15	GU93450127	Lampe (ou Ampoule)	2	
16	GU31753765	Vitre clignotant	2	
17	GU31743765	Klaxon H	1	
18	GU31743766	Klaxon L	1	
19	GU98230816	Vis	1	
20	GU98612320	Vis	2	
21	GU92660208	Ecrou	1	
22	GU31744265	Plaq.sup. avert.son.	1	
23	GU31744765	Masque pour klaxon	2	
24	GU98230616	Vis	2	
25	GU95000206	Rondelle	2	

Groupe	CHASSIS
Code	33.10
Description	Phare avant-Klaxon
Révision	1

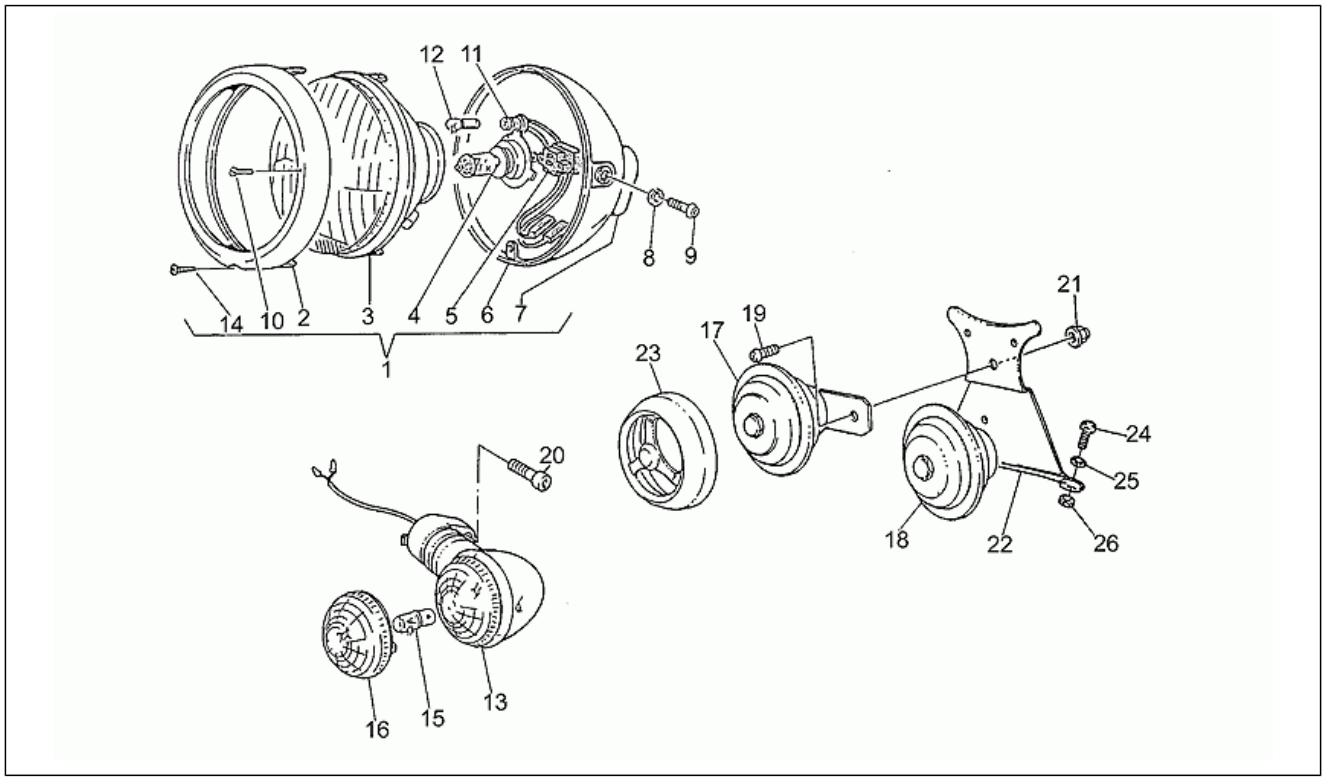

Pos.	Code	Description	Quant	Variants
26	GU92630106	Ecrou M6x1	2	

Groupe	CHASSIS
Code	33.11
Description	Feu arrière
Révision	1

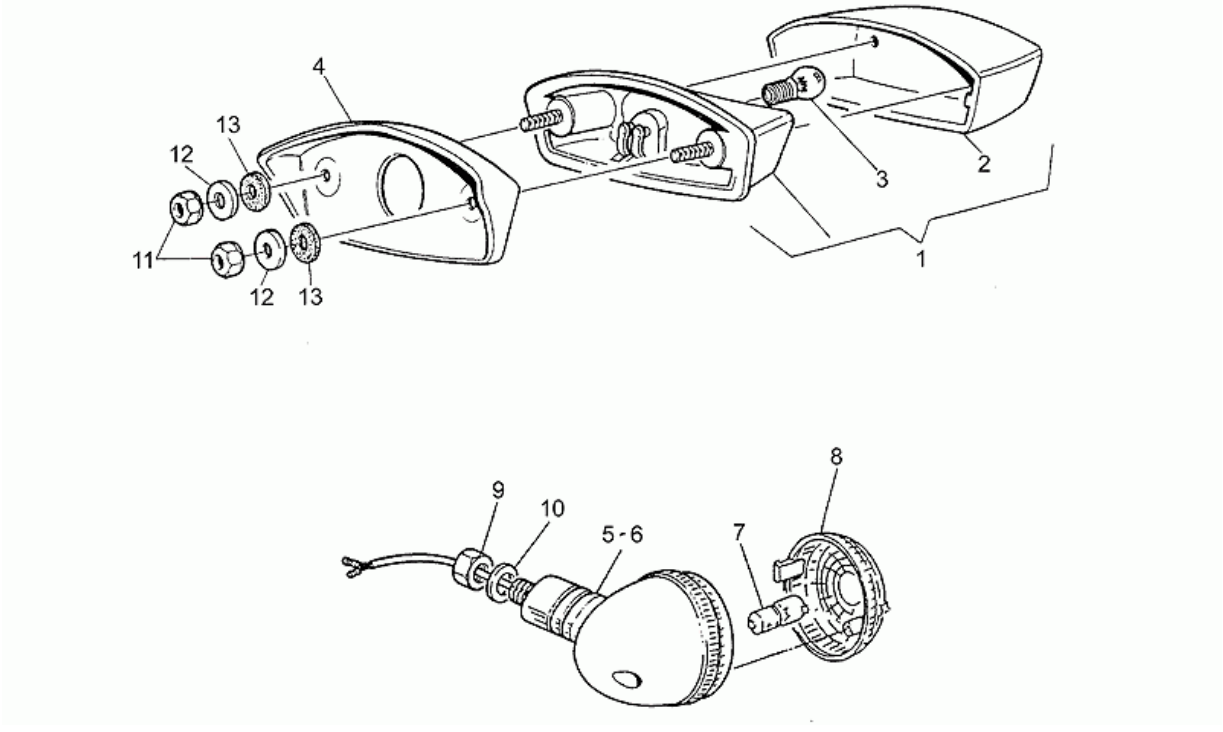

Pos.	Code	Description	Quant	Variants
1	GU31740960	Feu arrière	1	
2	GU31741760	Glace phare AR	1	
3	GU93450224	Lampe (ou Ampoule)	1	
4	GU31741260	Entretoise	1	
5	GU31751665	Clignotant arrière droit	1	
6	GU31751666	Clignotant arrière gouche	1	
7	GU93450127	Lampe (ou Ampoule)	2	
8	GU31753765	Vitre clignotant	2	
9	GU92602312	Ecrou	2	
10	GU95021112	Rondelle évent.	2	
11	GU92630106	Ecrou M6x1	2	
12	GU95000206	Rondelle	2	
13	GU93110060	Caoutchouc	2	

Groupe	CHASSIS
Code	33.12
Description	Filtre air
Révision	1

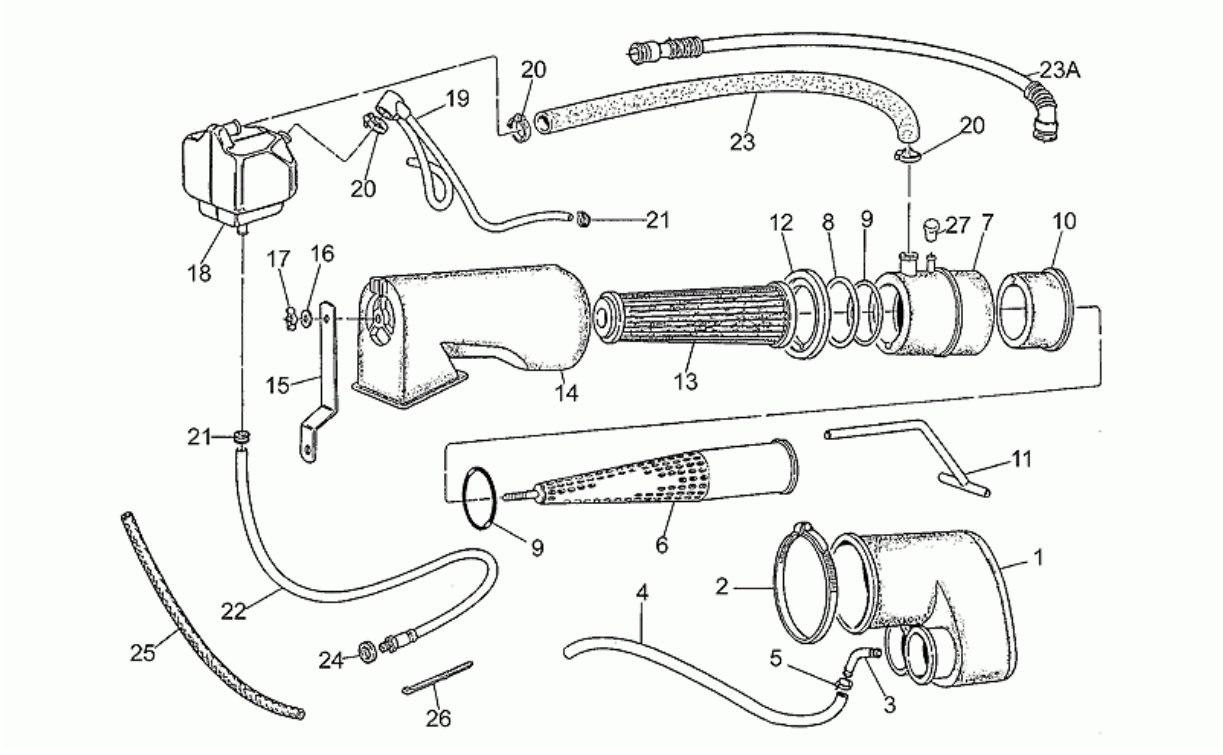

Pos.	Code	Description	Quant	Variants
1	GU19114300	Collecteur aspiration	1	
2	GU93305092	Collier	1	
3	GU17114650	Tuyau	1	
4	GU00823944050	Tuyau 5X9	1	
5	GU14609650	Collier 3,6x20,6	1	
6	GU31155780	Support filtre	1	
7	GU19156701	Manchon AV	1	
8	GU19113900	Joint	1	
9	GU90706552	Bague d'étanchéité	2	
10	GU19156900	Manchon AR	1	
11	GU19156001	Tuyau reniflard radiateur	1	
12	GU17113450	Bague	1	
13	GU17113651	Filtre air	1	
14	GU17114050	Couvercle filtre	1	
15	GU27114120	Plaque support	1	
16	GU95100059	Rondelle 5,25x14x1,5	1	
17	GU92670305	Ecrou	1	
18	GU27153460	Corp	1	
19	GU27159660	Reniflard	1	
20	GU93305018	Collier	3	
21	GU61108400	Collier	3	
22	GU27159360	Reniflard	1	
23	GU27157420	Tuyau	1	**Spécifications techniques:**From engine PC52305[M2]
23	GU30157430	Tuyau	1	**Spécifications techniques:**Up to engine PC52304[M1]
24	GU90714082	Joint	1	
25	GU00823923140	Gaine thermique	1	
26	GU61609630	Collier	1	
27	GU19433000	Caoutchouc de ferm.	1	

Groupe	CHASSIS
Code	33.13
Description	Fourche arriere
Révision	1

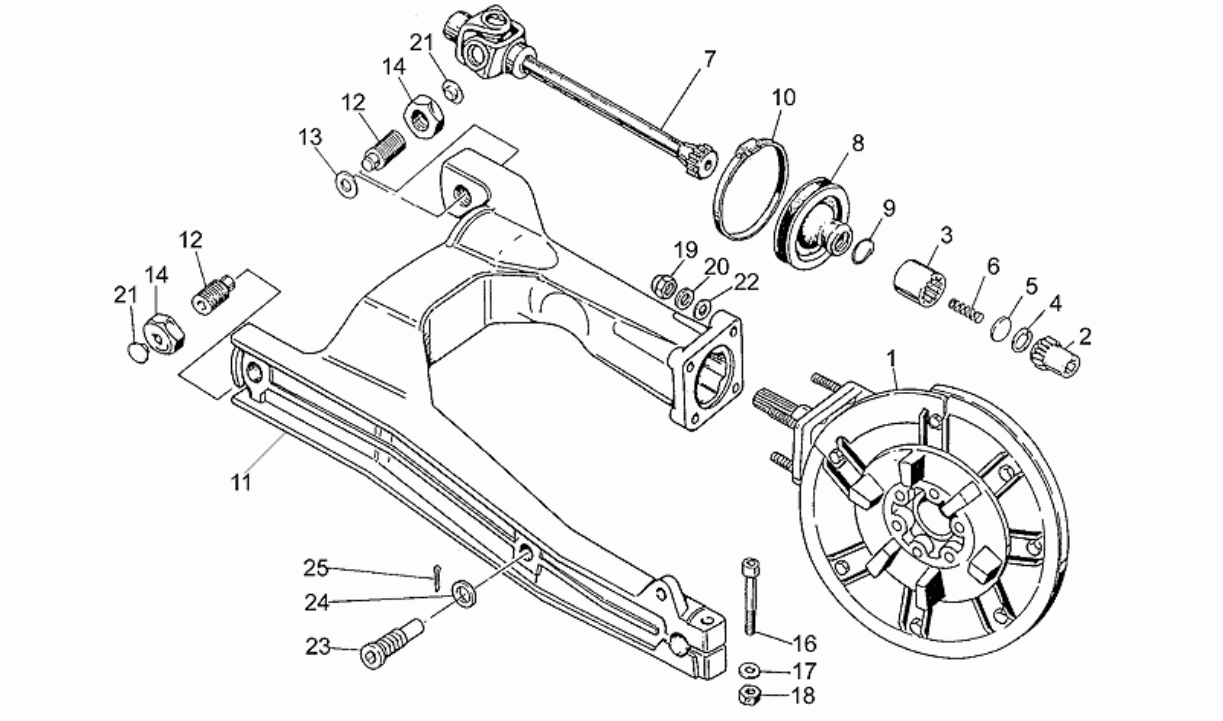

Pos.	Code	Description	Quant	Variants
1	GU31350260	Carter de transmission	1	
1	GU31350280	Carter de transm.compl.gris	1	**Année:**1995[S], 1996[T], 1997[V], 1998[W], 1999[X], 2000[Y] **Spécifications techniques:**See technical comm.n.302 of 1995[30295C]
2	GU19327701	Manchon	1	
3	GU19328801	Manchon	1	
4	GU90272023	Bague seeger	1	
5	GU19327601	Disque	1	
6	GU94321099	Ressort	1	
7	GU23328081	Joint	1	
8	GU23548080	Collier de protection	1	
9	GU23548180	Ressort	1	
10	GU93305074	Collier	1	
11	GU31540280	Fourche ar.gris	1	**Spécifications techniques:**See spare parts comm.n.030 of 1999[03099N], See technical comm.n.302 of 1995[30295C]
12	GU19547000	Pivot	2	
13	GU35214300	Cale	1	
14	GU14547800	Ecrou	2	
16	GU98620545	Vis	1	
17	GU95004210	Rondelle 10,2x18x2	1	
18	GU92602210	Ecrou	1	
19	GU92781081	Ecrou	4	
20	GU14615901	Rondelle 8,4X13X0,8	4	
21	GU93180105	Bouchon	2	
22	GU95004208	Rondelle	4	
23	GU31544160	Pivot	1	**Spécifications techniques:**See spare parts comm.n.030 of 1999[03099N]

Groupe	CHASSIS
Code	33.13
Description	Fourche arriere
Révision	1

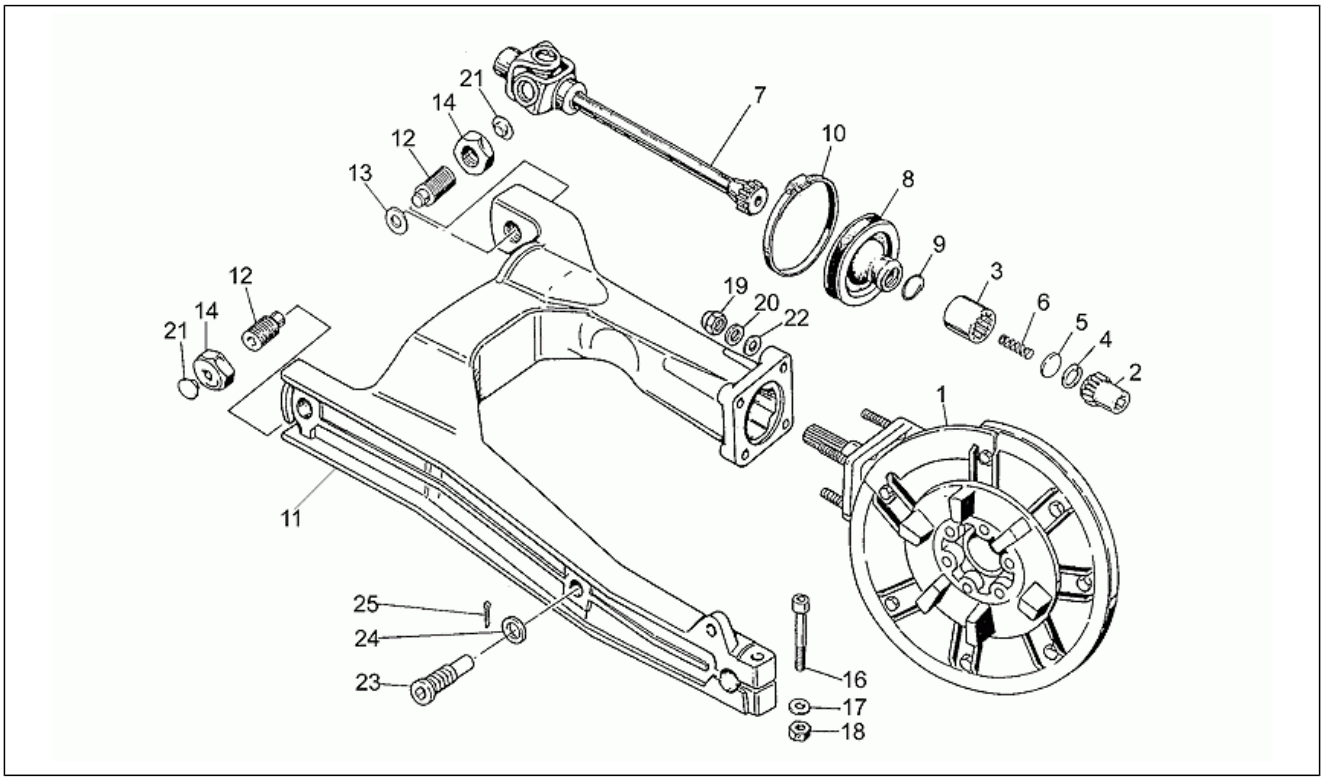

Pos.	Code	Description	Quant	Variants
24	GU95100523	Rondelle 14,5X20X1	1	**Spécifications techniques:**See spare parts comm.n.030 of 1999[03099N]
25	GU95500222	Goupille	1	**Spécifications techniques:**See spare parts comm.n.030 of 1999[03099N]

Groupe	CHASSIS
Code	33.14
Description	Circuit electrique I
Révision	1

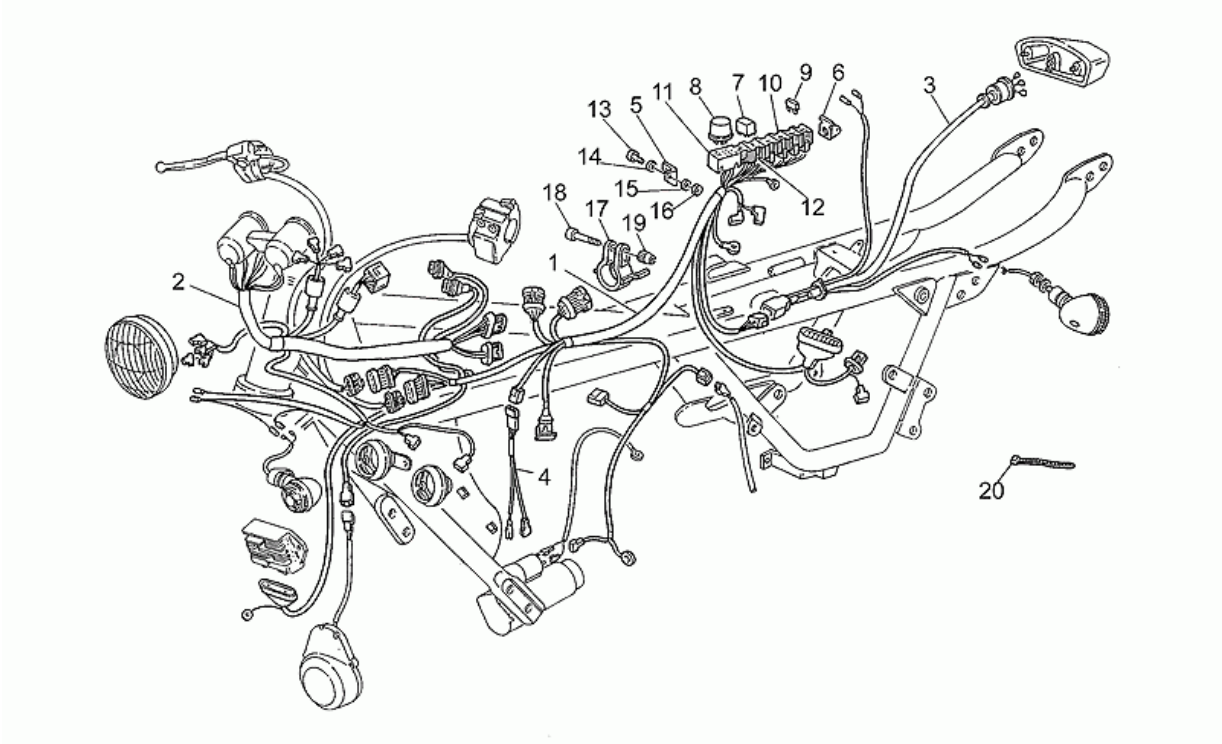

Pos.	Code	Description	Quant	Variants
1	GU31747167	Circuit electrique	1	**Spécifications techniques:**Up to frame LG12199[T1]
2	GU31747267	Câblage tableau de bord	1	**Spécifications techniques:**Up to frame LG12199[T1]
3	GU31747365	Câblage feu AR	1	**Spécifications techniques:**Up to frame LG12199[T1]
4	GU31724540	Câble capteur point mort	1	**Spécifications techniques:**Up to frame LG12199[T1]
5	GU30477101	Bride droite	1	**Spécifications techniques:**Up to frame LG12199[T1]
6	GU30477200	Plaque g.	1	**Spécifications techniques:**Up to frame LG12199[T1]
7	GU30732560	Relais Siemens A302/B1008	4	**Spécifications techniques:**Up to frame LG12199[T1]
8	GU17750520	Clignotement	1	**Spécifications techniques:**Up to frame LG12199[T1]
9	GU28742560	Fusible 15A	4	**Spécifications techniques:**Up to frame LG12199[T1]
10	GU30732200	Boîte à fusibles	4	**Spécifications techniques:**Up to frame LG12199[T1]
11	GU30756100	Support	1	**Spécifications techniques:**Up to frame LG12199[T1]
12	GU30732400	Support relais	4	**Spécifications techniques:**Up to frame LG12199[T1]
13	GU98622318	Vis	2	**Spécifications techniques:**Up to frame LG12199[T1]
14	GU95004206	Rondelle 6,15x11x0,8	2	**Spécifications techniques:**Up to frame LG12199[T1]
15	GU95100120	Rondelle	2	**Spécifications techniques:**Up to frame LG12199[T1]
16	GU92630206	Ecrou M6x1	2	**Spécifications techniques:**Up to frame LG12199[T1]
17	GU31749765	Collier	1	**Spécifications techniques:**Up to frame LG12199[T1]
18	GU61127520	Vis	1	**Spécifications techniques:**Up to frame LG12199[T1]
19	GU61127220	Bague	1	**Spécifications techniques:**Up to frame LG12199[T1]
20	GU14609650	Collier 3,6x20,6	1	**Spécifications techniques:**Up to frame LG12199[T1]

Groupe	CHASSIS
Code	33.15
Description	Circuit electrique II
Révision	1

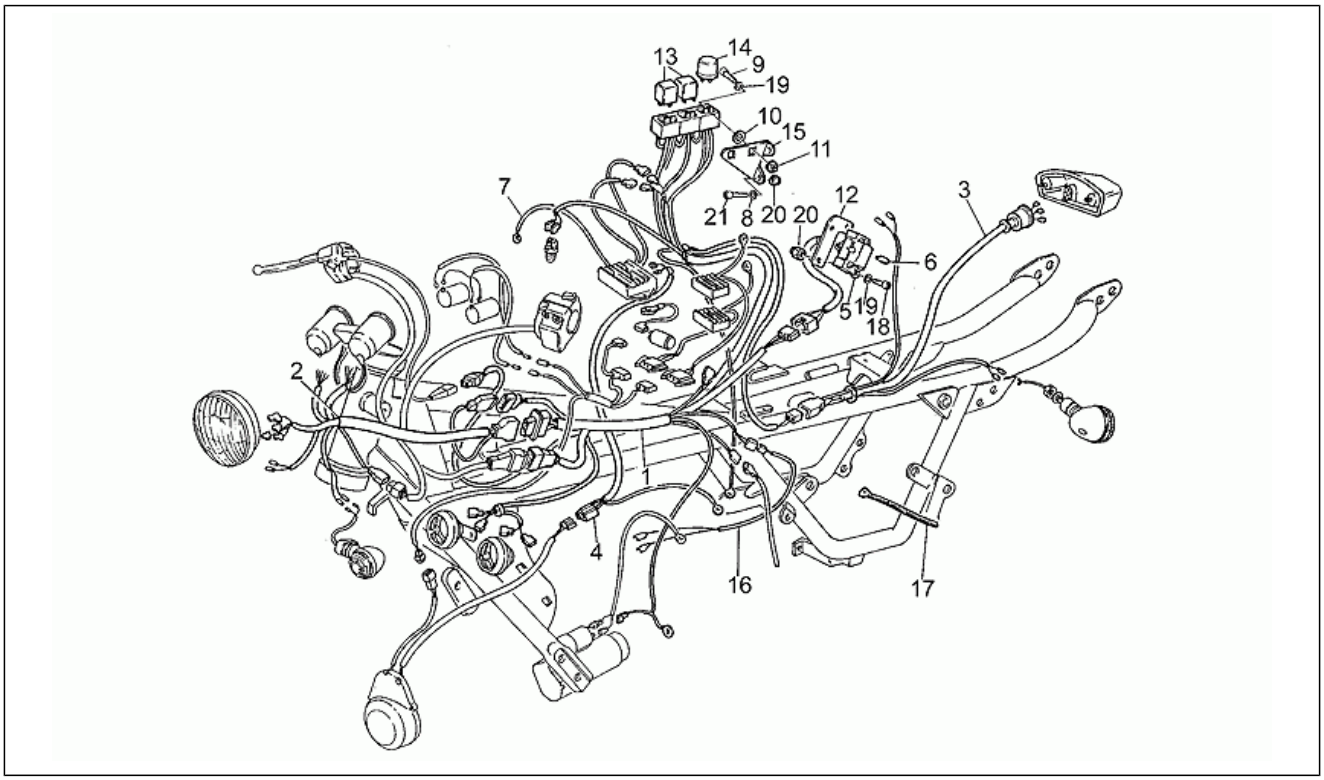

Pos.	Code	Description	Quant	Variants
1	GU31747166	Circuit electrique	1	**Spécifications techniques:**From frame LG12200[T2]
2	GU31747266	Câblage tableau de bord	1	**Spécifications techniques:**From frame LG12200[T2]
3	GU31747365	Câblage feu AR	1	**Spécifications techniques:**From frame LG12200[T2]
4	GU29725850	Câblage alternat.-régulateur	1	**Spécifications techniques:**From frame LG12200[T2]
5	GU30743000	Boîte à fusibles	1	**Spécifications techniques:**From frame LG12200[T2]
6	GU28742560	Fusible 15A	6	**Spécifications techniques:**From frame LG12200[T2]
7	GU29748550	Câblage alternat.-régulateur	1	**Spécifications techniques:**From frame LG12200[T2]
8	GU95004205	Rondelle	4	**Spécifications techniques:**From frame LG12200[T2]
9	GU98622214	Vis	2	**Spécifications techniques:**From frame LG12200[T2]
10	GU95100128	Rondelle	2	**Spécifications techniques:**From frame LG12200[T2]
11	GU92660501	Ecrou en cage	4	**Spécifications techniques:**From frame LG12200[T2]
12	GU31746365	Plaque	1	**Spécifications techniques:**From frame LG12200[T2]
13	GU30732510	Relais démarrage	2	**Spécifications techniques:**From frame LG12200[T2]
14	GU17750520	Clignotement	1	**Spécifications techniques:**From frame LG12200[T2]
15	GU31704061	Support relais	1	**Spécifications techniques:**From frame LG12200[T2]
16	GU31724540	Câble capteur point mort	1	**Spécifications techniques:**From frame LG12200[T2]
17	GU14609650	Collier 3,6x20,6	1	**Spécifications techniques:**From frame LG12200[T2]
18	GU98622214	Vis	2	**Spécifications techniques:**From frame LG12200[T2]
19	GU95100059	Rondelle 5,25x14x1,5	4	**Spécifications techniques:**From frame LG12200[T2]
20	GU92630105	Ecrou	4	**Spécifications techniques:**From frame LG12200[T2]
21	GU98622218	Vis	2	**Spécifications techniques:**From frame LG12200[T2]

Groupe	CHASSIS
Code	33.16
Description	Sys.frein avant
Révision	1

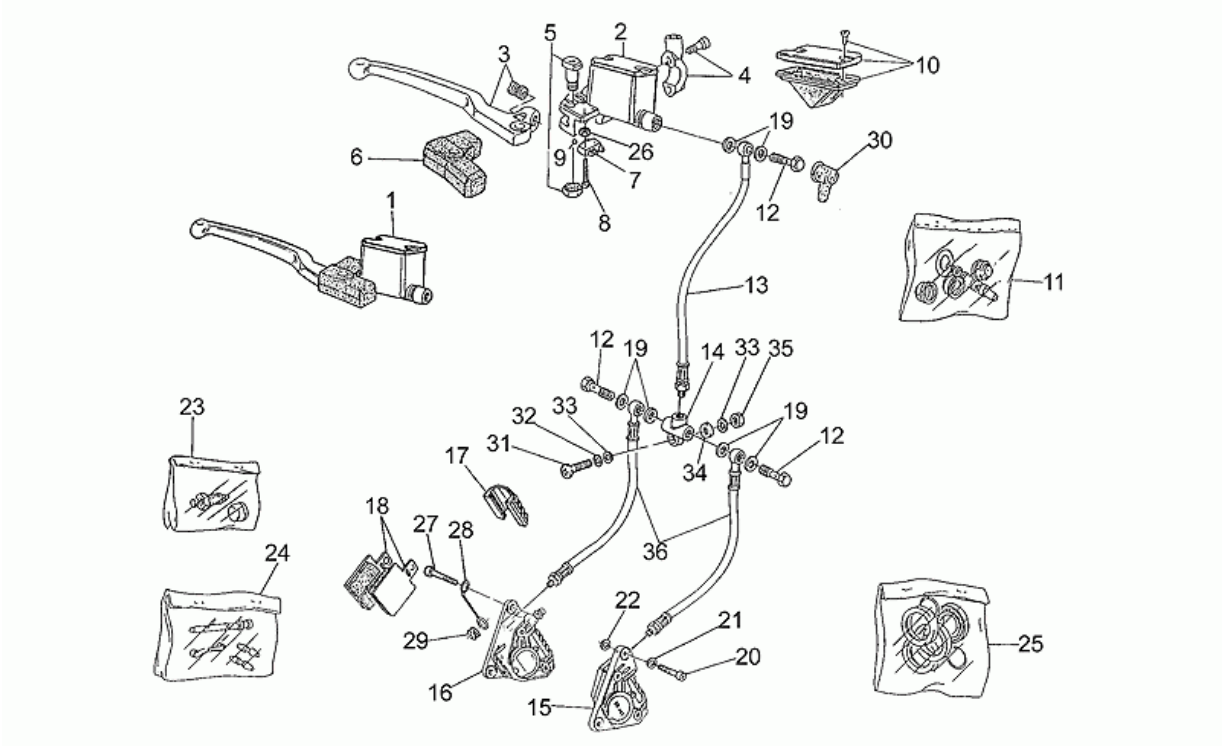

Pos.	Code	Description	Quant	Variants
1	GU30660180	Maît. cyl. frein AV	1	
2	GU28660278	Maît. cyl. frein AV	1	
3	GU30605680	Levier frein	1	
4	GU27664075	Cavalier	1	
5	GU27604815	Pivot	1	
6	GU27663615	Capuchon	1	
7	GU30749860	Minirupteur	1	
8	GU98200214	Vis	2	
9	GU92295708	Bille	1	
10	GU27661115	Couvercle pompe	1	
11	GU28659378	Kit révision pompe	1	
12	GU95990028	Vis tuyau huile *	3	
13	GU31657165	Tube frein AV	1	
14	GU31656860	Répartiteur	1	
15	GU19652336	Pince frein AV G	1	**Spécifications techniques:**Brembo[BR]
15	GU31652265	Pince frein AV D Grimeca	1	**Spécifications techniques:**See technical comm.n.298 of 1995[29895C], Grimeca[GR]
16	GU19652300	Pince frein AV D	1	**Spécifications techniques:**Brembo[BR]
16	GU31652365	Pince frein AV G Grimeca	1	**Spécifications techniques:**See technical comm.n.298 of 1995[29895C], Grimeca[GR]
17	GU31654765	Couvercle pince frein GRIMECA	2	**Spécifications techniques:**See technical comm.n.298 of 1995[29895C], Grimeca[GR]
17	GU39654700	Couvercle pince frein BREMBO	2	**Spécifications techniques:**Brembo[BR]
18	GU27654610	Plaquettes-paire BREMBO	2	**Spécifications techniques:**Brembo[BR]
18	GU31654665	Plaquettes-paire GRIMECA	2	**Spécifications techniques:**See technical comm.n.298 of 1995[29895C], Grimeca[GR]
19	GU25656100	Garniture	6	
20	GU98622422	Vis	3	
21	GU61270300	Rondelle élastique 8x15x0,3	4	

Groupe	CHASSIS
Code	33.16
Description	Sys.frein avant
Révision	1

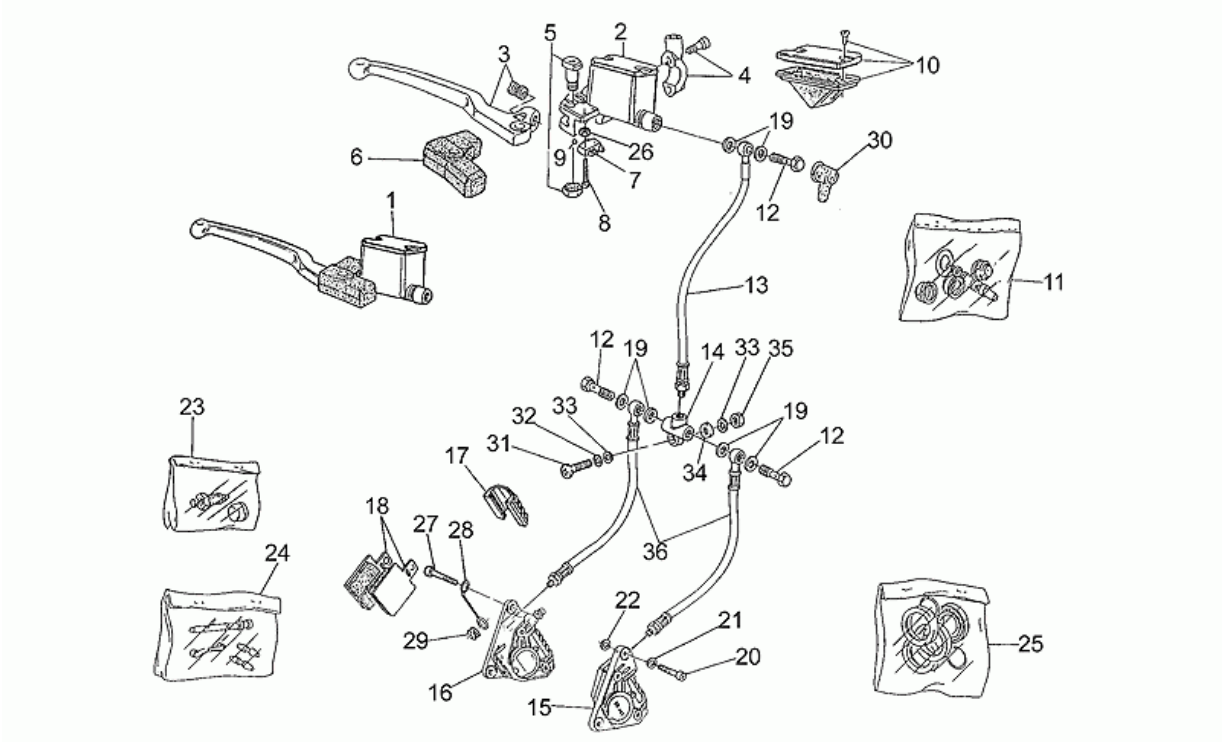

Pos.	Code	Description	Quant	Variants
22	GU95100250	Rondelle 8,5X18X0,5	1	
22	GU95100251	Rondelle 8,5X18X0,8	1	
23	GU31659265	Purge+capuchon GRIMECA	2	**Spécifications techniques:**See technical comm.n.298 of 1995[29895C], Grimeca[GR]
23	GU65659200	Purge+capuchon BREMBO D.6	2	**Spécifications techniques:**Brembo[BR]
24	GU31659165	Axes+ressort GRIMECA	2	**Spécifications techniques:**See technical comm.n.298 of 1995[29895C], Grimeca[GR]
24	GU39659100	Axes+ressort BREMBO	2	**Spécifications techniques:**Brembo[BR]
25	GU39659000	Kit révision pince BREMBO	2	**Spécifications techniques:**Brembo[BR]
25	GU66659031	Kit révision pince GRIMECA	2	**Spécifications techniques:**See technical comm.n.298 of 1995[29895C], Grimeca[GR]
26	GU92601002	Ecrou	2	
27	GU98622425	Vis	1	
28	GU23655770	Guide-câble	1	
29	GU91551120	Bague	1	
30	GU39663801	Capuchon	1	
31	GU98230630	Vis	1	
32	GU95004206	Rondelle 6,15x11x0,8	1	
33	GU95000206	Rondelle	1	
34	GU91180605	Entretoise	1	
35	GU92630106	Ecrou M6x1	1	
36	GU31658865	Tube frein AV	2	

Groupe	CHASSIS
Code	33.17
Description	Sys.frein arrière
Révision	1

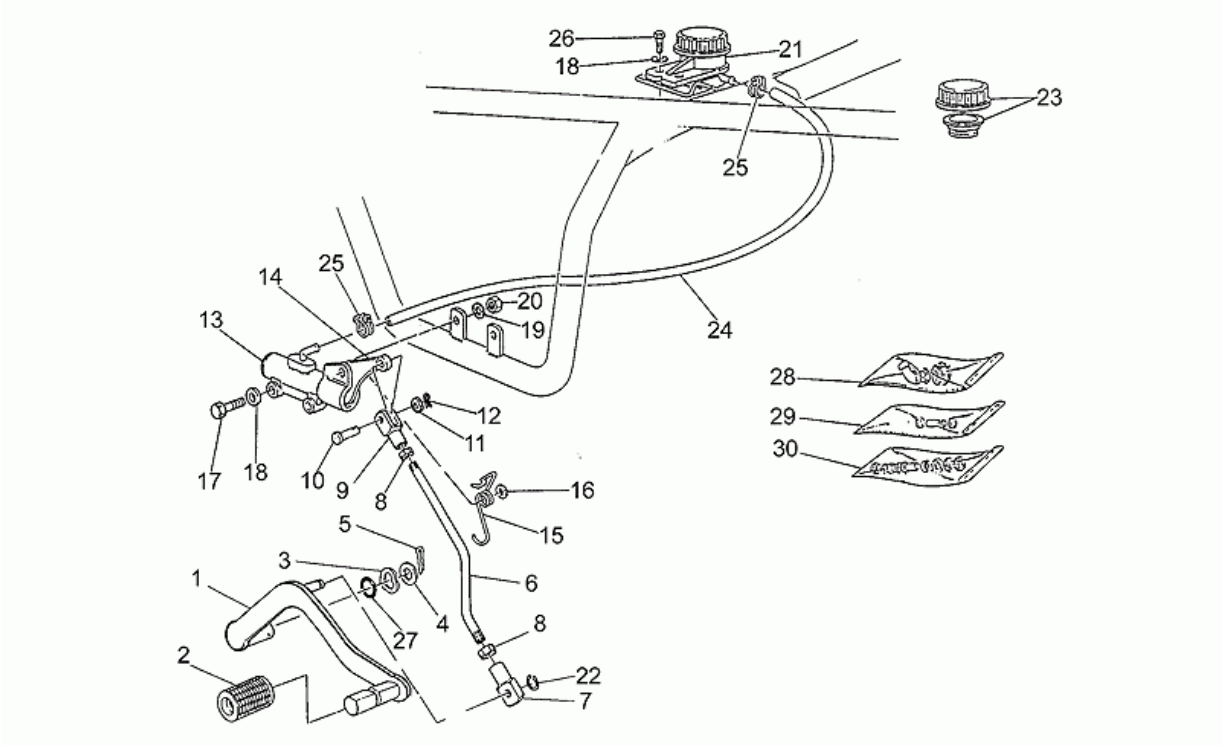

Pos.	Code	Description	Quant	Variants
1	GU31677060	Levier de frein AR	1	
2	GU14251001	Caoutchouc	1	
3	GU95129260	Rondelle élastique	1	
4	GU95004215	Rondelle plate	1	
5	GU95500227	Goupille	1	
6	GU31675280	Tirant	1	
7	GU18257551	Bloc	1	
8	GU92690073	Ecrou	2	
9	GU31626860	Fourchette	1	
10	GU95770265	Goupille	1	
11	GU95129110	Rondelle	1	
12	GU95500222	Goupille	1	
13	GU31666990	Maît.cyl. frein AR	1	**Spécifications techniques:**Brake pump 16mm[MM1]
14	GU19667500	Levier de frein AR	1	**Spécifications techniques:**Brake pump 12,7mm[MM2]
15	GU19667600	Ressort man.ferin ar.	1	**Spécifications techniques:**Brake pump 12,7mm[MM2]
16	GU95004206	Rondelle 6,15x11x0,8	1	**Spécifications techniques:**Brake pump 12,7mm[MM2]
17	GU98052325	Vis	2	
18	GU95000206	Rondelle	4	
19	GU61013800	Rondelle spéciale	2	
20	GU92630106	Ecrou M6x1	2	
21	GU65663500	Réserv. huile freins	1	
22	GU90271008	Bague seeger	1	
23	GU17661052	Bouchon réservoir	1	
24	GU00823950050	Tuyau huile	1	
25	GU19157800	Collier	2	
26	GU98054316	Vis	2	
27	GU90706141	Joint torique	1	
28	GU19659500	Gr.révision raccordde pomp	1	

Groupe	CHASSIS
Code	33.17
Description	Sys.frein arrière
Révision	1

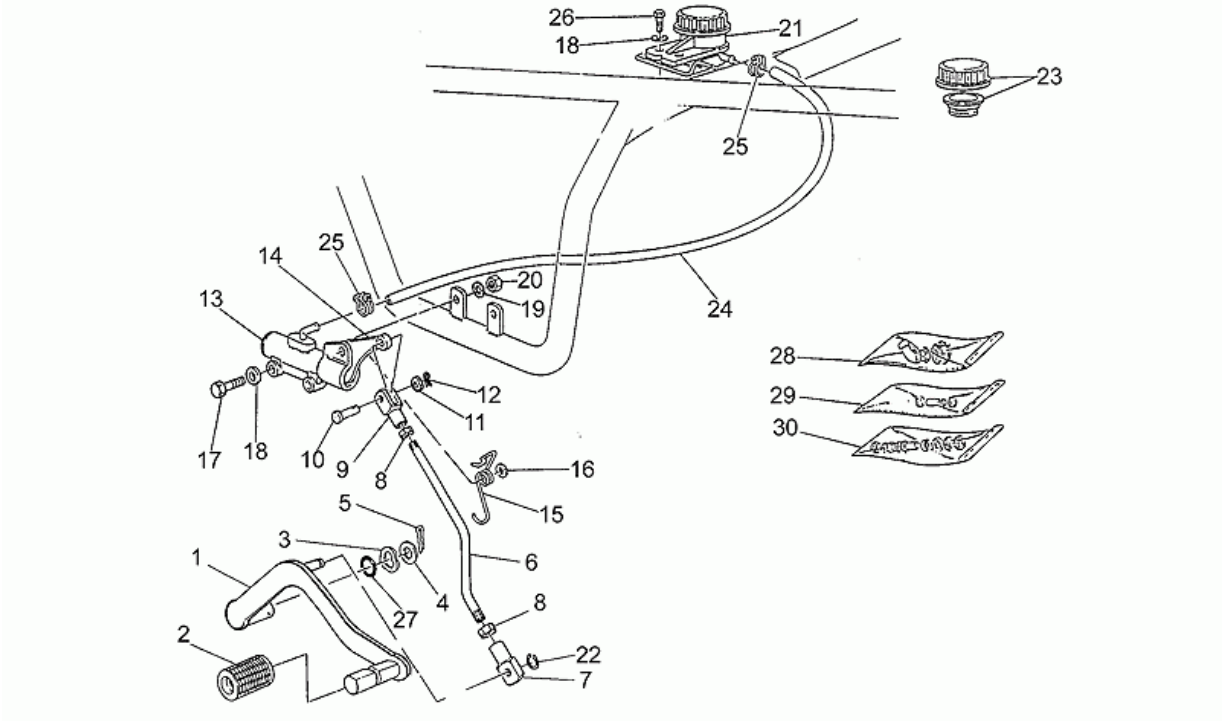

Pos.	Code	Description	Quant	Variants
29	GU19659600	Kit révision levier	1	**Spécifications techniques:**Brake pump 12,7mm[MM2]
30	GU17659352	Kit rév. pompe AR	1	**Spécifications techniques:**Brake pump 12,7mm[MM2]

Groupe	CHASSIS
Code	33.18
Description	Guidon - Commandes
Révision	1

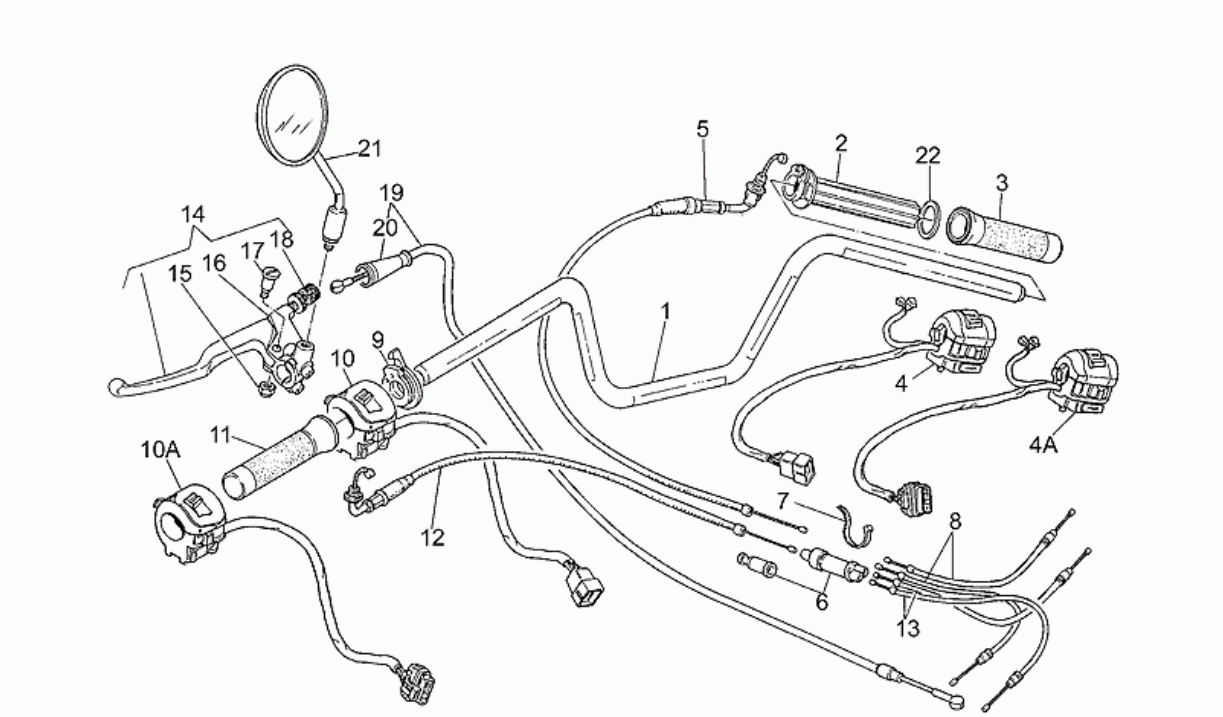

Pos.	Code	Description	Quant	Variants
1	GU31600365	Guidon	1	
2	GU30603800	Tuyau gaz sans manette	1	
3	GU31603565	Poignée dr.	1	
4	GU30738800	Déviateur feux dte	1	**Spécifications techniques:**Up to frame LG12199[T1]
4	GU30738860	Déviateur feux dte	1	**Spécifications techniques:**From frame LG12200[T2]
5	GU31117565	Câble gaz	1	
6	GU30607910	Dedoublereur	2	
7	GU14609650	Collier 3,6x20,6	2	
8	GU27117775	Câble gaz	2	
9	GU30135200	Commande starter	1	
10	GU30738000	Déviateur feux gche	1	**Spécifications techniques:**Up to frame LG12199[T1]
10	GU30738060	Déviateur feux gche	1	**Spécifications techniques:**From frame LG12200[T2]
11	GU31603065	Poignée gc.	1	
12	GU31132865	Câble starter	1	
13	GU27133515	Câble starter	2	
14	GU30605560	Levier embrayage complet	1	
15	GU92602206	Ecrou	1	
16	GU30601800	Supp.du levier nude l'embray.	1	
17	GU30530528	Goujon de levier	1	
18	GU30602500	Réglage	1	
19	GU31093065	Câble embrayage	1	
20	GU23093870	Soufflet	1	
21	GU31769465	Miroir rétroviseur	2	
22	GU30606900	Rondelle nylon	1	

Groupe	CHASSIS
Code	33.19
Description	Pare-brise
Révision	1

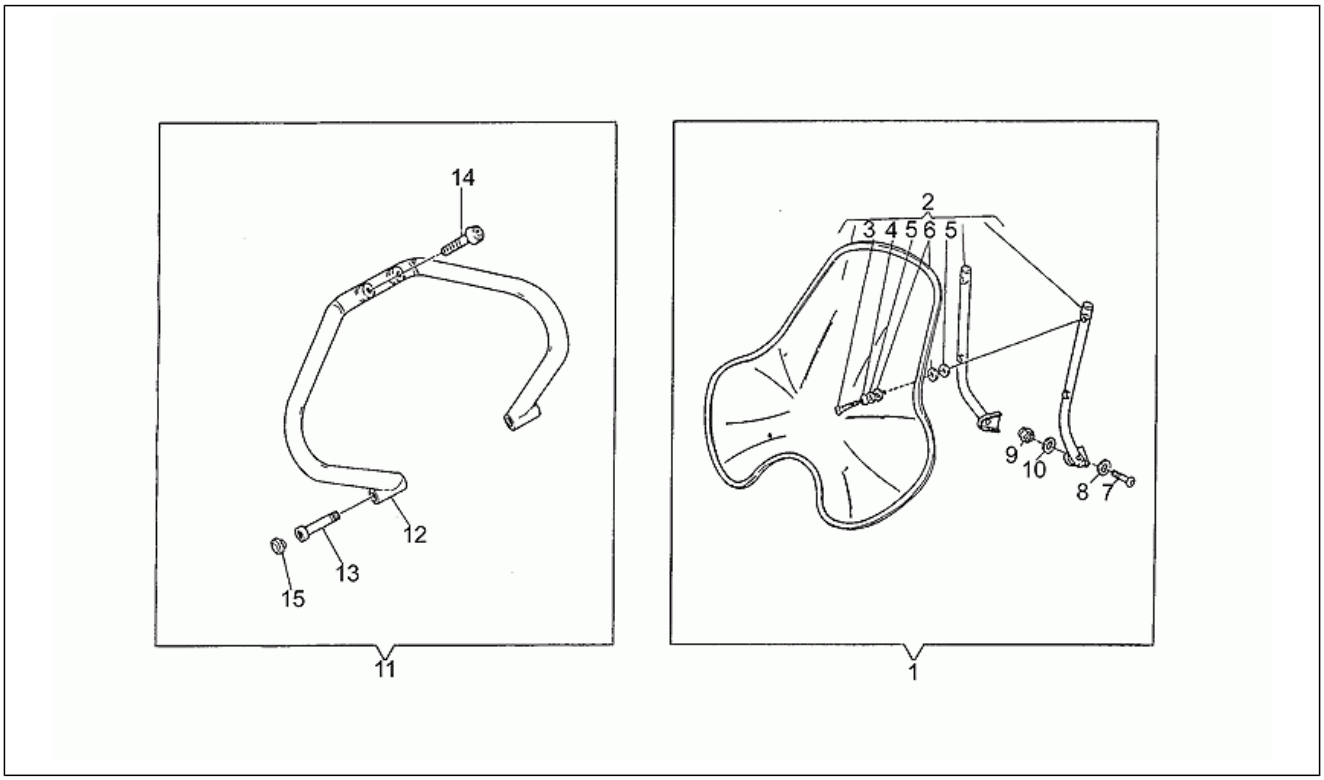

Pos.	Code	Description	Quant	Variants
1	GU31575161	Pare-brise cpl.	1	
2	GU31577261	Pare-brise cpl.	1	
3	GU98270621	Vis	4	
4	GU18577850	Rondelle	4	
5	GU95100144	Rondelle plate	8	
6	GU93110060	Caoutchouc	8	
7	GU98231045	Vis	2	
8	GU19149800	Rondelle 10,5x16x1	2	
9	GU92630110	Ecrou M10X1,5	2	
10	GU95000210	Rondelle	2	
11	GU31459866	Pare-chocs AV	1	
12	GU31450266	Front protection	1	
13	GU98620540	Vis	2	
14	GU98622420	Vis	2	
15	GU93180216	Caoutchouc	2	

Groupe	CHASSIS
Code	33.20
Description	Garde-boue AV-AR
Révision	1

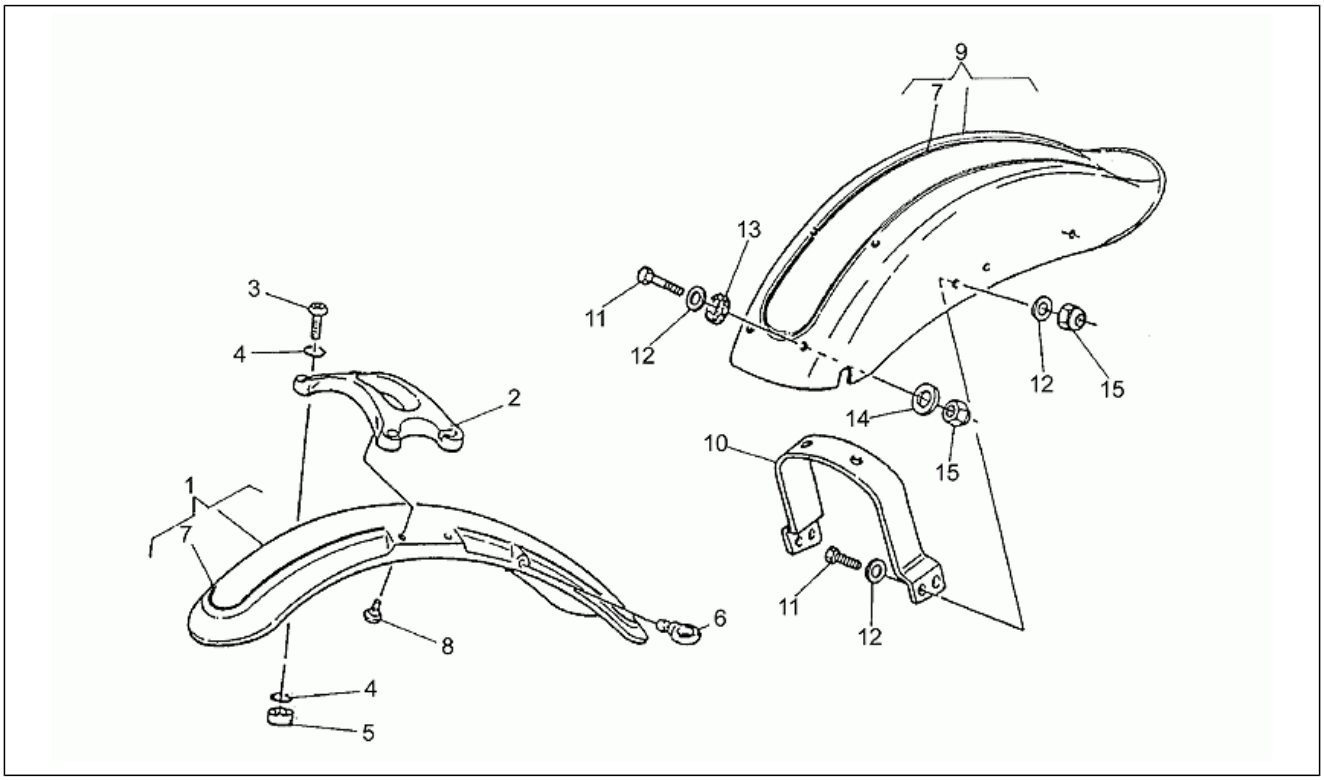

Pos.	Code	Description	Quant	Variants
1	GU314344651	Garde-boue av.blanc	1	**Couleur véhicule:**Brut[gr]
1	GU31434466	Garde-boue Av.	1	**Couleur véhicule:**Shiny black 532[l.b]
1	GU31434467	Garde-boue Av.	1	**Couleur véhicule:**Nacht blau blue 228[b.], Gold 044[g.]
1	GU31434470	Garde-boue Av.	1	**Couleur véhicule:**Vert[gn]
1	GU31434471	Garde-boue Av.	1	**Couleur véhicule:**Nacht blau blue 228[b.]
1	GU31434472	Garde-boue Av.	1	**Couleur véhicule:**Amaranth red 142[a.r]
1	GU31434485	Garde-boue Av.	1	**Couleur véhicule:**Cherry red 141[c.r]
1	GU31434486	Garde-boue Av.	1	**Couleur véhicule:**Shiny black 532[l.b], Yellow 045[y.]
1	GU31434489	Garde-boue Av.	1	**Année:**1995[S] **Couleur véhicule:**Cherry red 141[c.r], Shiny black 532[l.b] **Spécifications techniques:**See technical comm.n.301 of 1995[30195C]
2	GU31436665	Plaque de stabilisation	1	
3	GU98230826	Vis	4	
4	GU90706092	Joint torique	8	
5	GU91180829	Entretoise	4	
6	GU28659740	Oeillet	2	
7	GU30925510	Décalco ligne rouge	4	
7	GU30925512	Décalco ligne bleue	4	
7	GU71920518	Décalco ligne bleue	4	
8	GU31439565	Vis	4	
9	GU31437067	Garde-boue Ar.	1	**Couleur véhicule:**Nacht blau blue 228[b.], Gold 044[g.]
9	GU31437070	Garde-boue Ar.	1	**Année:**1996[T] **Couleur véhicule:**Vert[gn]
9	GU31437071	Garde-boue Ar.	1	**Année:**1996[T] **Couleur véhicule:**Nacht blau blue 228[b.]
9	GU31437072	Garde-boue Ar.	1	**Année:**1996[T] **Couleur véhicule:**Amaranth red 142[a.r]
9	GU314370801	Garde-boue Ar.	1	**Couleur véhicule:**Brut[gr]

Groupe	CHASSIS
Code	33.20
Description	Garde-boue AV-AR
Révision	1

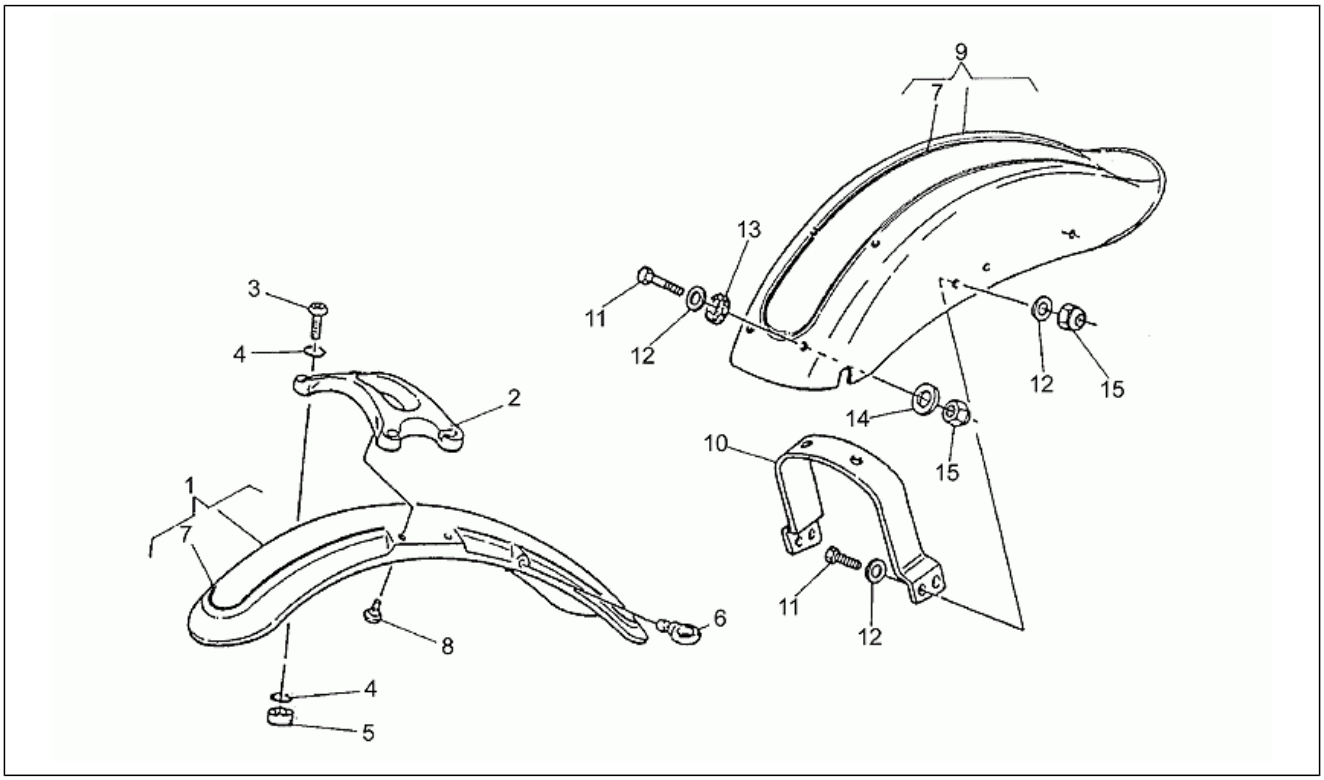

Pos.	Code	Description	Quant	Variants
9	GU31437081	Garde-boue Ar.	1	**Couleur véhicule:**Shiny black 532[l.b]
9	GU31437085	Garde-boue Ar.	1	**Couleur véhicule:**Cherry red 141[c.r]
9	GU31437086	Garde-boue Ar.	1	**Couleur véhicule:**Shiny black 532[l.b], Yellow 045[y.]
9	GU31437089	Garde-boue Ar.	1	**Année:**1995[S] **Couleur véhicule:**Cherry red 141[c.r], Shiny black 532[l.b] **Spécifications techniques:**See technical comm.n.301 of 1995[30195C]
10	GU31439160	Support g-boue AR	1	
11	GU98054320	Vis	6	
12	GU95000206	Rondelle	10	
13	GU93110060	Caoutchouc	2	
14	GU95100141	Rondelle 6,4x12x1,2	2	
15	GU92630206	Ecrou M6x1	6	

Groupe	CHASSIS
Code	33.21
Description	Repose-Pieds
Révision	1

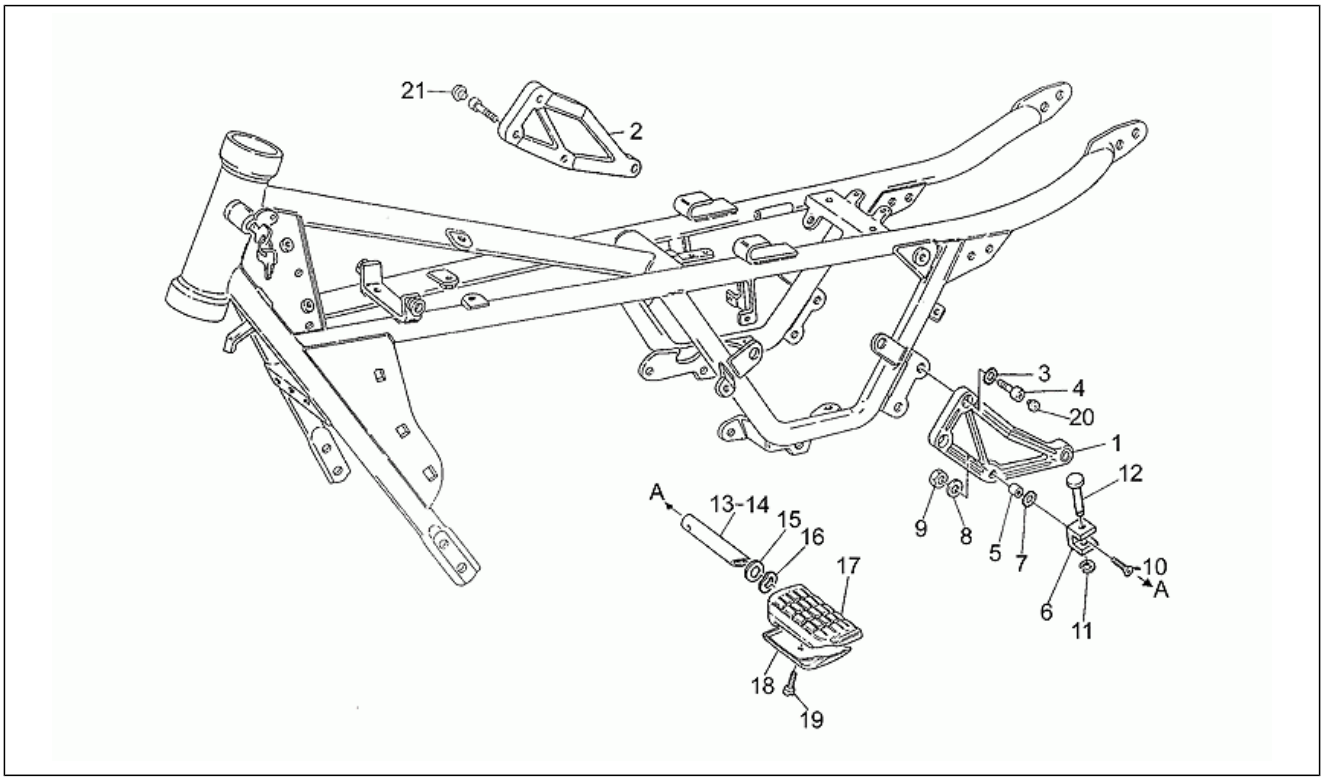

Pos.	Code	Description	Quant	Variants
1	GU23446010	Support r-p. G pass.	1	
2	GU23443510	Support r-p. pass.dr.	1	
3	GU61270300	Rondelle élastique 8x15x0,3	4	
4	GU98622420	Vis	4	
5	GU29436450	Douille	2	
6	GU66441730	Plaque fdc r-pied	2	
7	GU95021108	Rondelle élastique	2	
8	GU61270300	Rondelle élastique 8x15x0,3	2	
9	GU92630508	Ecrou	2	
10	GU98250830	Vis	2	
11	GU90280006	Bague de butée	2	
12	GU66440630	Pivot	2	
13	GU66440730	Tuyau rep.-pieds av.d.	1	
14	GU66441830	Tuyau rep.-pieds av.g.	1	
15	GU66441630	Cale	2	
16	GU51609800	Rondelle élastique	2	
17	GU66443230	Repose pieds	2	
18	GU31441260	Plaquette	2	
19	GU98304014	Vis	2	
20	GU93180206	Caoutchouc	1	
21	GU23943410	Bouchon	5	

Groupe	CHASSIS
Code	33.22
Description	Pince frein arrière
Révision	1

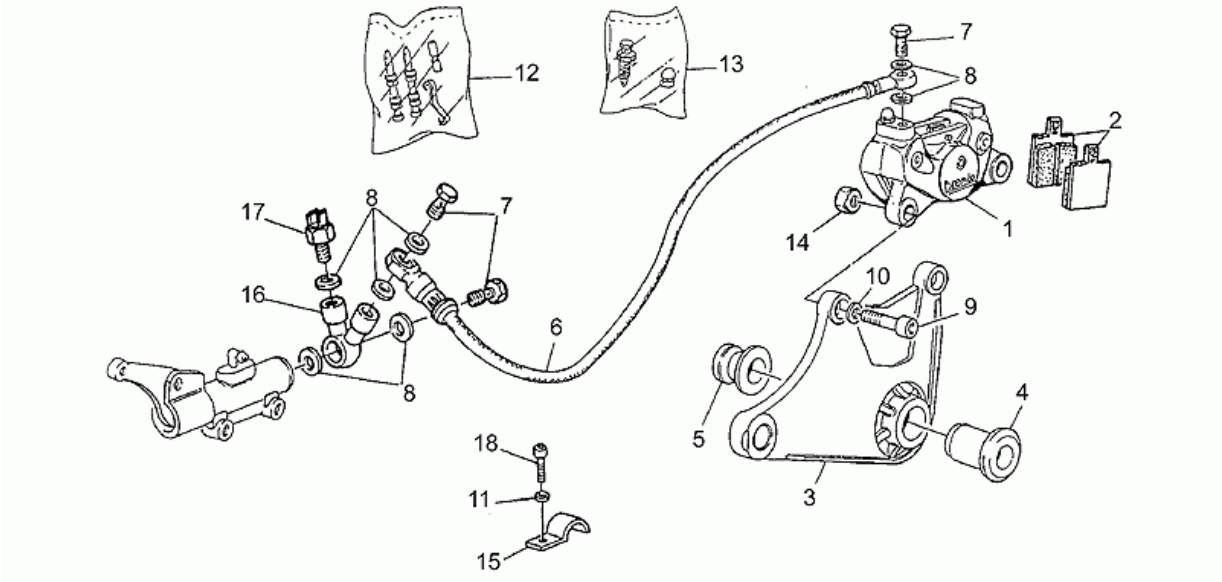

Pos.	Code	Description	Quant	Variants
1	GU23653011	Pince frein arrière	1	**Spécifications techniques:**Second series[2A], Brake disc 5,6mm[DM1]
1	GU31653060	Pince frein arrière	1	**Spécifications techniques:**First series[1A], Brake disc 7,85mm[DM2]
2	GU27654610	Plaquettes-paire BREMBO	1	**Spécifications techniques:**Second series[2A], Brake disc 5,6mm[DM1]
2	GU31654660	Plaquettes-paire	1	**Spécifications techniques:**First series[1A], Brake disc 7,85mm[DM2]
3	GU27635811	Plaq. fix pince frein	1	
4	GU31634230	Bague	1	
5	GU31634130	Entretoise	1	
6	GU28657500	Tube frein	1	
7	GU95990028	Vis tuyau huile *	3	
8	GU25656100	Garniture	7	
9	GU98612425	Vis	2	
10	GU61270300	Rondelle élastique 8x15x0,3	2	
11	GU95000206	Rondelle	1	
12	GU23659111	Pivots+ressorts pince BREMBO	1	**Spécifications techniques:**Second series[2A], Brake disc 5,6mm[DM1]
12	GU31659160	Axes+ressort BREMBO	1	**Spécifications techniques:**First series[1A], Brake disc 7,85mm[DM2]
13	GU31659260	Purge+capuchon BREMBO D.10	1	
14	GU92602208	Ecrou	1	
15	GU93301313	Cavalier	1	
16	GU19668000	Raccord	1	
17	GU63657000	Interrupteur	1	
18	GU98622310	Vis	1	

Groupe	CHASSIS
Code	33.23
Description	Porte-bagages
Révision	1

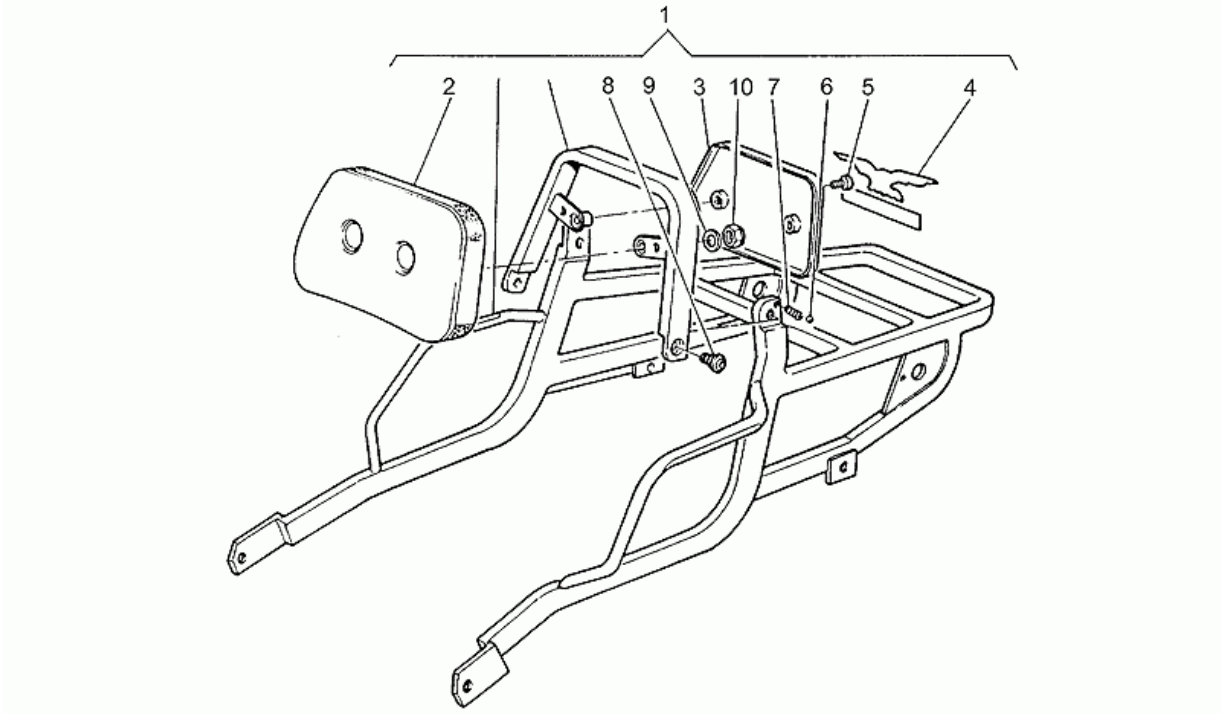

Pos.	Code	Description	Quant	Variants
1	GU31466566	Porte-bagages basc. cpl.	1	
2	GU31468065	Coussin dossier	1	
3	GU31468265	Coussin dossier	1	
4	GU30942300	Décalco "Moto Guzzi"	1	**Spécifications techniques:**Gold/black decal[D2], Nou used on year 1996[NS]
4	GU30942301	Décalco "Moto Guzzi"	1	**Spécifications techniques:**Gold/red decal[D1], Nou used on year 1996[NS]
5	GU98230612	Vis	2	
6	GU92295704	Bille	1	
7	GU94321007	Ressort	1	
8	GU31468165	Vis	2	
9	GU95004206	Rondelle 6,15x11x0,8	2	
10	GU92601206	Ecrou	2	

Groupe	CHASSIS
Code	33.24
Description	Roue Av.
Révision	1

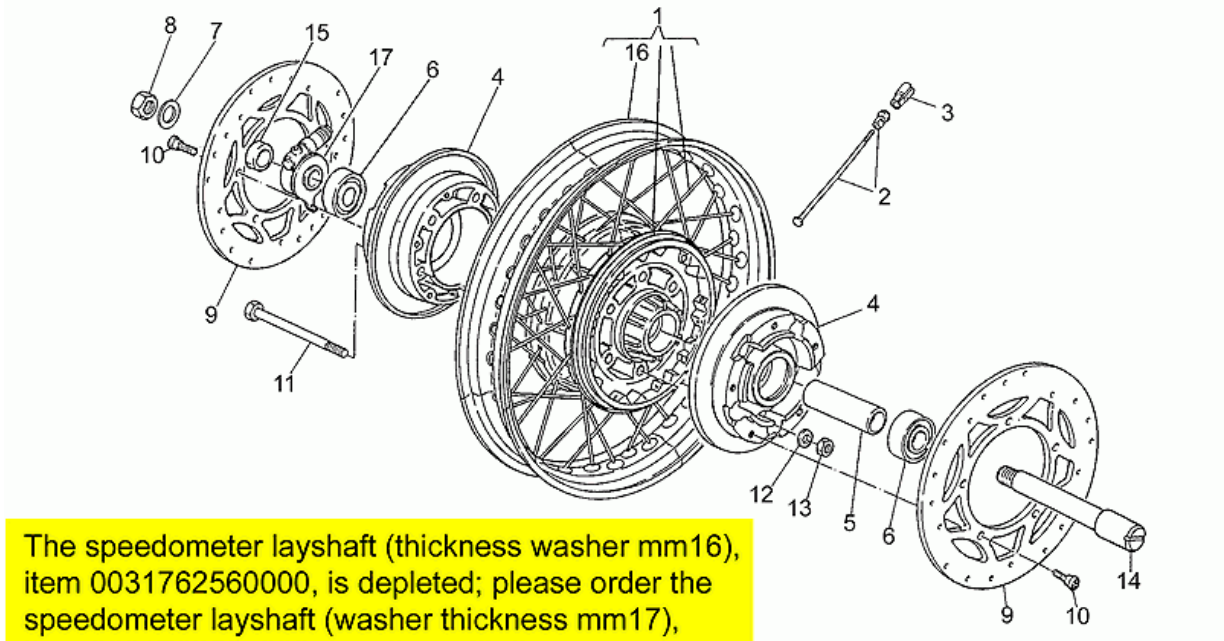

The speedometer layshaft (thickness washer mm16), item 0031762560000, is depleted; please order the speedometer layshaft (washer thickness mm17), item 0031762561000, together with the spacer (thickness mm 8,25) item 0031616361000

Pos.	Code	Description	Quant	Variants
1	GU31610365	Roue AV nue 2,15x18"	1	
2	GU39611601	Rayon	36	
3	GU12616101	Contrepoids 15 gr.	1	
3	GU12616102	Contrepoids 20 gr.	1	
3	GU12616103	Contrepoids 30 gr.	1	
4	GU31620365	Bride	2	
5	GU31615260	Entretoise roulements	1	
6	GU92204221	Roulement	2	
7	GU95004217	Rondelle 17X27X2	1	
8	GU92602516	Ecrou M16X1,5	1	
9	GU31613365	Disque frein avant	2	
10	GU30611460	Vis	10	
11	GU98052470	Vis	5	
12	GU14615901	Rondelle 8,4X13X0,8	5	
13	GU92630508	Ecrou	5	
14	GU31614160	Axe de roue AV	1	
15	GU31616360	Entretoise	2	**Spécifications techniques:**First series[1A]
15	GU31616361	Entretoise	2	**Spécifications techniques:**Second series[2A]
15	GU31627162	Bague d'étanchéité	1	**Spécifications techniques:**See spare parts comm.n.036 of 2000[03600N], Third series[3A]
16	GU23610870	Jante avant 2,15x18"	1	
17	GU31762561	Renvoi compteur km	1	**Spécifications techniques:**Second series[2A]
17	GU31762562	Renvoi tachymètre	1	**Spécifications techniques:**See spare parts comm.n.036 of 2000[03600N], Third series[3A]

Groupe	CHASSIS
Code	33.25
Description	Roue arrière
Révision	1

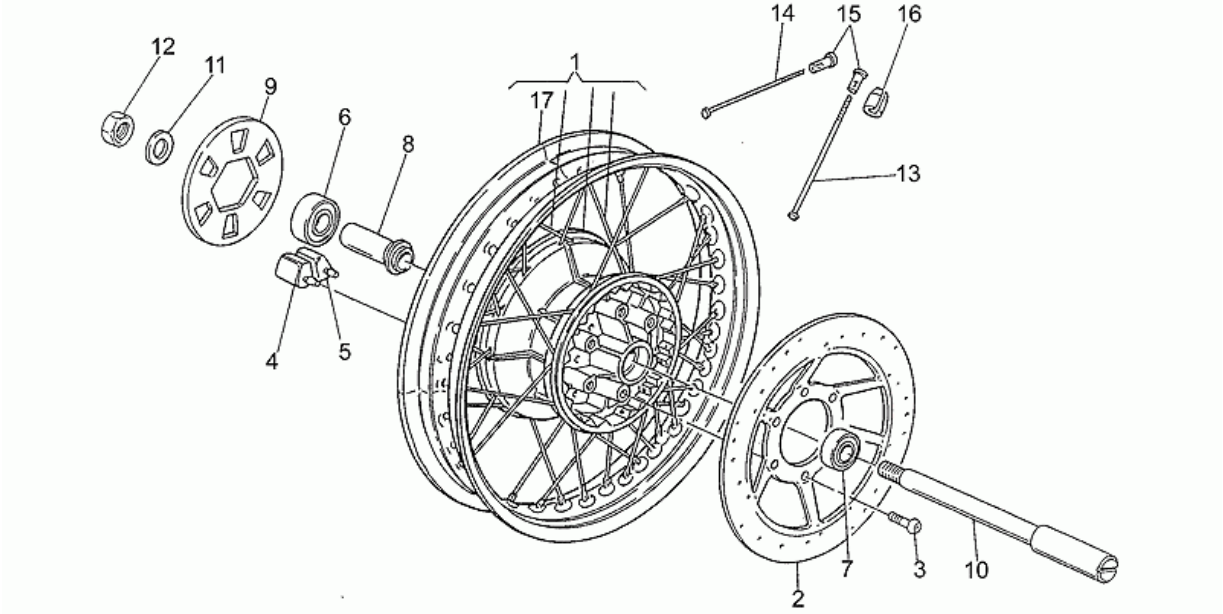

Pos.	Code	Description	Quant	Variants
1	GU31630365	Roue AR cpl	1	
2	GU27613311	Disque frein arrière	1	**Spécifications techniques:**First series[1A], Brake disc 5mm[DM3]
2	GU31613380	Disque frein	1	**Spécifications techniques:**Second series[2A], Brake disc 5,6mm[DM1]
3	GU98622425	Vis	6	
4	GU19632501	Joint en caoutchouc d.	6	
5	GU19632502	Joint en caoutchouc g.	6	
6	GU92204218	Roulement	1	
7	GU92204217	Roulement	1	
8	GU27633910	Entretoise	1	
9	GU27356910	Entretoise	1	
10	GU31633330	Axe de roue AR	1	
11	GU14634400	Rondelle	1	
12	GU92602316	Ecrou M6x1,5	1	
13	GU23631470	Rayon long	18	
14	GU23631170	Rayon court	18	
15	GU27631250	Nipples	36	
16	GU12616101	Contrepoids 15 gr.	1	
16	GU12616102	Contrepoids 20 gr.	1	
16	GU12616103	Contrepoids 30 gr.	1	
17	GU23630770	Jante arrière 250x16"	1	

Groupe	CHASSIS
Code	33.26
Description	Suspension avant
Révision	1

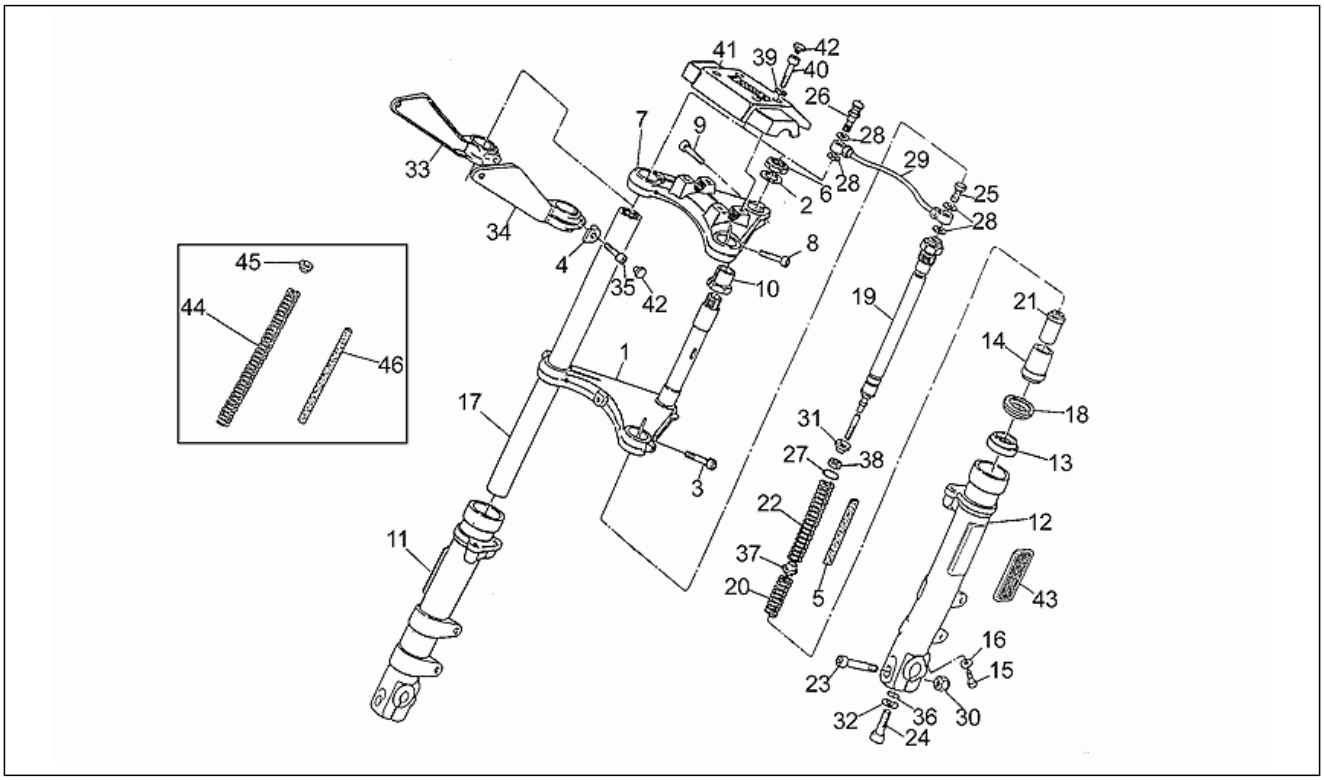

Pos.	Code	Description	Quant	Variants
1	GU31494065	Plaque inf.	1	
2	GU18513560	Rondelle bouchon fourreau	1	
3	GU98612535	Vis	2	
4	GU23497910	Entretoise	2	
5	GU23526370	Tube anti-frottement	2	
6	GU18513460	Bouchon tube	1	
7	GU31493140	Plaque sup. fourche POLIZIA	1	
8	GU98610540	Vis	2	
9	GU98612535	Vis	1	
10	GU18516660	Douille bloc. direction	1	
11	GU31522565	Fourreau D	1	
12	GU31522665	Fourreau G	1	
13	GU90403857	Joint spi	2	
14	GU20527620	Douille	2	
15	GU98622320	Vis	2	
16	GU95100116	Rondelle 6,25x10x1,5	4	
17	GU23525470	Tige	2	
18	GU31524550	Pare-poussière	2	
19	GU23526470	Amortisseur	2	
20	GU23526610	Contre-ressort	2	
21	GU28527540	Tampon fin course	2	
22	GU23526910	Ressort	2	
23	GU98620545	Vis	2	
24	GU98622530	Vis	2	
25	GU28556450	Vis percée	1	
26	GU28556250	Soupape air	1	
27	GU90706282	Bague d'étanchéité	2	
28	GU28556350	Rondelle en cuivre	4	

Groupe	CHASSIS
Code	33.26
Description	Suspension avant
Révision	1

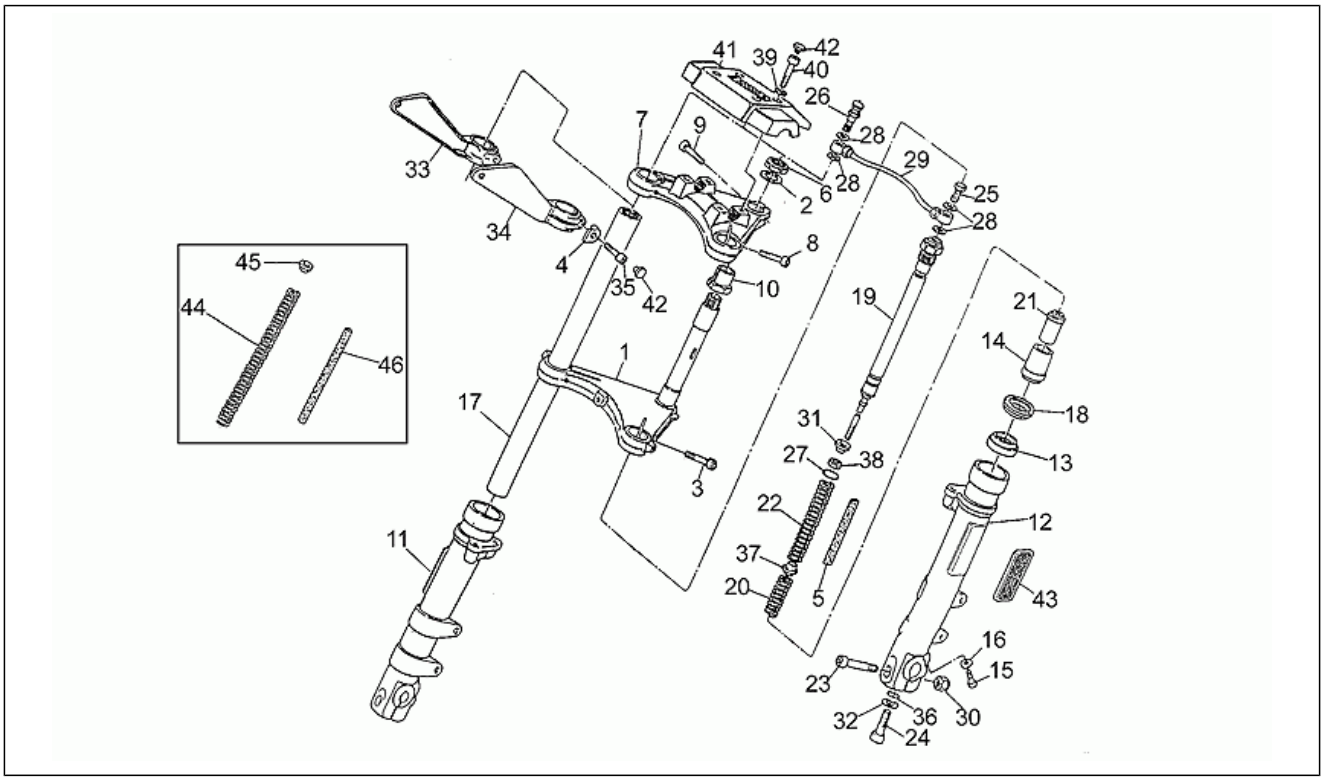

Pos.	Code	Description	Quant	Variants
29	GU19529660	Tuyau amortisseur AV	1	
30	GU92602210	Ecrou	2	
31	GU28526540	Rondelle	2	
32	GU27499120	Rondelle plate	2	
33	GU31496165	Support droite	1	
34	GU31496265	Support gauche	1	
35	GU98622425	Vis	2	
36	GU90706094	Joint torique 9x2	2	
37	GU23527910	Entretoise	2	
38	GU92602308	Ecrou	2	
39	GU14615901	Rondelle 8,4X13X0,8	4	
40	GU98620435	Vis	4	
41	GU23500210	Plaque fixation guidon	1	
42	GU23943410	Bouchon	6	
43	GU31781665	Catadioptre, ambre	2	
44	GU27526620	Ressort	2	**Spécifications techniques:**See technical comm.n.299 of 1995[29995C], Single spring fork[FS]
45	GU23526510	Bague	2	**Spécifications techniques:**See technical comm.n.299 of 1995[29995C], Single spring fork[FS]
46	GU27526320	Tube anti-frottement	2	**Spécifications techniques:**See technical comm.n.299 of 1995[29995C], Single spring fork[FS]

Groupe	CHASSIS
Code	33.27
Description	Suspension avant/arriere
Révision	1

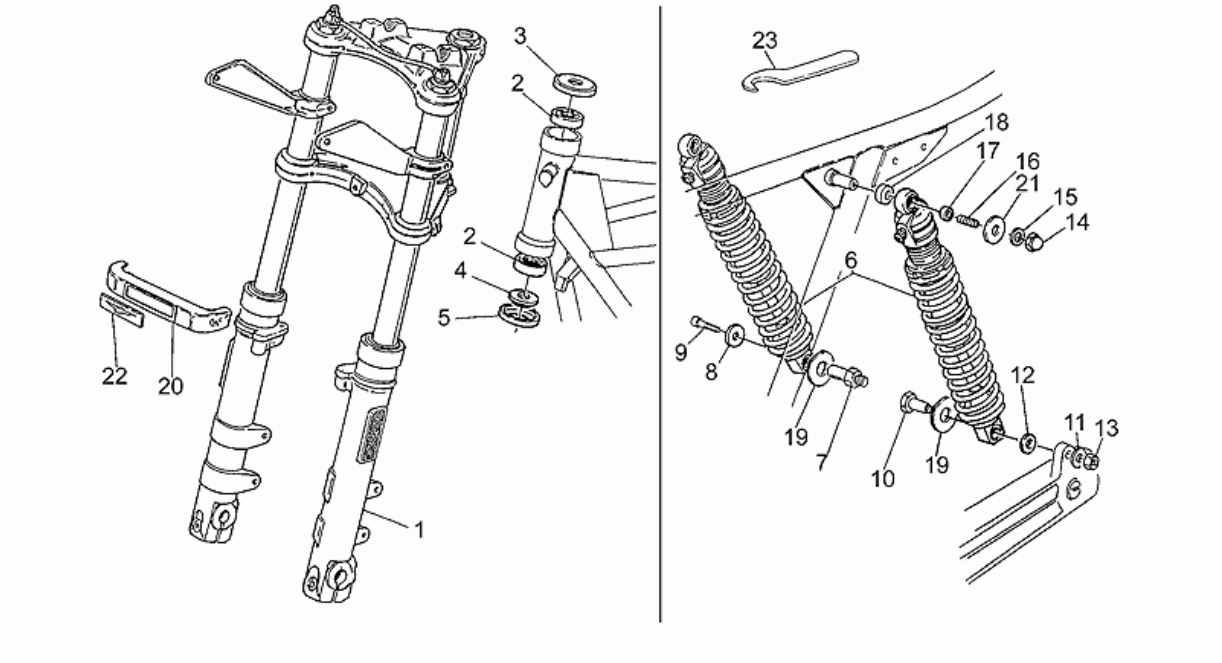

Pos.	Code	Description	Quant	Variants
1	GU31490265	Fourche Av.	1	
2	GU92249225	Roulement roul.con.	2	
3	GU14494600	Rondelle	1	
4	GU14516700	Rondelle d'appui	1	
5	GU14517000	Pare-poussière	1	
6	GU31999262	Amortisseur-paire	1	**Spécifications techniques:**See spare parts comm.n.027 of 1998[02798N]
7	GU23555281	Pivot	1	
8	GU95100235	Entretoise	1	
9	GU98822416	Vis	1	
10	GU23555280	Pivot	1	
11	GU95129180	Rondelle 10,5X18X0,8	1	
12	GU95004210	Rondelle 10,2x18x2	2	
13	GU92602410	Ecrou	1	
14	GU92781085	Ecrou borgne	2	
15	GU95004208	Rondelle	2	
16	GU96508032	Vis sans tête	2	
17	GU91180804	Entretoise 8,5x12x4	2	
18	GU91181407	Entretoise	2	
19	GU23557690	Rondelle	2	
20	GU31751365	Cache support indicateurs	1	
21	GU95100256	Rondelle	2	
22	GU28769533	Plaquette marque adhésive	1	
22	GU30769560	Plaquette autocollante	1	**Année:**1996[T]
23	GU31912760	Clé de réglage amortisseurs	1	

Groupe	CHASSIS
Code	33.28
Description	Chassis
Révision	1

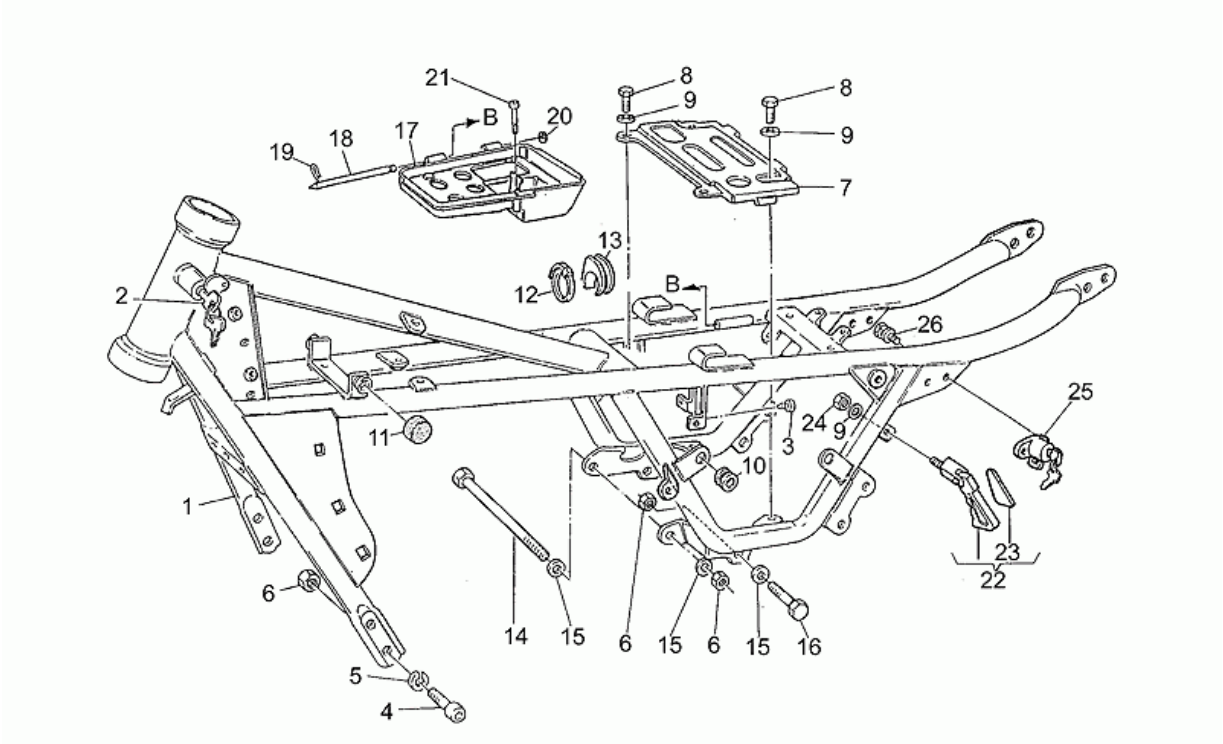

Pos.	Code	Description	Quant	Variants
1	GU31400165	Chassis	1	**Spécifications techniques:**Up to frame LG12199[T1]
1	GU31400167	Chassis	1	**Spécifications techniques:**From frame LG12200[T2]
2	GU19782520	Serrure	1	
3	GU19705900	Tampon	2	
4	GU98622525	Vis 25 mm	4	
5	GU95120105	Rondelle	4	
6	GU92602210	Ecrou	6	
7	GU27418210	Plaque	1	
8	GU98054418	Vis	4	
9	GU95004208	Rondelle	5	
10	GU91551085	Caoutchouc	4	
11	GU39103400	Tampon	2	
12	GU14609650	Collier 3,6x20,6	2	
13	GU14109000	Caoutchouc	2	
14	GU98110199	Pivot M10x205	1	
15	GU95004210	Rondelle 10,2x18x2	7	
16	GU98052555	Vis	2	
17	GU31479630	Cuve	1	
18	GU31479430	Pivot	1	
19	GU95401215	Goupille	1	
20	GU90280005	Rondelle de séreté	1	
21	GU98620240	Vis	1	
22	GU30464310	Poignée	1	
23	GU30920810	Décalcomanie	2	
24	GU92630108	Ecrou	1	
25	GU66466815	Serrure casque	1	
26	GU66468115	Vis à arrachement	2	

Groupe	CHASSIS
Code	33.29
Description	Allumage I
Révision	1

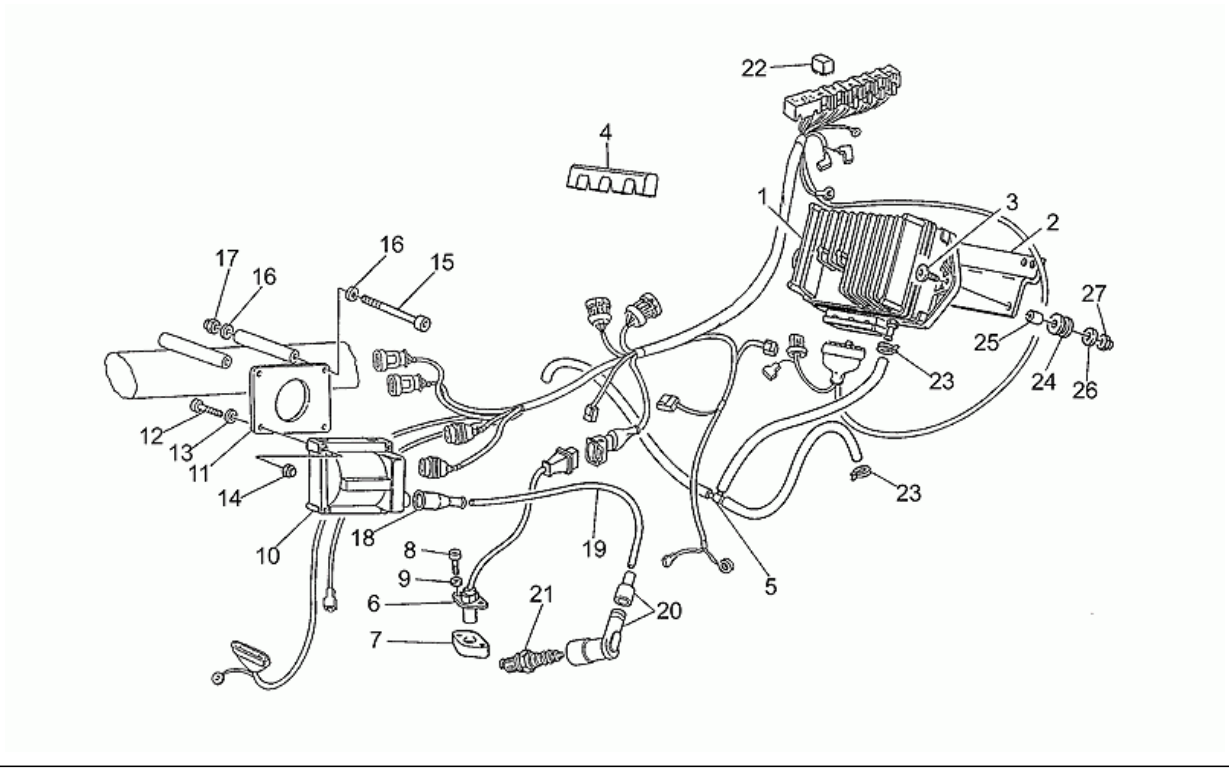

Pos.	Code	Description	Quant	Variants
1	GU29721450	Centrale MED 446A	1	**Spécifications techniques:**From frame LG12200[T2]
2	GU20723820	Support	1	**Spécifications techniques:**From frame LG12200[T2]
3	GU98230622	Vis	2	**Spécifications techniques:**From frame LG12200[T2]
4	GU19025300	Plaquette antivibratile	2	**Spécifications techniques:**From frame LG12200[T2]
5	GU20108120	Conduite doìte auxt.d'aspirat.	1	**Spécifications techniques:**From frame LG12200[T2]
6	GU20721610	Capteur phase/tours	1	**Spécifications techniques:**From frame LG12200[T2]
7	GU31722065	Bride	1	**Spécifications techniques:**From frame LG12200[T2]
8	GU98620222	Vis	2	**Spécifications techniques:**From frame LG12200[T2]
9	GU95004205	Rondelle	2	**Spécifications techniques:**From frame LG12200[T2]
10	GU30716500	Bobine HT	2	**Spécifications techniques:**From frame LG12200[T2]
11	GU20716720	Support bobine	2	**Spécifications techniques:**From frame LG12200[T2]
12	GU98610125	Vis	4	**Spécifications techniques:**From frame LG12200[T2]
13	GU95004204	Rondelle	4	**Spécifications techniques:**From frame LG12200[T2]
14	GU92630104	Ecrou M4x0,7	4	**Spécifications techniques:**From frame LG12200[T2]
15	GU98620360	Vis	2	**Spécifications techniques:**From frame LG12200[T2]
16	GU95004206	Rondelle 6,15x11x0,8	4	**Spécifications techniques:**From frame LG12200[T2]
17	GU92630106	Ecrou M6x1	2	**Spécifications techniques:**From frame LG12200[T2]
18	GU14717600	Capuchon	2	**Spécifications techniques:**From frame LG12200[T2]
19	GU17718350	Câble haute tension	2	**Spécifications techniques:**From frame LG12200[T2]
20	GU30717410	Pipe bougie NGK	2	**Spécifications techniques:**From frame LG12200[T2]
21	0000000	Pneu s. chambre 110/90"	2	**Spécifications techniques:**From frame LG12200[T2]
21	0000000	Pneu s. chambre 110/90"	2	**Spécifications techniques:**From frame LG12200[T2]
21	GU31717061	Bougie NGK BR8ES	2	**Spécifications techniques:**From frame LG12200[T2]
22	GU30732560	Relais Siemens A302/B1008	1	**Spécifications techniques:**From frame LG12200[T2]
23	GU61108500	Collier D9	3	**Spécifications techniques:**From frame LG12200[T2]
24	GU91551080	Caoutchouc	2	**Spécifications techniques:**From frame LG12200[T2]
25	GU91180608	Entretoise	2	**Spécifications techniques:**From frame LG12200[T2]
26	GU95000206	Rondelle	2	**Spécifications techniques:**From frame LG12200[T2]

Groupe	CHASSIS
Code	33.29
Description	Allumage I
Révision	1

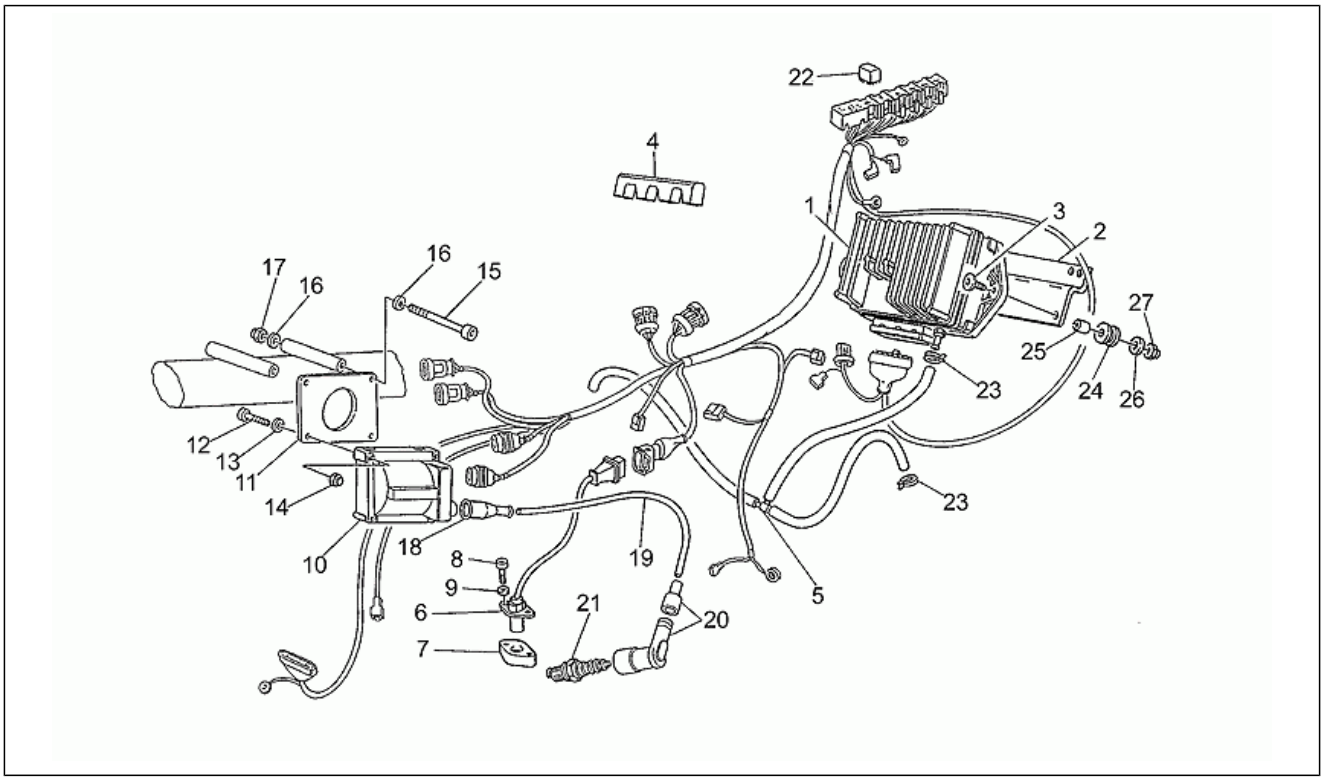

Pos.	Code	Description	Quant	Variants
27	GU92630206	Ecrou M6x1	2	**Spécifications techniques:**From frame LG12200[T2]

Groupe	CHASSIS
Code	33.30
Description	Allumage II
Révision	1

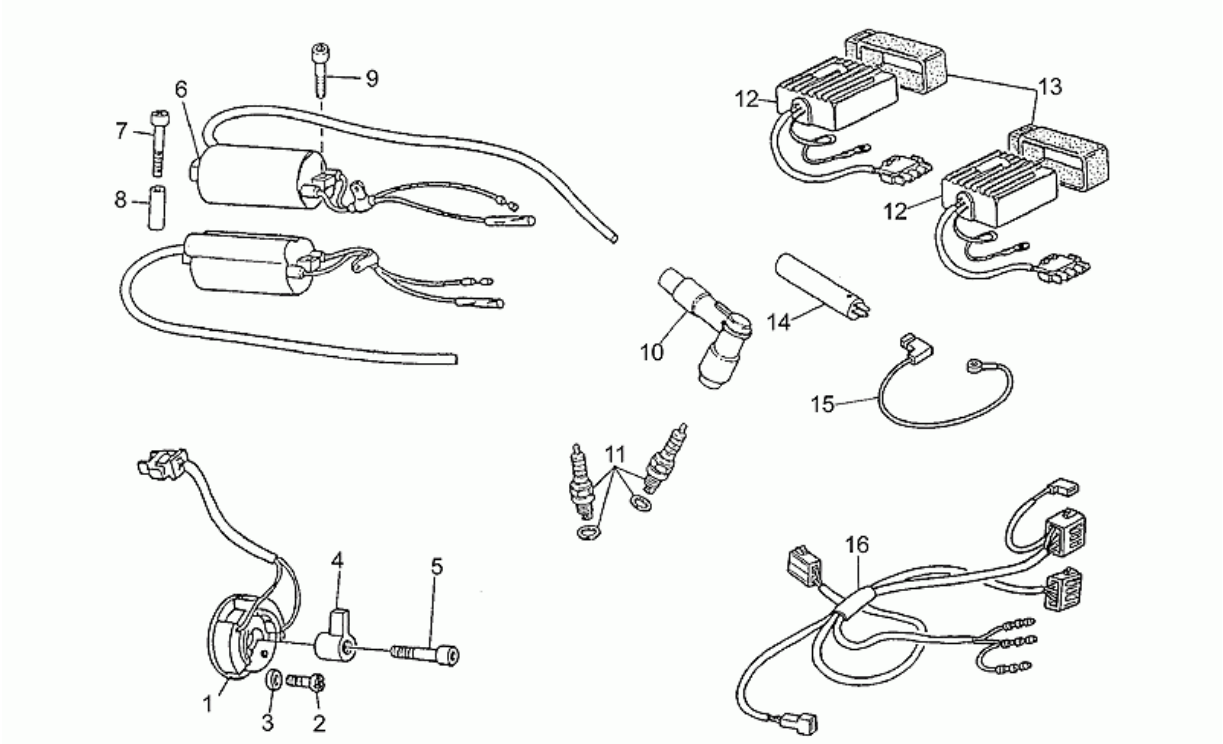

Pos.	Code	Description	Quant	Variants
1	GU29722270	Capteur phase/tours	1	**Spécifications techniques:**Up to frame LG12199[T1]
2	GU98290512	Vis	2	**Spécifications techniques:**Up to frame LG12199[T1]
3	GU95000205	Rondelle	2	**Spécifications techniques:**Up to frame LG12199[T1]
4	GU27721063	Rotor	1	**Spécifications techniques:**Up to frame LG12199[T1]
5	GU98622318	Vis	1	**Spécifications techniques:**Up to frame LG12199[T1]
6	GU31716560	Bobine HT	2	**Spécifications techniques:**Up to frame LG12199[T1]
7	GU98620240	Vis	2	**Spécifications techniques:**Up to frame LG12199[T1]
8	GU91180721	Entretoise	2	**Spécifications techniques:**Up to frame LG12199[T1]
9	GU98622218	Vis	2	**Spécifications techniques:**Up to frame LG12199[T1]
10	GU30717410	Pipe bougie NGK	2	**Spécifications techniques:**Up to frame LG12199[T1]
11	GU31717015	Bougie CHAMPION N3C	2	**Spécifications techniques:**Up to frame LG12199[T1]
11	GU31717060	Bougie NGK B8ES	2	**Spécifications techniques:**Up to frame LG12199[T1]
12	GU23721491	Centrale	2	**Spécifications techniques:**Up to frame LG12199[T1]
13	GU27723835	Support élastique	2	**Spécifications techniques:**Up to frame LG12199[T1]
14	GU27710435	Condensateur	1	**Spécifications techniques:**Up to frame LG12199[T1]
15	GU18759550	Cable	1	**Spécifications techniques:**Up to frame LG12199[T1]
16	GU31722140	Câblage HT	1	**Spécifications techniques:**Up to frame LG12199[T1]

Groupe	CHASSIS
Code	33.32
Description	Alimentation
Révision	1

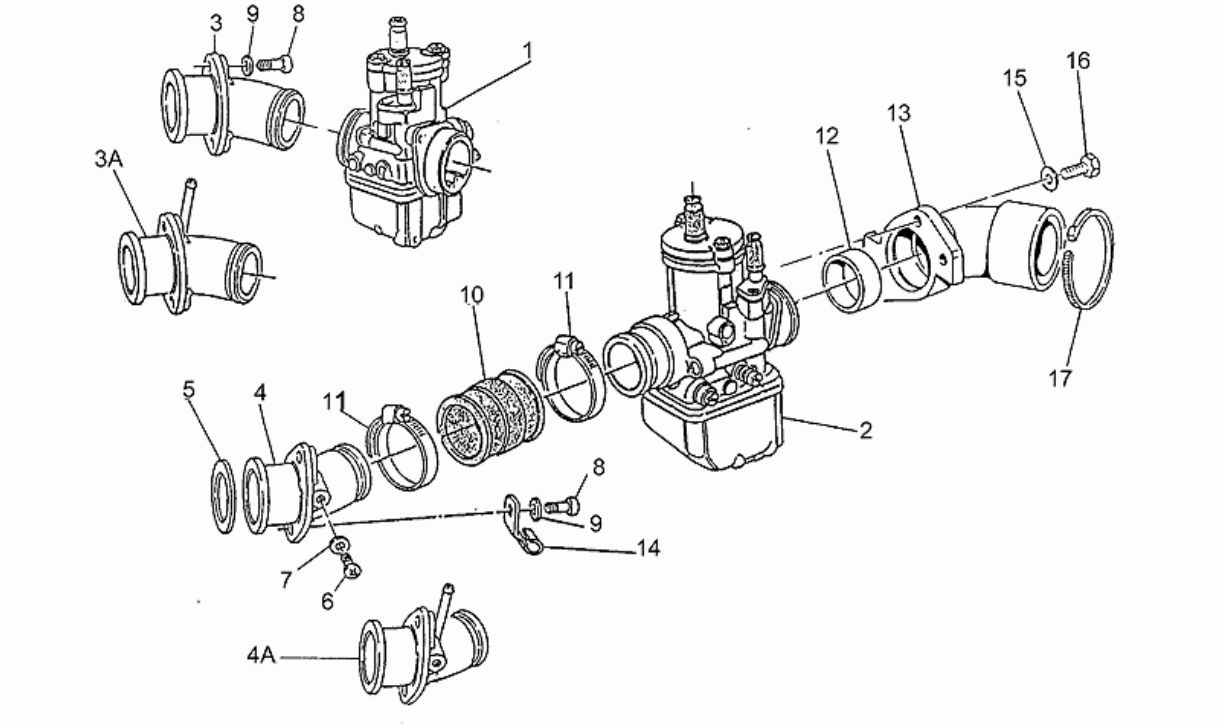

Pos.	Code	Description	Quant	Variants
1	GU31112680	Carburateur droit PHBH 28BD	1	
2	GU31112681	Carburateur gauche PHBH 28BS	1	
3	GU31115080	Collecteur aspiration dte	1	
3	GU31115082	Pipe d.	1	**Spécifications techniques:**See technical comm.n.302 of 1995[30295C], "A" letter in draw[A], Digiplex[DX]
4	GU31115081	Collecteur aspiration gche	1	
4	GU31115083	Pipe g.	1	**Spécifications techniques:**See technical comm.n.302 of 1995[30295C], "A" letter in draw[A], Digiplex[DX]
5	GU19115520	Joint	2	
6	GU98310610	Vis	2	
7	GU95100116	Rondelle 6,25x10x1,5	2	
8	GU98622325	Vis	4	
9	GU61013800	Rondelle spéciale	4	
10	GU31114380	Manchon	2	
11	GU93305031	Collier	4	
12	GU19114680	Bague d'étanchéité	2	
13	GU19114480	Collecteur	2	
14	GU19718000	Collier	2	
15	GU95004205	Rondelle	4	
16	GU98054220	Vis	4	
17	GU14609650	Collier 3,6x20,6	2	

Groupe	CHASSIS
Code	33.38
Description	Groupe echappement
Révision	1

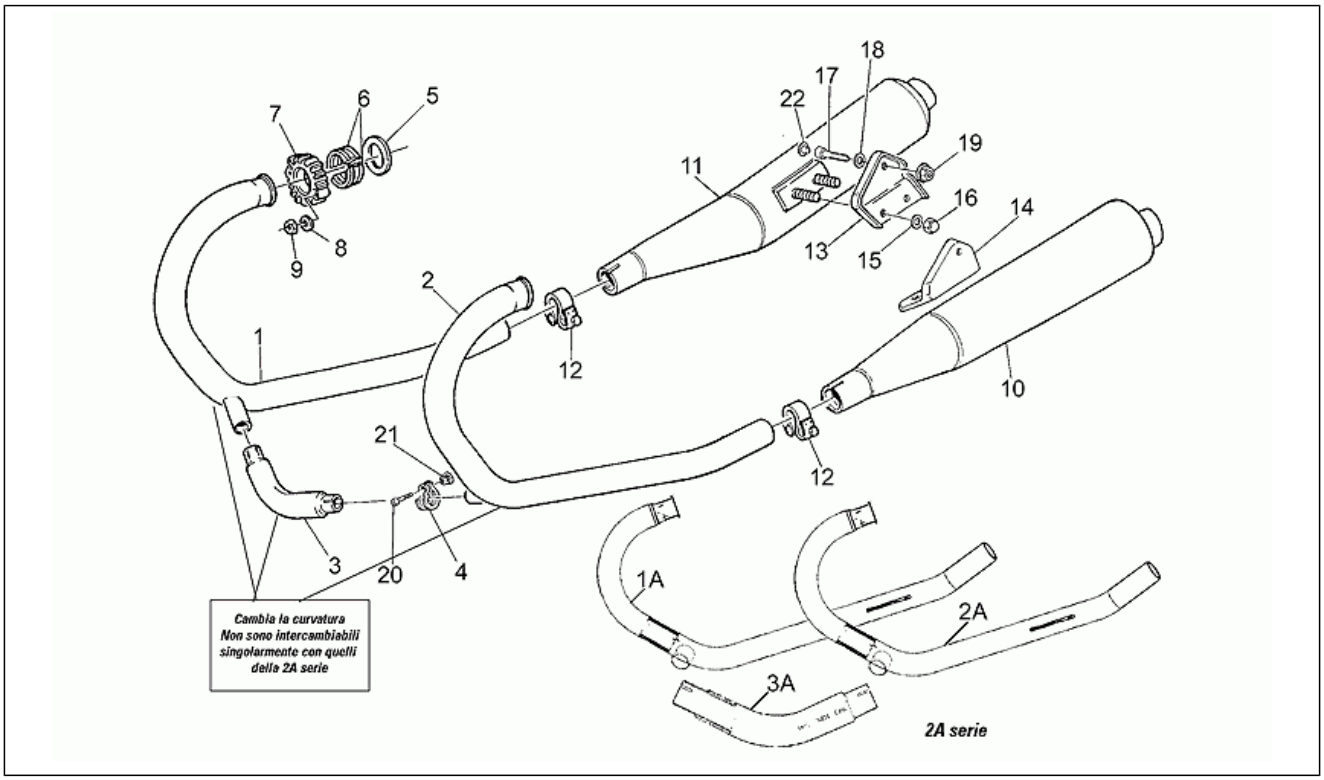

Pos.	Code	Description	Quant	Variants
1	GU31120780	Tuyau échappement d.	1	**Spécifications techniques:**See spare parts comm.n.018 of 1998[01898N], Order 31120782+31120783+31123981[O1]
1	GU31120782	Tuyau échappement d.	1	**Spécifications techniques:**See spare parts comm.n.018 of 1998[01898N], Second series[2A]
2	GU31120781	Tuyau échappement gche	1	**Spécifications techniques:**See spare parts comm.n.018 of 1998[01898N], Order 31120782+31120783+31123981[O1]
2	GU31120783	Tuyau échappement gche	1	**Spécifications techniques:**See spare parts comm.n.018 of 1998[01898N], Second series[2A]
3	GU31123980	Tuyau	1	**Spécifications techniques:**See spare parts comm.n.018 of 1998[01898N], Order 31120782+31120783+31123981[O1]
3	GU31123981	Tuyau	1	**Spécifications techniques:**See spare parts comm.n.018 of 1998[01898N], Second series[2A]
4	GU31126960	Collier	2	
5	GU19025280	Joint	2	
6	GU19025460	Entretoise	4	
7	GU19121050	Bague échappement	2	
8	GU61013800	Rondelle spéciale	4	
9	GU92701062	Ecrou	4	
10	GU31122960	Silencieux D	1	**Spécifications techniques:**See technical comm.n.319 del 1996[31996C]
11	GU31123060	Silencieux G	1	**Spécifications techniques:**See technical comm.n.319 del 1996[31996C]
12	GU31123460	Collier	2	
13	GU31128660	Plaque d.	1	
14	GU31128760	Plaque g.	1	
15	GU61270300	Rondelle élastique 8x15x0,3	6	
16	GU92781081	Ecrou	4	
17	GU98622420	Vis	2	
18	GU14615901	Rondelle 8,4X13X0,8	2	
19	GU92660008	Ecrou	2	

Groupe	CHASSIS
Code	33.38
Description	Groupe echappement
Révision	1

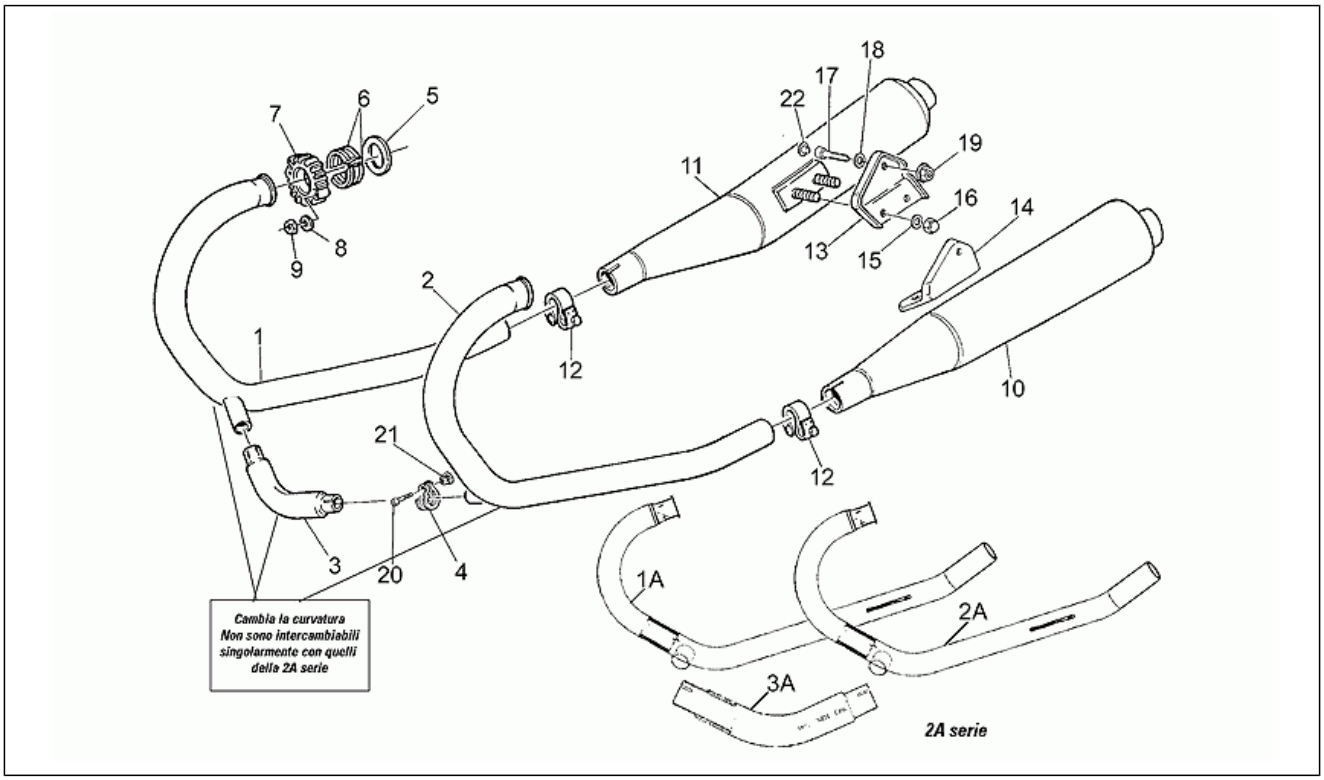

Pos.	Code	Description	Quant	Variants
20	GU61127520	Vis	2	
21	GU61127220	Bague	2	
22	GU23943410	Bouchon	2	

Groupe	CHASSIS
Code	33.40
Description	Levier boîte de vitesses
Révision	1

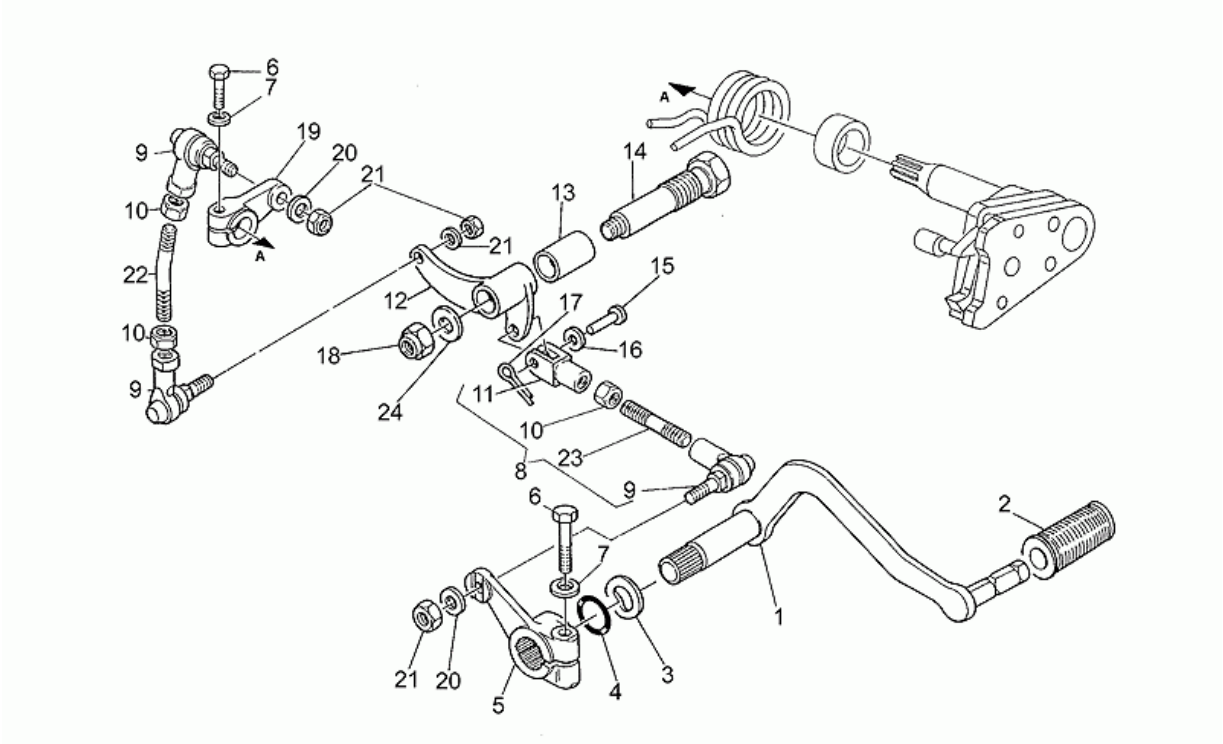

Pos.	Code	Description	Quant	Variants
1	GU31250960	Levier boîte de vitesses	1	
2	GU14251001	Caoutchouc	1	
3	GU95129260	Rondelle élastique	1	
4	GU90706141	Joint torique	2	
5	GU28256960	Levier	1	
6	GU98052325	Vis	2	
7	GU61013800	Rondelle spéciale	2	
8	GU31257880	Tige renvoi boîte de vitesses	1	
9	GU28258160	Fourchette	3	
10	GU92602206	Ecrou	4	
11	GU31626880	Fourchette	1	
12	GU31256960	Levier	1	
13	GU17252050	Bague	1	
14	GU31252360	Pivot	1	
15	GU95770265	Goupille	1	
16	GU95129110	Rondelle	1	
17	GU95500222	Goupille	1	
18	GU92630508	Ecrou	1	
19	GU19258220	Levier de commande	1	
20	GU61013800	Rondelle spéciale	3	
21	GU92630106	Ecrou M6x1	3	
22	GU18257950	Tirant	1	
23	GU96506040	Tige renvoi boîte de vitesses	1	
24	GU95004208	Rondelle	1	

Groupe	MOTEUR
Code	34.31
Description	Arbre moteur
Révision	1

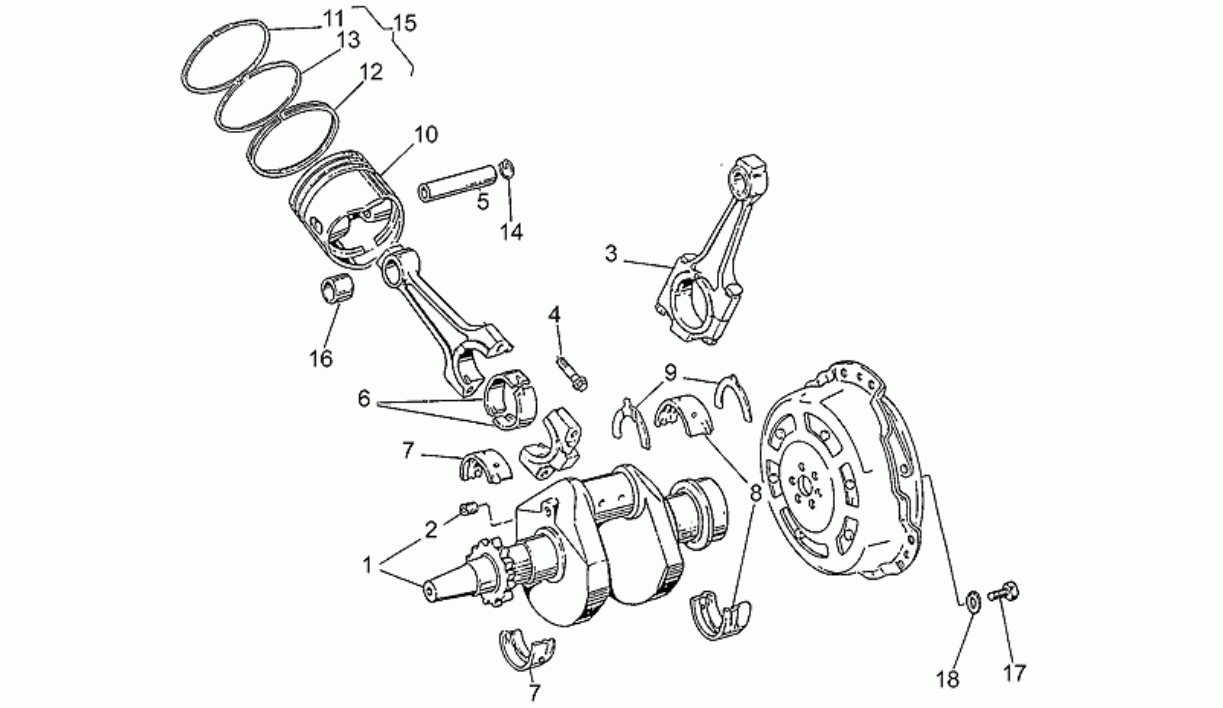

Pos.	Code	Description	Quant	Variants
1	GU19064121	Arbre moteur cpl.	1	
2	GU19065400	Bouchon	1	
3	GU19061521	Bielle	2	
4	GU19062221	Vis	4	
5	GU19061220	Axe	2	
6	GU19062020	Demi-coussinet	4	
7	GU19065623	Demi-couss.de vilebr.av.	2	
8	GU19066522	Demi-couss.de vilebr.ar.	2	
9	GU31066480	Butée	2	
10	GU31060480	Piston	2	
11	GU19060700	Segment d'étanchéité	2	
12	GU19061000	Segment d'étanchéité	2	
13	GU27060820	Segment d'étanchéité	2	
14	GU19061320	Bague de butée	4	
15	GU31060680	Segments - série	2	
16	GU19061820	Coussinet bronze	2	
17	GU19067700	Vis	6	
18	GU14615901	Rondelle 8,4X13X0,8	6	

Groupe	MOTEUR
Code	34.33
Description	Boîte de vitesses
Révision	1

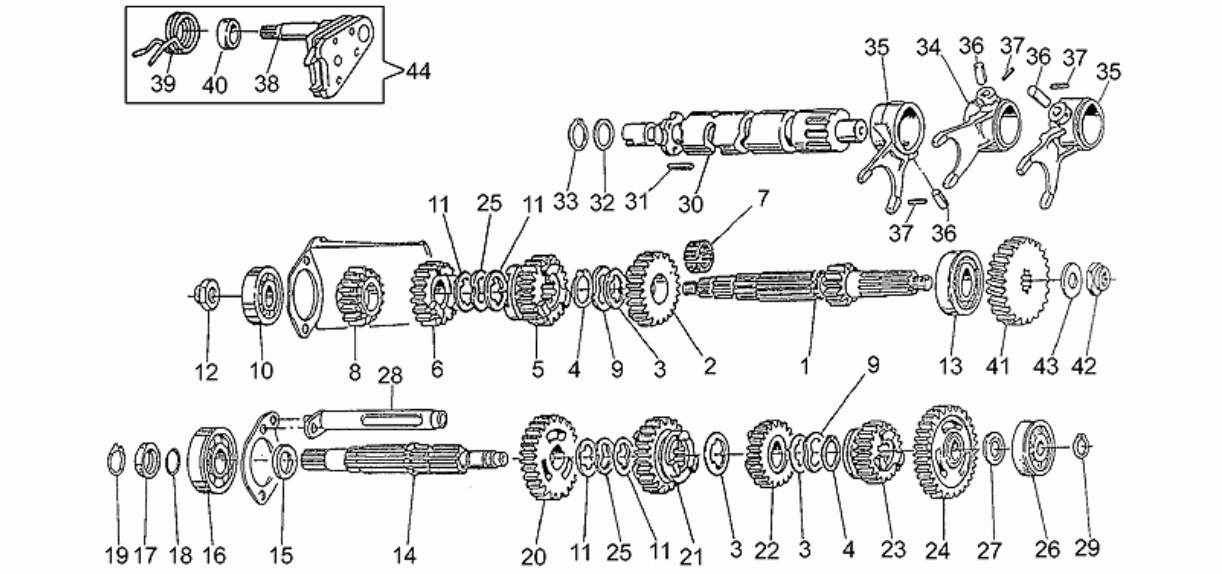

Pos.	Code	Description	Quant	Variants
1	GU23210570	Arbre primaire Z=11	1	
2	GU23212070	Engrenage 5a AP Z=20	1	
3	GU19215460	Rondelle éventail	3	
4	GU90271127	Bague seeger	2	
5	GU19211861	Engrenage 4a AP Z=18	1	
6	GU19211460	Engrenage 3a AP Z=18	1	
7	GU92251023	Cage à rouleaux	1	
8	GU19211361	Engrenage 2a AP Z=14	1	**Spécifications techniques:**Up to gearbox GH014245[C1]
8	GU23211372	Engrenage 2a AP Z=14	1	**Spécifications techniques:**See spare parts comm.n.013 of 1998[01398N], From gearbox GH014246[C2]
9	GU19218062	Rondelle	2	
10	GU92218417	Roulement AP 17x40x17,5	1	
11	GU19214660	Rondelle d'appui	4	
12	GU10054100	Ecrou	1	
13	GU92230320	Roulement AP 20x37x17	1	
14	GU19213661	Arbre secondaire	1	
15	GU19212900	Entretoise	1	
16	GU92201220	Roulement 20X47X14	1	
17	GU19213720	Entretoise	1	
18	GU90706188	Bague d'étanchéité 18,77X1,78	1	
19	GU90271121	Bague seeger	1	
20	GU23214571	Engrenage 2a AS Z=23	1	**Spécifications techniques:**Up to gearbox GH014245[C1]
20	GU23214572	Engrenage 2a AS Z=23	1	**Spécifications techniques:**See spare parts comm.n.013 of 1998[01398N], From gearbox GH014246[C2]
21	GU19214860	Engrenage 3a AS Z=23	1	
22	GU19215161	Engrenage 4a AS Z=19	1	
23	GU23215270	Engrenage 5a AS Z=18	1	
24	GU23214071	Engrenage 1a AS Z=26	1	

Groupe	MOTEUR
Code	34.33
Description	Boîte de vitesses
Révision	1

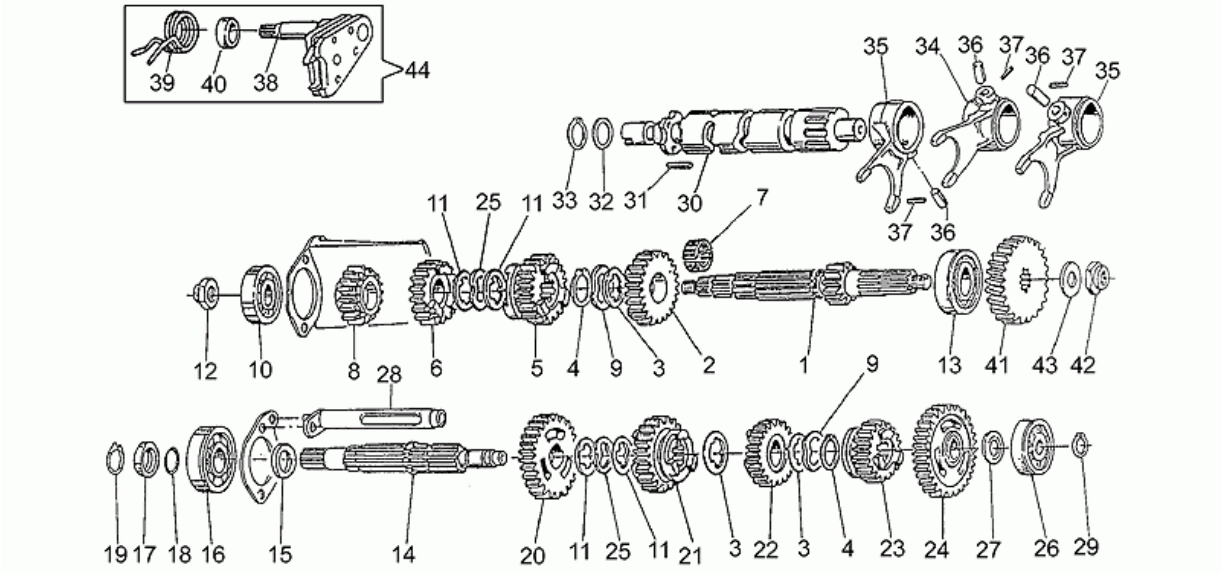

Pos.	Code	Description	Quant	Variants
25	GU19218061	Rondelle	2	
26	GU92234716	Roulement	1	
27	GU10214300	Cale 1,5 mm	1	
27	GU10214301	Cale 1,7 mm	1	
27	GU10214302	Cale 1,8 mm	1	
27	GU10214303	Cale 1,9 mm	1	
27	GU10214304	Rondelle 2 mm	1	
27	GU10214305	Cale 2,1 mm	1	
28	GU23202074	Egouttoir	1	
29	GU90271117	Bague seeger	1	
30	GU19234420	Desmodromique	1	
31	GU19234600	Tige	4	
32	GU19355300	Cale 1 mm	1	
33	GU90271020	Anneau élastique	1	
34	GU19231220	Fourchette AP	1	
35	GU19231020	Fourchette AS	2	
36	GU92297909	Rouleau	3	
37	GU95520316	Goupille	3	
38	GU20236220	Preselecteur complet	1	**Spécifications techniques:**See spare parts comm.n.013 of 1997[01397N], From gearbox GH3860[C4]
39	GU28238261	Ressort	1	**Spécifications techniques:**See spare parts comm.n.013 of 1997[01397N], From gearbox GH3860[C4]
39	GU61238200	Ressort	1	**Spécifications techniques:**Up to gearbox GH3859[C3]
40	GU20208520	Entretoise	1	**Spécifications techniques:**See spare parts comm.n.013 of 1997[01397N], From gearbox GH3860[C4]
40	GU91182010	Bague	1	**Spécifications techniques:**Up to gearbox GH3859[C3]
41	GU19211120	Engrenage Z=24	1	
42	GU10054100	Ecrou	1	
43	GU39238100	Rondelle d'appui	1	

Groupe	MOTEUR
Code	34.33
Description	Boîte de vitesses
Révision	1

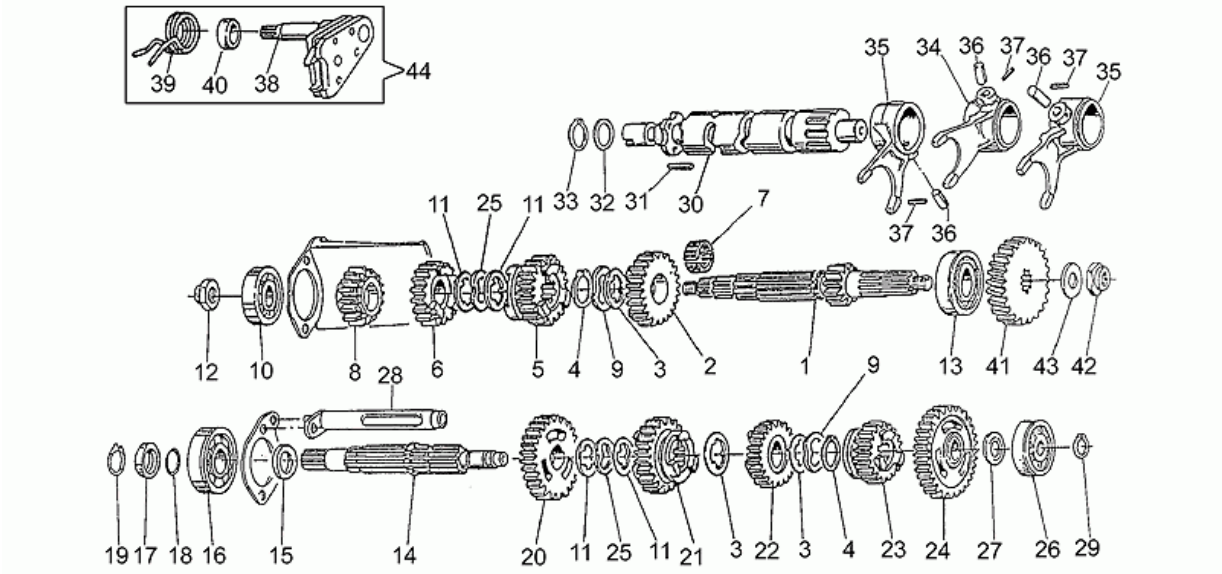

Pos.	Code	Description	Quant	Variants
44	GU20999520	Kit présélecteur	1	**Spécifications techniques:**See spare parts comm.n.013 of 1997[01397N], From gearbox GH3860[C4]

Groupe	MOTEUR
Code	34.34
Description	Carburateurs
Révision	1

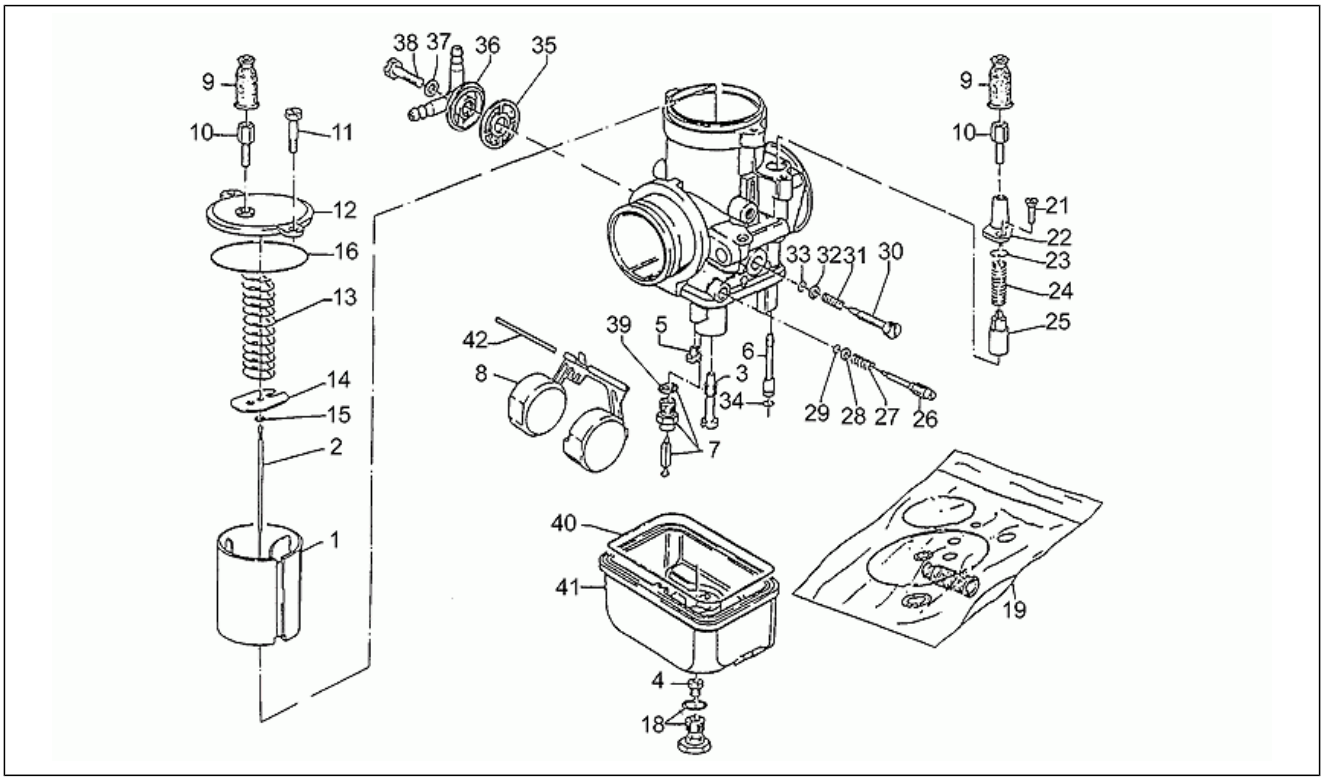

Pos.	Code	Description	Quant	Variants
1	GU27934820	Soupape gaz 30	2	
2	GU31937780	Pointeau conique X57	2	
3	GU27935521	Gicleur 262H	2	
4	GU19935750	Jet maximum 105	2	
5	GU23935910	Gicleur minimum 42	2	
6	GU19936000	Jet démarrage 60	2	
7	GU19934600	Vanne pointeau	2	
8	GU27934315	Flotteur gr.9,5	2	
9	0000000	Pneu s. chambre 110/90"	4	
10	GU12937200	Vis tendeur de fil	4	
11	GU14934650	Vis	2	
12	GU19935080	Couvercle	2	
13	0000000	Pneu s. chambre 110/90"	2	
14	GU19938580	Plaquette	2	
15	GU65933600	Agrafe pointeau conique	2	
16	0000000	Pneu s. chambre 110/90"	2	
18	GU27933720	Bouchon fix.bac	2	
19	GU19939980	Jeu de joints	1	
21	GU13937900	Vis	2	
22	GU17937450	Couvercle dispositif dém.	2	
23	0000000	Pneu s. chambre 110/90"	2	
24	GU39937600	Ressort de soupape	2	
25	GU13937800	Soupape de démarrage	2	
26	GU13936200	Vis réglage minimum	2	
27	GU13936300	Ressort	2	
28	GU65933700	Rondelle plate	2	
29	0000000	Pneu s. chambre 110/90"	2	
30	GU13936600	Vis réglage soupape gaz	2	

Groupe	MOTEUR
Code	34.34
Description	Carburateurs
Révision	1

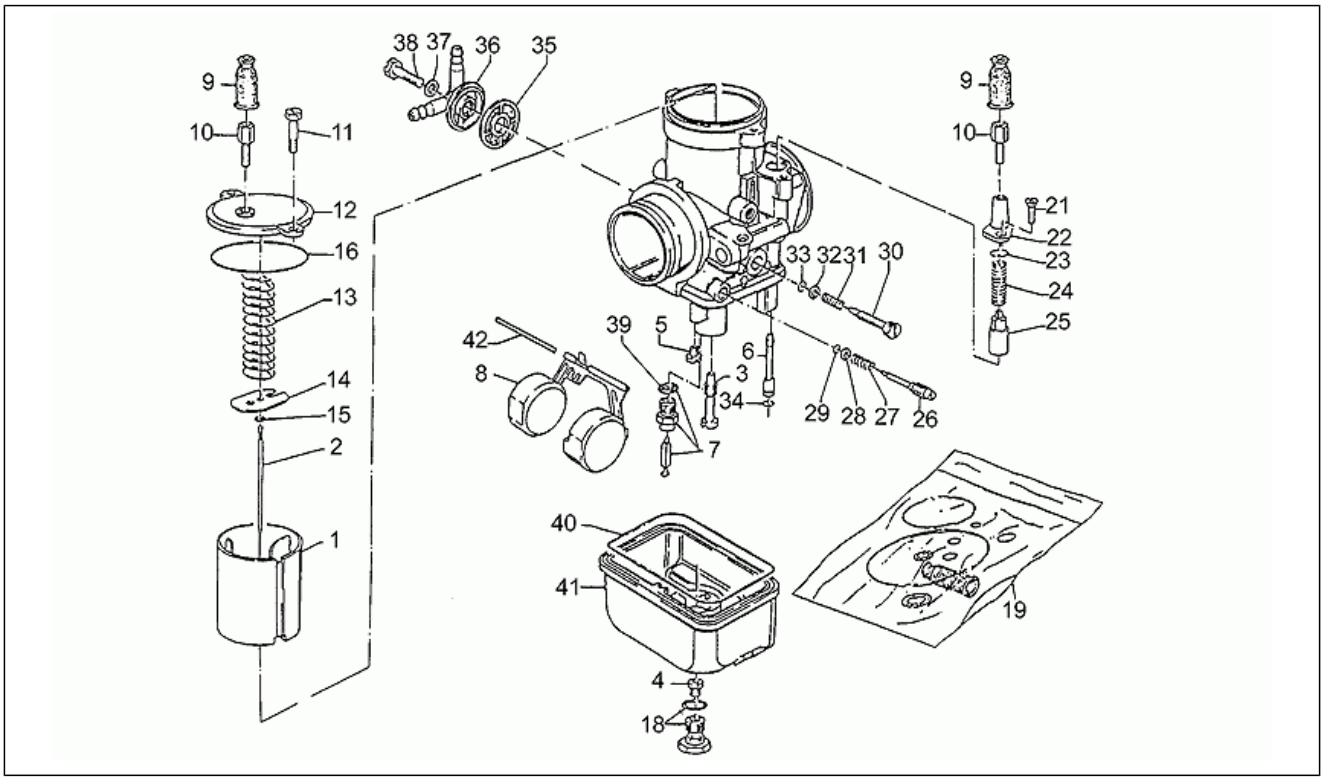

Pos.	Code	Description	Quant	Variants
31	GU13936700	Ressort	2	
32	GU14931650	Rondelle plate	2	
33	0000000	Pneu s. chambre 110/90"	2	
34	0000000	Pneu s. chambre 110/90"	2	
35	GU43934000	Filtre essence	2	
36	GU31934680	Pipette racc. tuyau essence	2	
37	GU13934700	Joint vis	2	
38	GU10934900	Vis fix.pipette	2	
39	0000000	Pneu s. chambre 110/90"	2	
40	0000000	Pneu s. chambre 110/90"	2	
41	GU19934480	Cuve aluminium	2	
41	GU31934460	Cuve plastica	2	**Spécifications techniques:**See spare parts comm.n.033 of 1999[03399N]
42	GU13933100	Axe flotteur	2	

Groupe	MOTEUR
Code	34.35
Description	Carter moteur
Révision	1

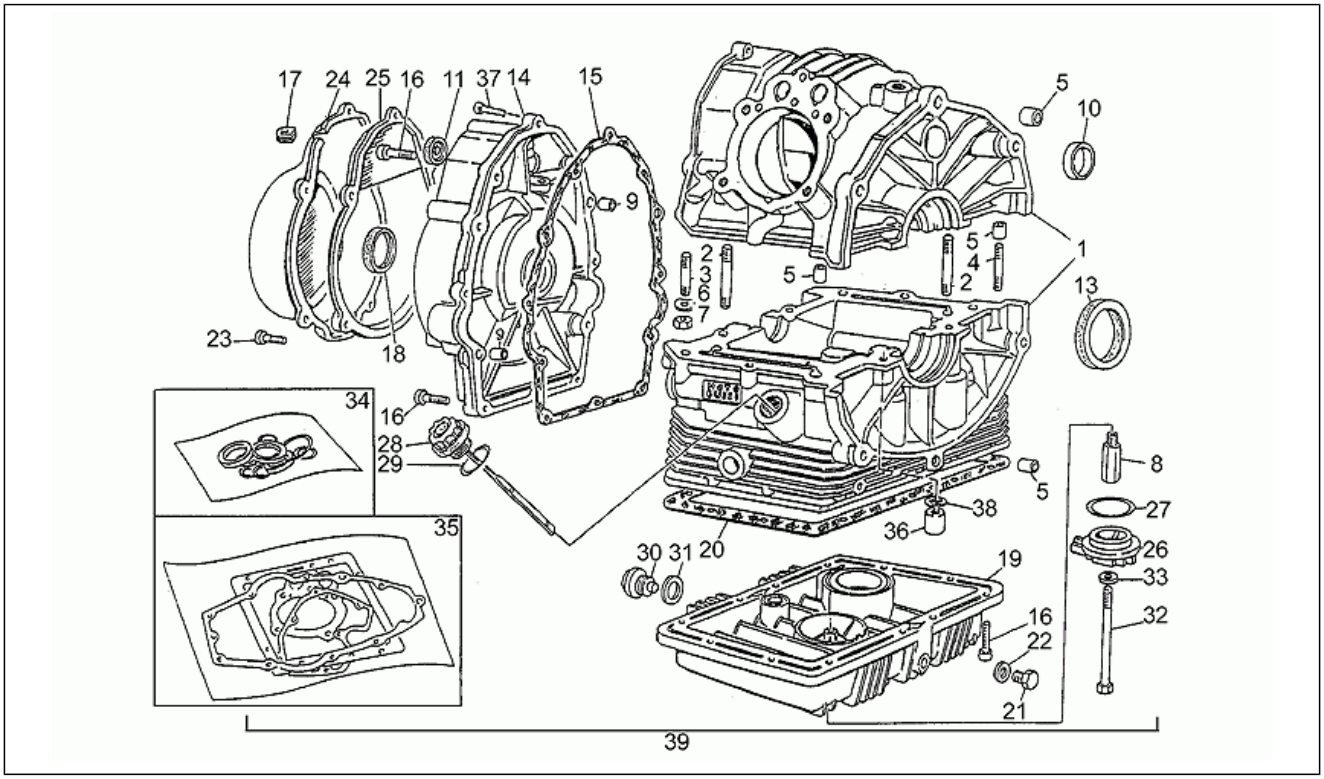

Pos.	Code	Description	Quant	Variants
1	GU19000321	Carter moteur grise	1	
1	GU31000380	Carter moteur grise	1	**Année:**1995[S], 1997[V], 1998[W], 1999[X], 2000[Y] **Spécifications techniques:**See technical comm.n.302 of 1995[30295C]
2	GU96451560	Vis sans tête	4	
3	GU96451430	Vis sans tête	4	
4	GU96508055	Vis sans tête	2	
5	GU19015020	Bague	4	
6	GU61270300	Rondelle élastique 8x15x0,3	6	
7	GU92602208	Ecrou	6	
8	GU19003800	Raccord	1	
9	GU19002020	Bague 6,6x9x13	2	
10	GU19016320	Bouchon	1	
11	GU90401530	Bague d'étanchéité	1	
13	GU04000500	Bague d'étanchéité	1	**Spécifications techniques:**From engine PC053625[M4]
13	GU90405367	Bague d'étanchéité	1	**Spécifications techniques:**Up to engine number <PC053624[M3]
14	GU19001460	Couvercle distribut. gris	1	
14	GU31001480	Couvercle gris	1	**Année:**1995[S], 1997[V], 1998[W], 1999[X], 2000[Y] **Spécifications techniques:**See technical comm.n.302 of 1995[30295C]
15	GU19001200	Joint	1	
16	GU98620325	Vis	22	
17	GU19007700	Caoutchouc	1	
18	GU90402840	Bague d'étanchéité 28x38x7	1	
19	GU20003510	Carter inférieur gris	1	**Année:**1995[S], 1997[V], 1998[W], 1999[X], 2000[Y] **Spécifications techniques:**See technical comm.n.302 of 1995[30295C]
19	GU27003585	Carter huile moteur brut	1	**Couleur véhicule:**Brut[gr]
20	GU19003602	Joint	1	

Groupe	MOTEUR
Code	34.35
Description	Carter moteur
Révision	1

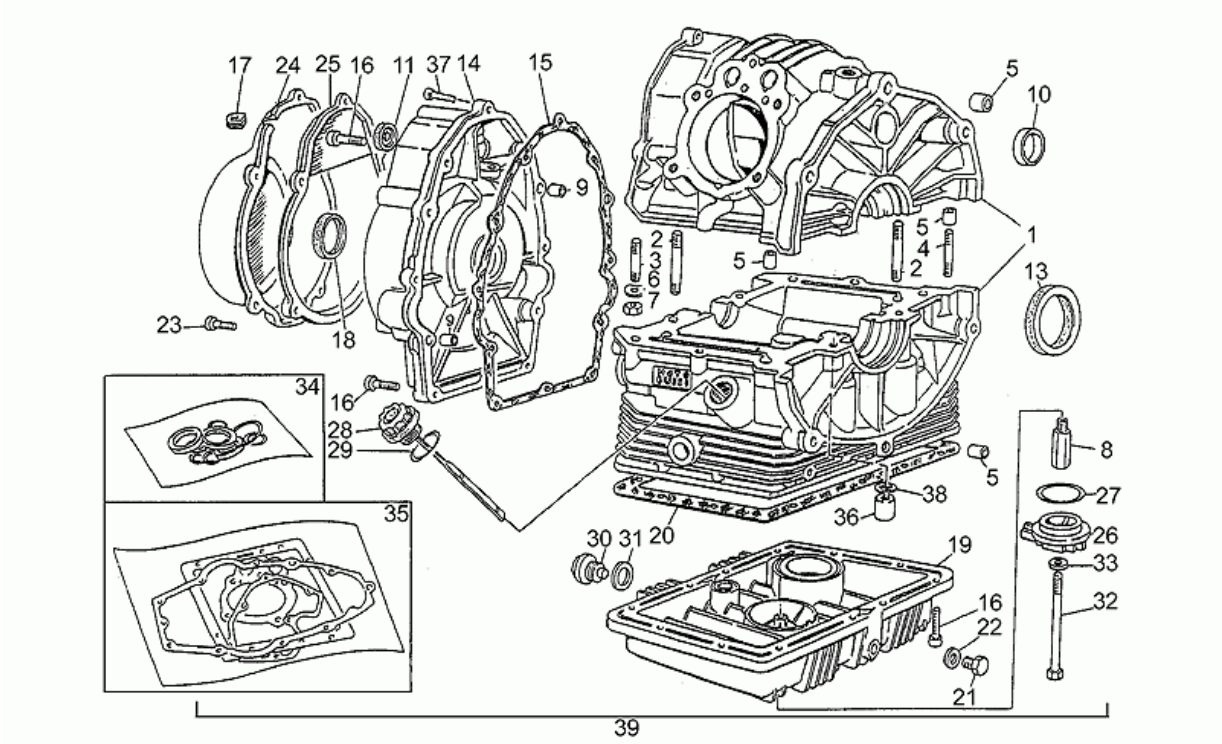

Pos.	Code	Description	Quant	Variants
21	GU31003766	Bouchon vid.huile M10x1	1	
22	GU10528900	Garniture	1	
23	GU98620335	Vis M6x35	5	
24	GU27001636	Couvercle	1	
25	GU27001136	Bride	1	
26	GU19003400	Couvercle brut	1	
26	GU20003410	Petit couvercle gris	1	**Année:**1995[S], 1997[V], 1998[W], 1999[X], 2000[Y] **Spécifications techniques:**See technical comm.n.302 of 1995[30295C]
27	GU90706444	Joint torique	1	
28	GU27004985	Bouchon rempl. huile	1	
29	GU90706282	Bague d'étanchéité	1	
30	GU12003702	Bouchon vid.huile	1	
31	GU95100709	Joint 20,1x28x2	1	
32	GU27152885	Boulon	1	
33	GU12154200	Joint 8,25x15x1	1	
34	GU19999580	Joint spy-série	1	
35	GU19999021	Joints moteur-série	1	
36	GU13021900	Ecrou colonne	4	
37	GU98620330	Vis	2	
38	GU95129180	Rondelle 10,5X18X0,8	4	
39	GU31991080	Moteur sans boîte de v. MOTOPLAT	1	
39	GU31991082	Moteur complet	1	**Année:**1995[S], 1997[V], 1998[W], 1999[X], 2000[Y] **Spécifications techniques:**See technical comm.n.302 of 1995[30295C], Digiplex[DX]

Groupe	MOTEUR
Code	34.36
Description	Distribution
Révision	1

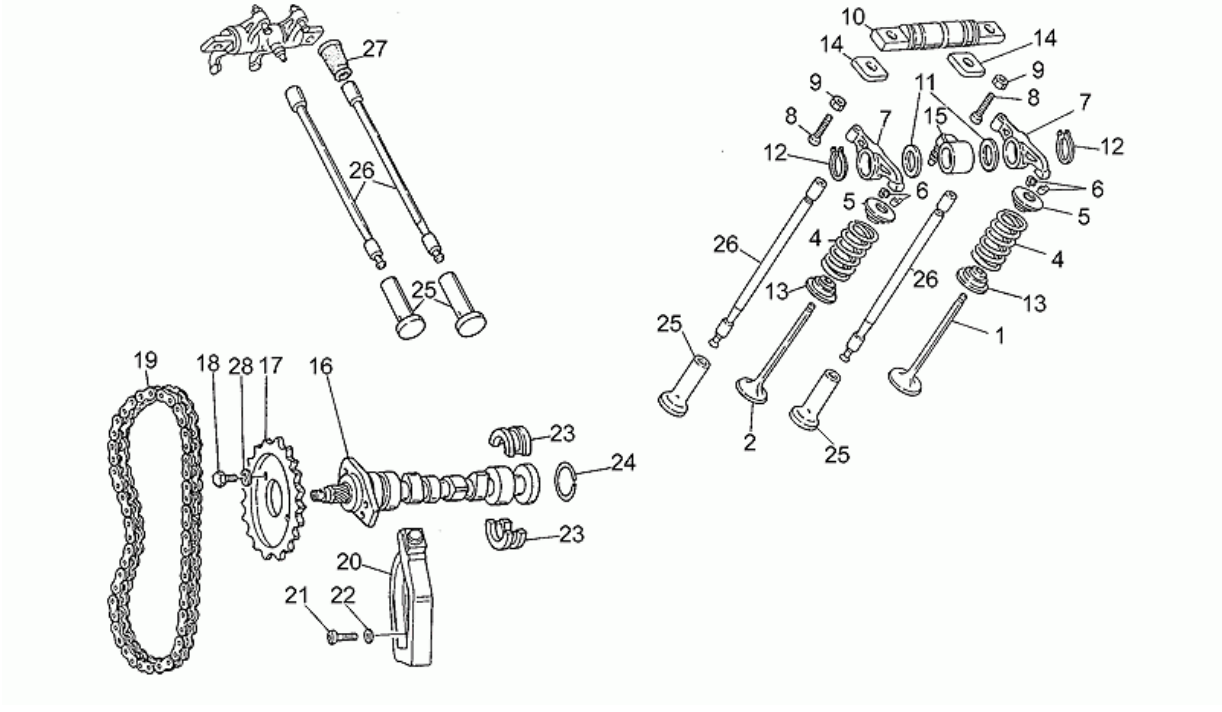

Pos.	Code	Description	Quant	Variants
1	GU19036021	Soupape d'admission	2	
2	GU23036100	Soupape d'échappement	2	
4	GU27037521	Ressort	4	
5	GU31038015	Coupelle supérieur	4	
6	GU61038100	Demi-clavette	8	
7	GU19030500	Culbuteur	4	
8	GU19034000	Vis	4	
9	GU92602406	Ecrou M6x1	4	
10	GU19032000	Axe culbuteur	2	
11	GU19032300	Rondelle d'appui	4	
12	GU90271018	Bague seeger	4	
13	GU31037015	Coupelle inférieure	4	
14	GU19032980	Cale	4	
15	GU19027500	Manchon	2	
16	GU27053463	Arbre à cames	1	
17	GU19054521	Engrenage distribution	1	
18	GU61054900	Boulon	2	
19	GU19058021	Chaîne de distribution	1	
20	GU19058220	Tendeur de chaine	1	
21	GU98822316	Vis	1	
22	GU95129115	Rondelle	1	
23	GU19055700	Secteur	2	
24	GU90353029	Anneau élastique	1	
25	GU19045861	Poussoir	4	
26	GU19045020	Culbuteur tige	4	
27	GU27045420	Capuchon	4	
28	GU23217800	Rondelle de séreté	2	

Groupe	MOTEUR
Code	34.37
Description	Embrayage
Révision	1

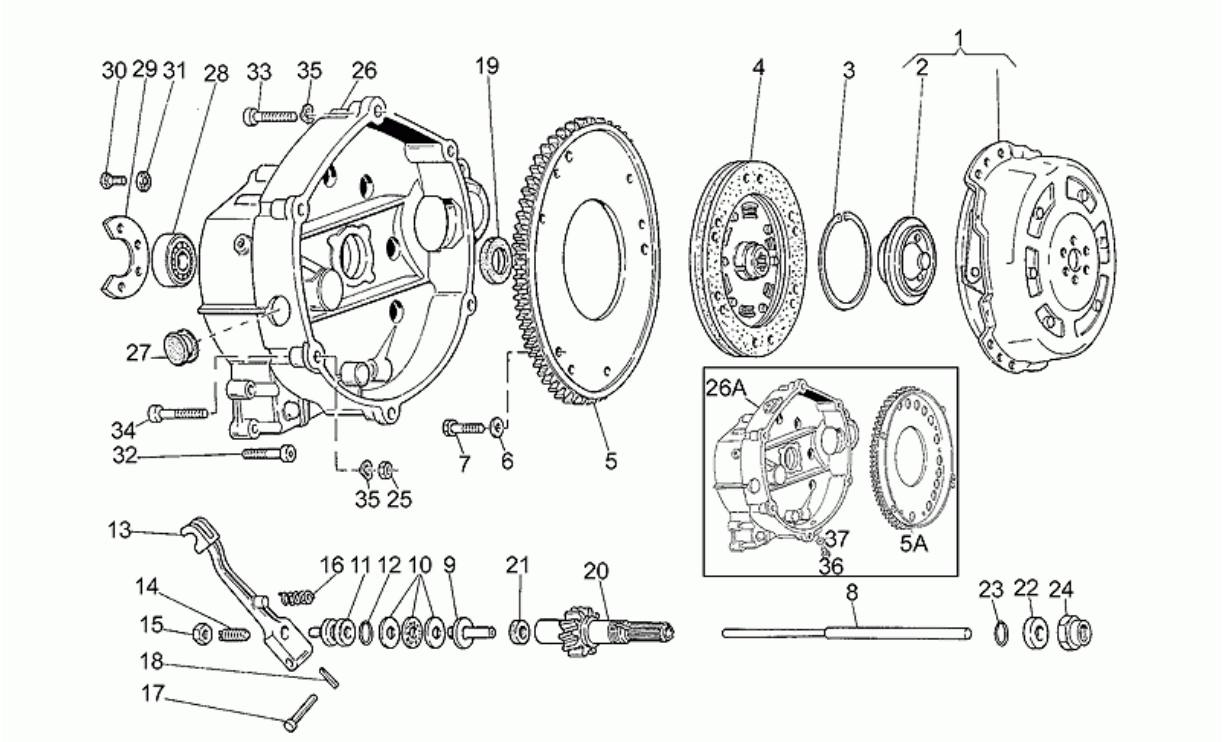

Pos.	Code	Description	Quant	Variants
1	GU19080161	Commande embrayage	1	
2	GU19083462	Cuvette	1	
3	GU90272075	Anneau élastique	1	
4	GU27084460	Disque embrayage mené	1	
5	GU19067900	Couronne MOTOPLAT	1	**Spécifications techniques:**Motoplat[MT]
5	GU31067980	Couronne	1	**Spécifications techniques:**Digiplex[DX]
6	GU14217901	Rondelle 6,4x10x0,7	6	
7	GU98054316	Vis	6	
8	GU19085701	Tige	1	
9	GU14086000	Corps intérieur	1	
10	GU12087001	Palier poussée	1	
11	GU14086100	Corps extérieur	1	
12	GU90706170	Joint torique 17,13x2,62	1	
13	GU14090201	Débrayage	1	
14	GU14090400	Vis embrayage	1	
15	GU92602508	Ecrou M8x1	1	
16	GU94321105	Retour levier démarrage	1	
17	GU95780271	Goupille 7x39	1	
18	GU95500222	Goupille	1	
19	GU90403245	Bague d'étanchéité	1	
20	GU31210780	Arbre trnsmission Z=13	1	
21	GU90400616	Bague d'étanchéité 6x16x7	1	
22	GU19213760	Entretoise	1	
23	GU90706235	Joint torique 23,52x1,78	1	
24	GU19356760	Ecrou	1	
25	GU92602208	Ecrou	1	
26	GU19200462	Cloche embrayage	1	**Spécifications techniques:**Motoplat[MT]
26	GU31200465	Cloche embrayage grise	1	**Spécifications techniques:**Digiplex[DX]

Groupe	MOTEUR
Code	34.37
Description	Embrayage
Révision	1

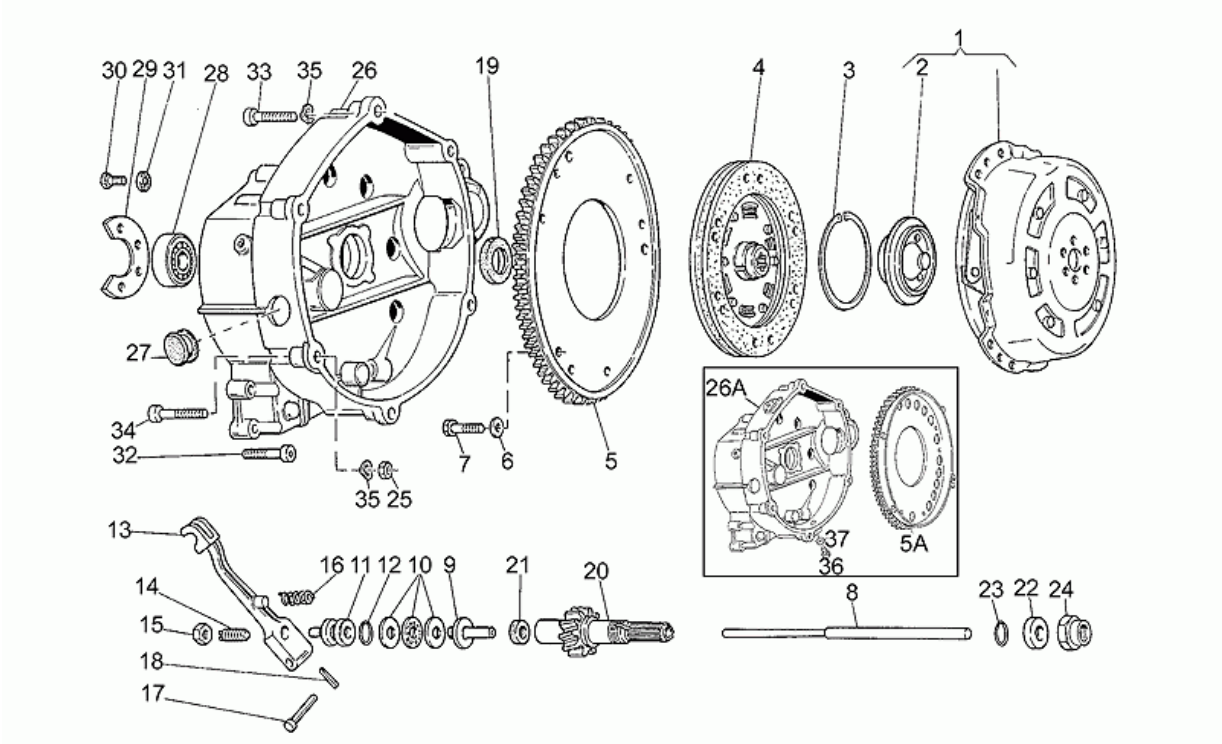

Pos.	Code	Description	Quant	Variants
26	GU31200480	Cloche embrayage grise DIGIP.	1	**Année:**1995[S], 1997[V], 1998[W], 1999[X], 2000[Y] **Spécifications techniques:**See technical comm.n.302 of 1995[30295C], Digiplex[DX]
27	GU93180220	Bouchon	1	
28	GU92201225	Roulement 25x52x15	1	
29	GU19203460	Plaque fixation palier	1	
30	GU98054314	Vis	3	
31	GU14217901	Rondelle 6,4x10x0,7	3	
32	GU98620330	Vis	11	
33	GU98620435	Vis	5	
34	GU98620450	Vis	1	
35	GU61270300	Rondelle élastique 8x15x0,3	6	
36	GU31003766	Bouchon vid.huile M10x1	1	**Spécifications techniques:**Digiplex[DX]
37	GU95004210	Rondelle 10,2x18x2	1	**Spécifications techniques:**Digiplex[DX]

Groupe	MOTEUR
Code	34.39
Description	Démarreur
Révision	1

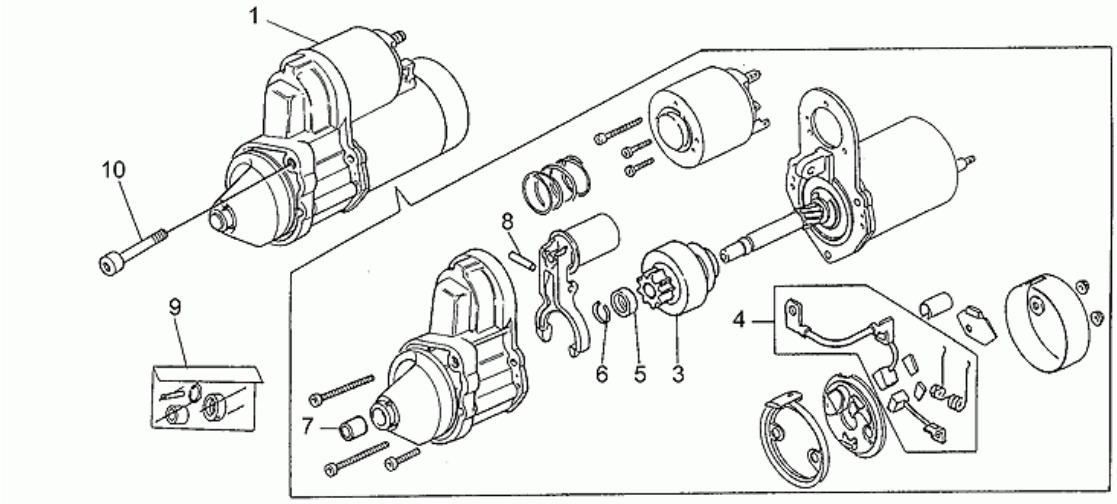

Pos.	Code	Description	Quant	Variants
1	GU30730711	Démarreur Valeo	1	
3	GU30530510	Pignon compléte	1	
4	GU30530511	Kit de révision brosse	1	
5	0000000	Pneu s. chambre 110/90"	1	
6	0000000	Pneu s. chambre 110/90"	1	
7	0000000	Pneu s. chambre 110/90"	1	
8	0000000	Pneu s. chambre 110/90"	1	
9	GU30530512	Kit rév. démarreur	1	
10	GU98620435	Vis	2	

Groupe	MOTEUR
Code	34.41
Description	Pompe huile
Révision	1

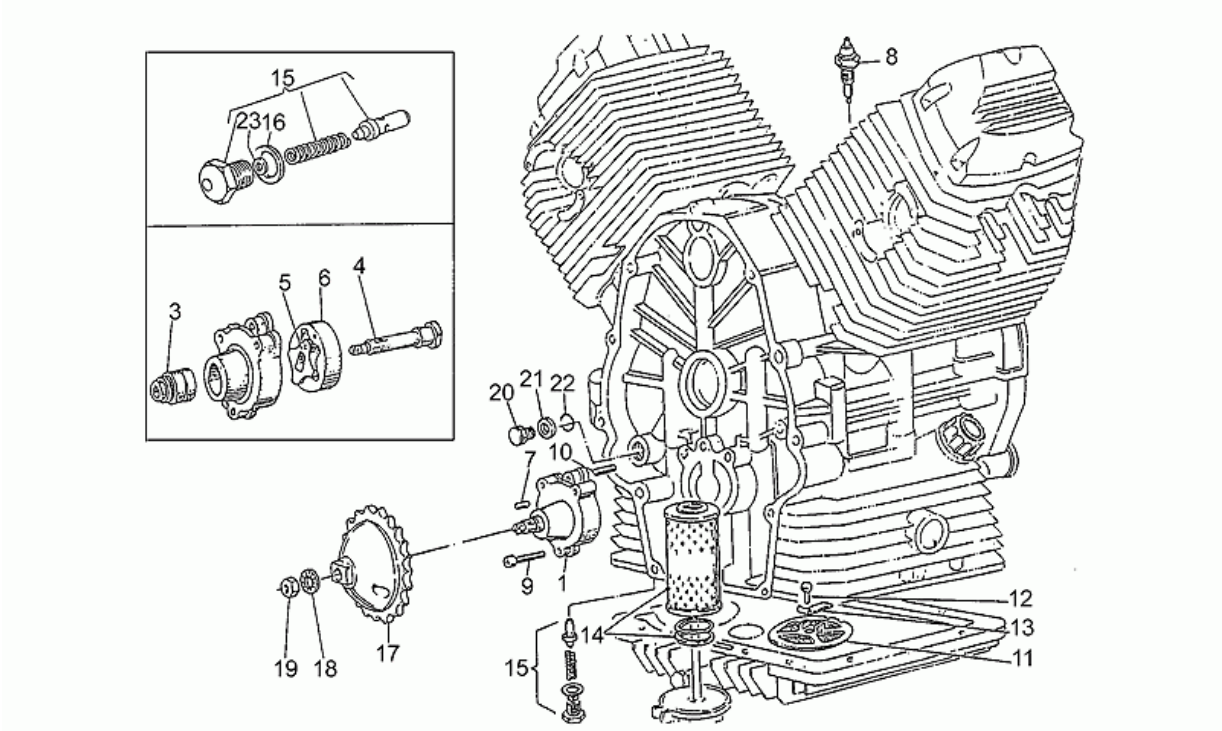

Pos.	Code	Description	Quant	Variants
1	GU19146420	Pompe huile	1	**Spécifications techniques:**Up to engine PC52304[M1]
1	GU19146422	Pompe huile	1	**Spécifications techniques:**From engine PC52305[M2]
3	GU92252210	Roulement à rouleaux 10x22x20	1	
4	GU19147820	Arbre pompe huile	1	**Spécifications techniques:**Up to engine PC52304[M1]
4	GU20147810	Arbre pompe huile	1	**Spécifications techniques:**From engine PC52305[M2]
5	GU19148420	Rotor intérieur	1	**Spécifications techniques:**Up to engine PC52304[M1]
5	GU20148410	Rotor intérieur	1	**Spécifications techniques:**From engine PC52305[M2]
6	GU19148620	Rotor extérieur	1	**Spécifications techniques:**Up to engine PC52304[M1]
6	GU20148610	Rotor extérieur	1	**Spécifications techniques:**From engine PC52305[M2]
7	GU92296723	Rouleau	1	**Spécifications techniques:**From engine PC52305[M2]
7	GU92296726	Rouleau guide	1	**Spécifications techniques:**Up to engine PC52304[M1]
8	GU31999581	Détecteur pression	1	**Spécifications techniques:**See spare parts comm.n.022 of 2001[02201N]
9	GU98620335	Vis M6x35	3	
10	GU19018920	Goupille	2	
11	GU19152200	Filtre à huile	1	
12	GU98054314	Vis	1	
13	GU95187006	Plaquette	1	
14	GU27153085	Filtre à huile	1	
15	GU31158250	Oil pressure valve	1	
16	GU18144350	Rondelle 18,25x24x1	3	
17	GU19147721	Engrenage pompe huile	1	**Spécifications techniques:**Up to engine PC52304[M1]
17	GU20147710	Pignon de pompe	1	**Spécifications techniques:**From engine PC52305[M2]
18	GU19149800	Rondelle 10,5x16x1	1	
19	GU92602510	Ecrou M10x1,25	1	
20	GU31016050	Bouchon	1	
21	GU18161150	Garniture 14,25	1	
22	GU90706111	Joint torique	1	

Groupe	MOTEUR
Code	34.41
Description	Pompe huile
Révision	1

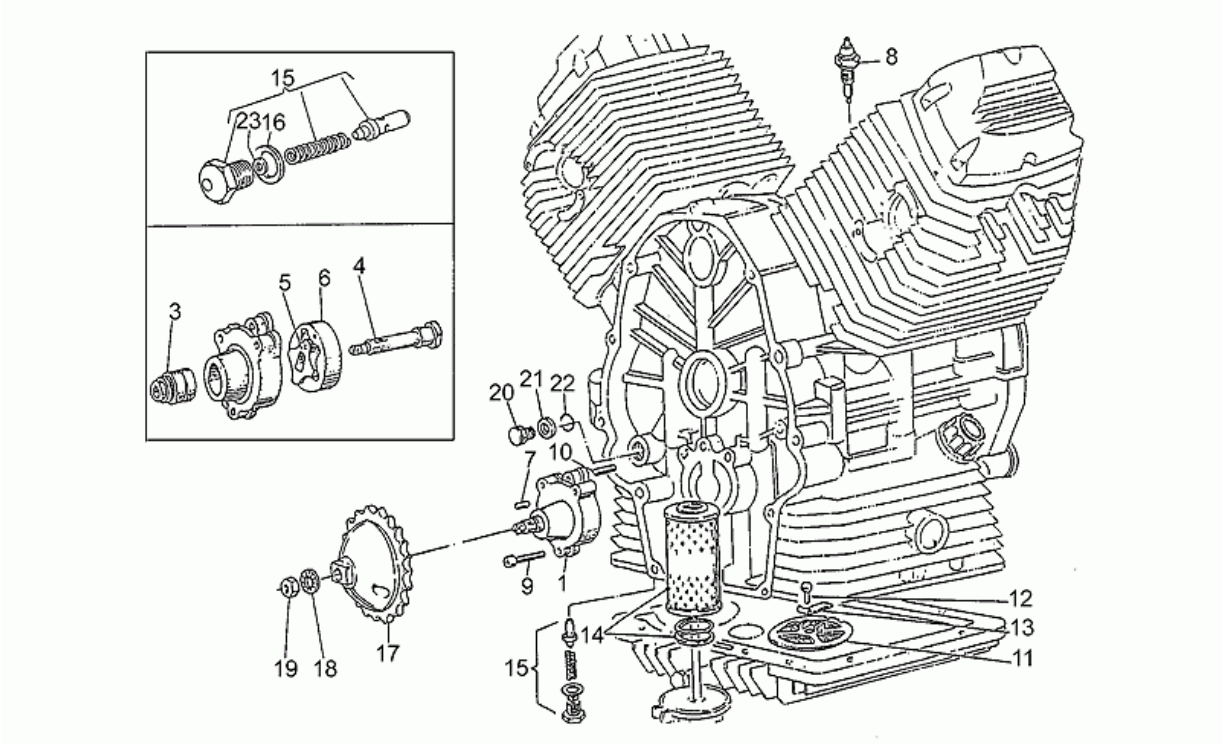

Pos.	Code	Description	Quant	Variants
23	GU95004206	Rondelle 6,15x11x0,8	1	

PIAGGIO&C.s.p.a.

Groupe	MOTEUR
Code	34.42
Description	Carter de boîte vitesses
Révision	1

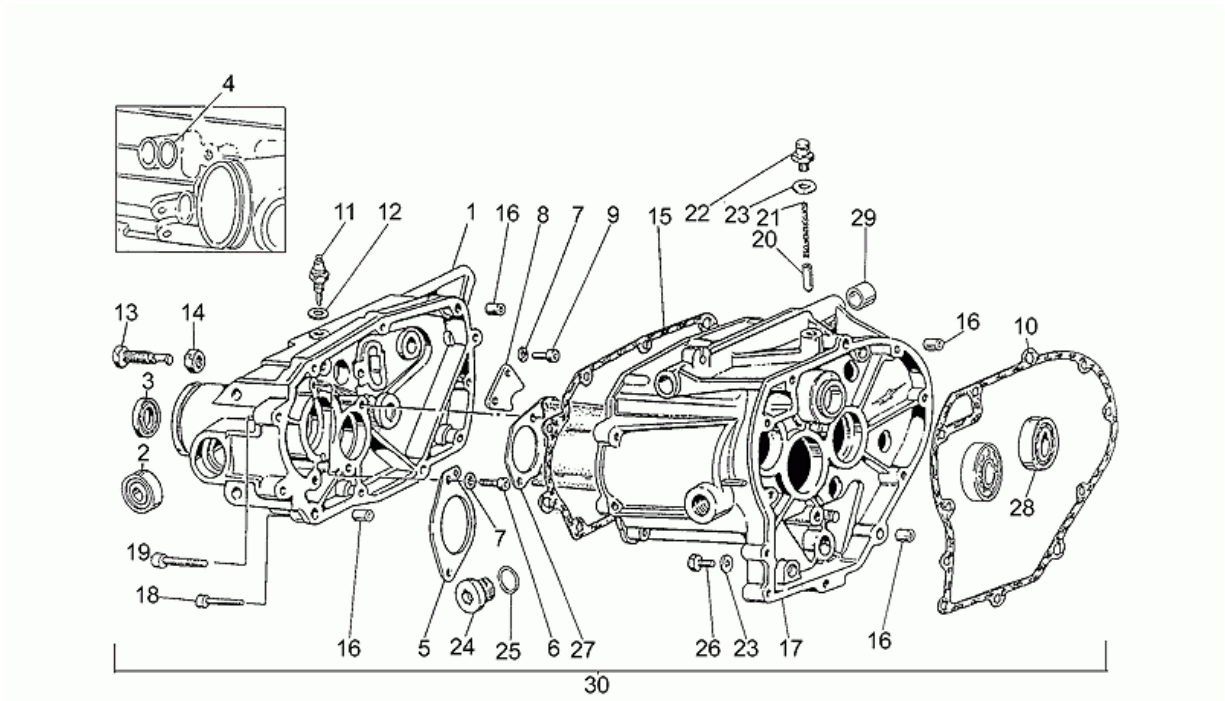

Pos.	Code	Description	Quant	Variants
1	GU19200861	Couvercle boîte gris	1	
1	GU31200880	Couvercle boîte vit. gris	1	**Année:**1995[S], 1997[V], 1998[W], 1999[X], 2000[Y] **Spécifications techniques:**See technical comm.n.302 of 1995[30295C]
2	GU92204215	Roulement 15x35x11	2	
3	GU90402841	Bague d'étanchéité 28x40x7	1	
4	GU90706140	Joint torique 13,95x2,92	1	
5	GU23213870	Plaque	1	**Spécifications techniques:**Up to gearbox GH014245[C1]
5	GU23213872	Plaque	1	**Spécifications techniques:**See spare parts comm.n.013 of 1998[01398N], From gearbox GH014246[C2]
6	GU98622314	Vis	4	
7	GU14217901	Rondelle 6,4x10x0,7	6	
8	GU19235800	Plaque	1	
9	GU98622314	Vis	2	
10	GU23200370	Joint	1	
11	GU19207220	Capteur	1	
12	GU12154200	Joint 8,25x15x1	1	
13	GU19237800	Vis M12x1,25	1	
14	GU92602512	Ecrou bas M12x1,25	1	
15	GU19201120	Joint	1	
16	GU19002020	Bague 6,6x9x13	4	
17	GU19200261	Boîte de vitesses grise	1	
17	GU31200280	Boîte de vitesses grise	1	**Année:**1995[S], 1997[V], 1998[W], 1999[X], 2000[Y] **Spécifications techniques:**See technical comm.n.302 of 1995[30295C]
18	GU98620330	Vis	5	
18	GU98620335	Vis M6x35	2	
19	GU98620435	Vis	4	
20	GU55234700	Encliquetage	1	

Groupe	MOTEUR
Code	34.42
Description	Carter de boîte vitesses
Révision	1

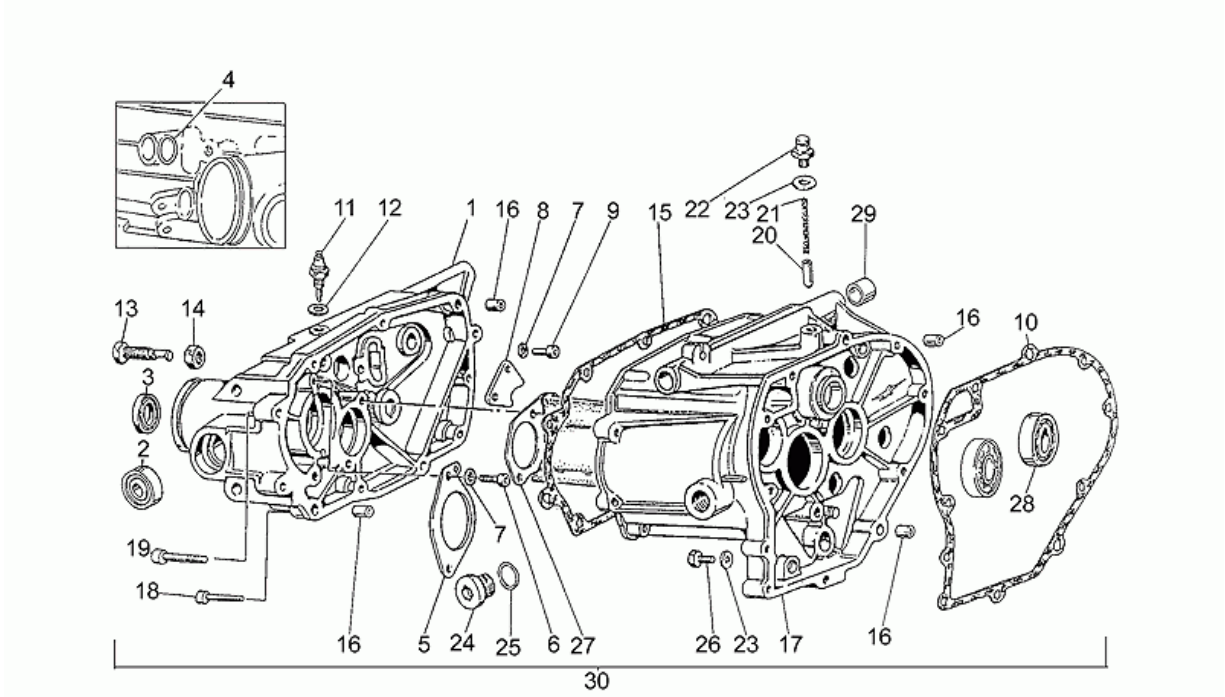

Pos.	Code	Description	Quant	Variants
21	GU94321067	Retour levier démarrage	1	
22	GU19206501	Bouchon purge	1	
23	GU10528900	Garniture	2	
24	GU19351200	Bouchon huile	1	
25	GU90706203	Joint torique 20,24X2,62	1	
26	GU31003766	Bouchon vid.huile M10x1	1	**Spécifications techniques:**Up to gearbox GH014245[C1]
27	GU19208220	Huile cloison	1	
27	GU23208272	Huile cloison	1	**Spécifications techniques:**See spare parts comm.n.013 of 1998[01398N], From gearbox GH014246[C2]
28	GU92201120	Roulement à billes 20x42x12	1	
29	GU19202320	Bague 10,25x15,7x8	2	
30	GU31991580	Boîte vitesses cpl. grise	1	
30	GU31991582	Boîte de vitesses cpl.	1	**Année:**1995[S], 1997[V], 1998[W], 1999[X], 2000[Y] **Spécifications techniques:**See technical comm.n.302 of 1995[30295C], Digiplex[DX]

Groupe	MOTEUR
Code	34.43
Description	Tête cylindre
Révision	1

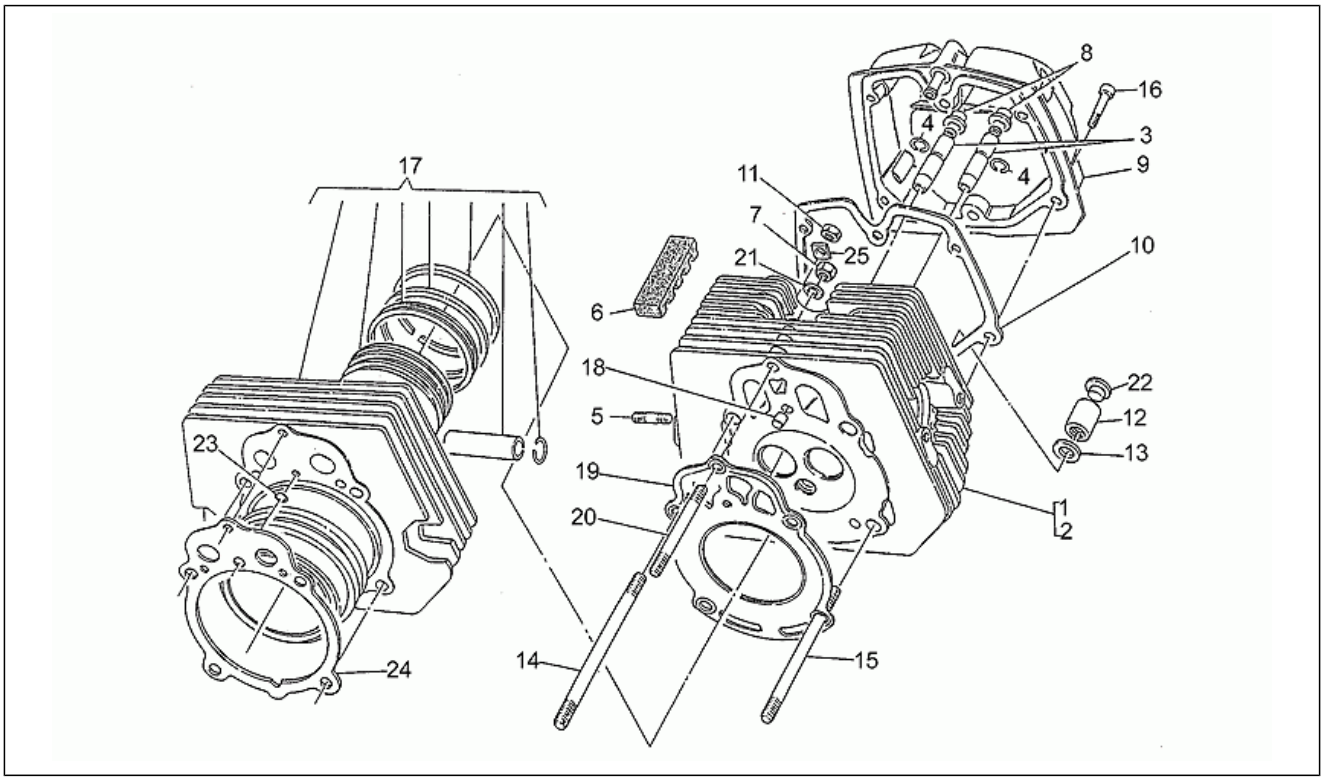

Pos.	Code	Description	Quant	Variants
1	GU19022121	Culasse d.gris	1	
1	GU31022180	Culasse d.gris	1	**Année:**1995[S], 1997[V], 1998[W], 1999[X], 2000[Y] **Spécifications techniques:**See technical comm.n.302 of 1995[30295C]
2	GU19022221	Culasse g.gris	1	
2	GU31022280	Culasse g.gris	1	**Année:**1995[S], 1997[V], 1998[W], 1999[X], 2000[Y] **Spécifications techniques:**See technical comm.n.302 of 1995[30295C]
3	GU61036801	Guide soupape	4	
4	GU90353009	Anneau élastique	4	
5	GU96506042	Vis sans tête	4	
6	GU19025300	Plaquette antivibratile	4	
7	GU19021920	Ecrou	2	
8	GU19037820	Joint spi	4	
9	GU31023500	Couvercle soupapes inox	2	
10	GU19023700	Joint	2	
11	GU92603010	Ecrou M10X1,5	4	
12	GU13021900	Ecrou colonne	4	
13	GU95129180	Rondelle 10,5X18X0,8	4	
14	GU96510182	Vis sans tête	4	
15	GU96510125	Vis sans tête 125 mm	4	**Spécifications techniques:**Up to engine PC52304[M1]
15	GU96510145	Vis sans tête 145 mm	4	**Spécifications techniques:**From engine PC52305[M2]
16	GU98622325	Vis	10	
17	GU31060180	Cylindre - Piston cpl.	2	
17	GU31060181	Cylindre av.piston cpl.	2	**Année:**1995[S], 1997[V], 1998[W], 1999[X], 2000[Y] **Spécifications techniques:**See technical comm.n.302 of 1995[30295C]
18	GU19021320	Bague	2	
19	GU27022020	Joint tête	2	

Groupe	MOTEUR
Code	34.43
Description	Tête cylindre
Révision	1

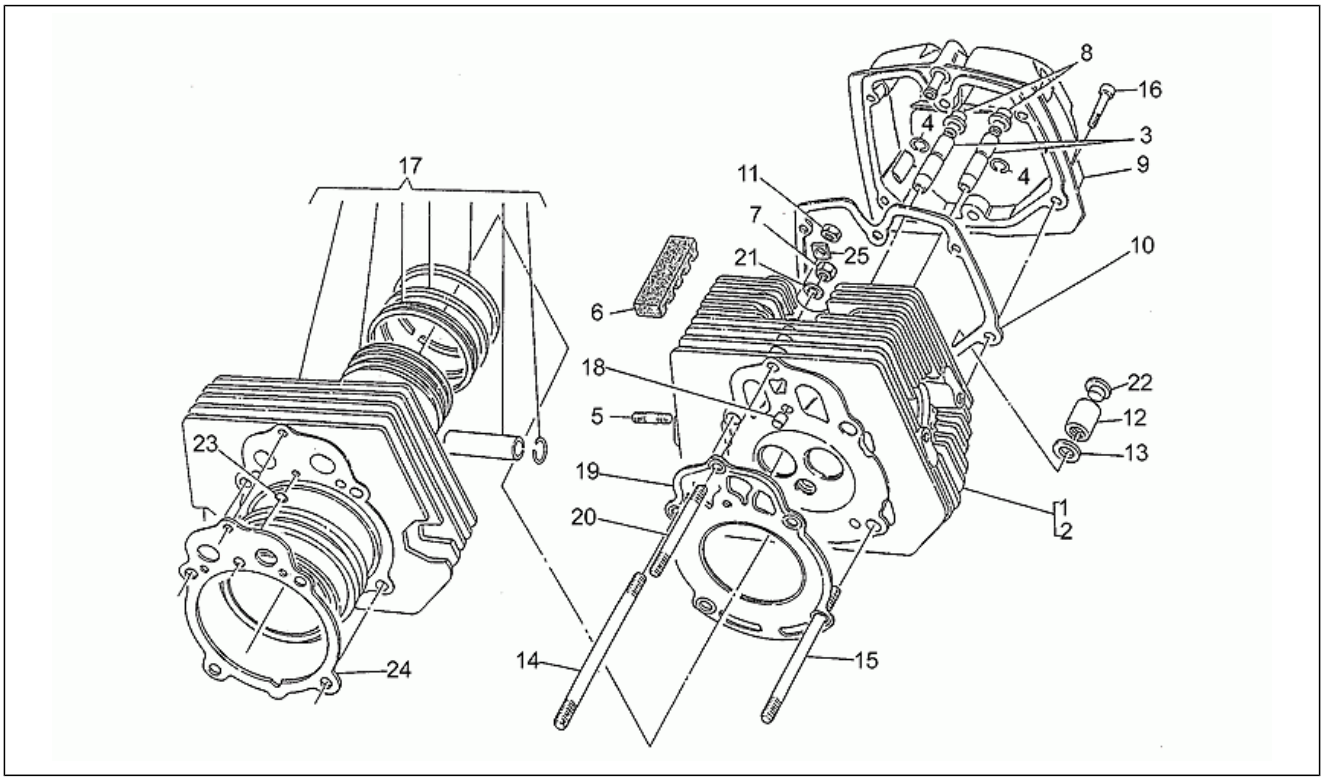

Pos.	Code	Description	Quant	Variants
20	GU96508107	Vis sans tête	2	
21	GU61270300	Rondelle élastique 8x15x0,3	2	
22	GU93180245	Bouchon	4	
23	GU61027200	Joint torique	2	
24	GU27020820	Joint	2	
25	GU19032980	Cale	4	

Tables

Table	Description
01	BATTERIE
02	COFFRE
03	SIDE CASES
04	SACOCHES CUIR
05	BÉQUILLE
06	TRANSMISSION CPL.
07	TABLEAU DE BORD
08	PHARE AVANT-KLAXON
09	FEU ARRIÈRE
10	FILTRE AIR
11	FOURCHE ARRIERE
12	CIRCUIT ELECTRIQUE
13	GUIDON - COMMANDES
14	PARE-BRISE
15	GARDE-BOUE AV./ARRIÈRE
16	REPOSE-PIEDS
17	PINCE FREIN
18	MAÎT. CYL. FREIN AV
19	POMPE FREIN ARRIÈRE
20	PORTE-BAGAGES
21	PORTE-PLAQUE
22	ROUE AV.
23	ROUE ARRIÈRE
24	CARROSSERIE CENTRALE - SELLE
25	RESERVOIR CARBURANT
26	SUSPENSION AVANT
27	SUSPENSION AVANT/ARRIERE
28	CHASSIS
29	ALLUMAGE
30	ARBRE MOTEUR
31	ALIMENTATION
32	BOÎTE DE VITESSES
33	CARBURATEUR
34	CARTER
35	DÉMARREUR
36	DISTRIBUTION
37	EMBRAYAGE
38	GROUPE ECHAPPEMENT
39	DÉMARREUR
40	LEVIER BOITE DE VITESSES
41	POMPE HUILE
42	CARTER DE BOÎTE VITESSES
43	TÊTE CYLINDRE



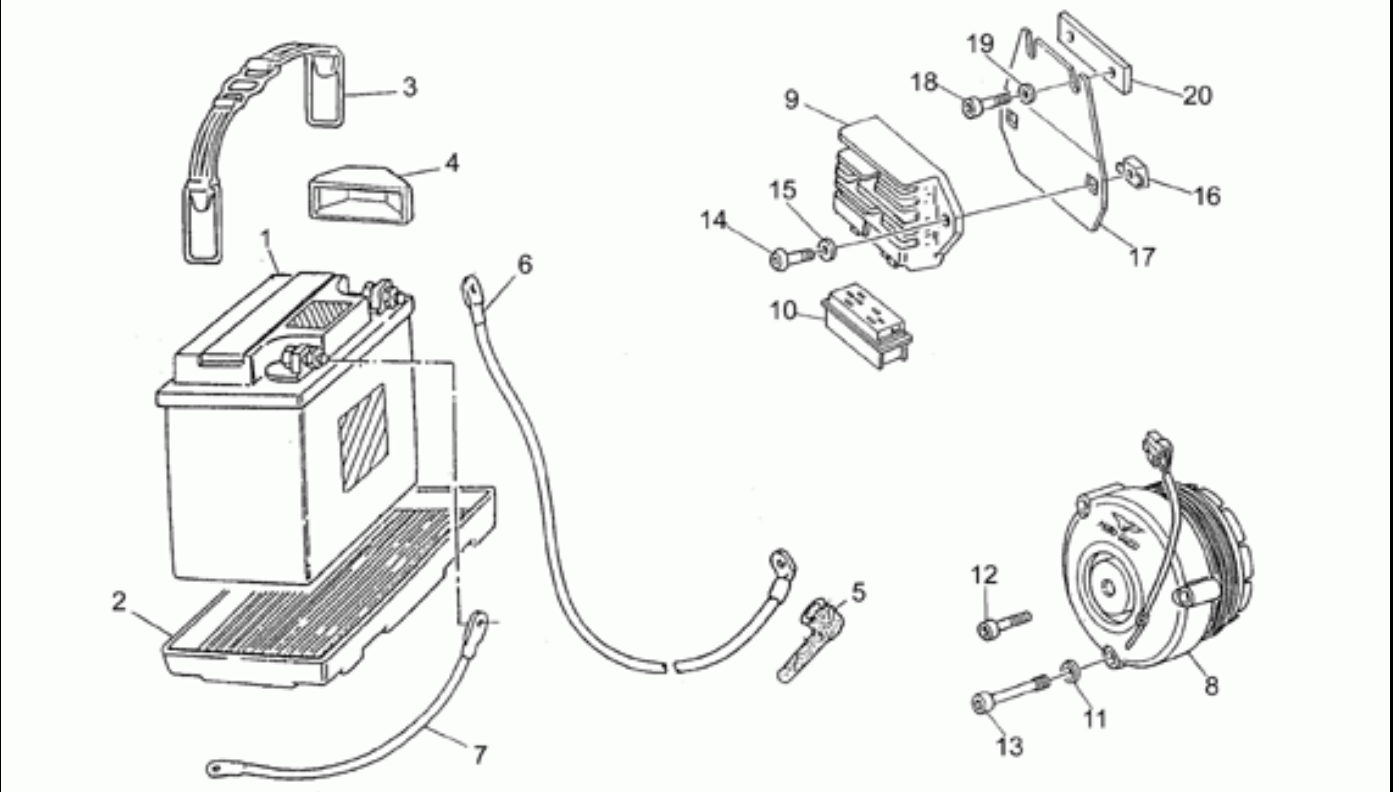

Ref.	Description	Year	I.M.	Country	Version	Code	Qty
1	Batterie 12V-24Ah	-	-	-	-	28704552	1
2	Boîtier batterie	-	-	-	-	28707050	1
3	Bride	-	-	-	-	19704800	1
4	Cône fixation accumulateur	-	-	-	-	31705360	1
5	Capuchon	-	-	-	-	19707100	2
6	Cablage	-	-	-	-	19748000	1
7	Câblage masse-batterie	-	-	-	-	19748400	1
8	Alternateur SAPRISA	-	-	-	-	28712400	1
9	Régulateur de tension SAPRISA	-	-	-	-	28703800	1
10	Connecteur SAPRISA	-	-	-	-	28712500	1
11	Rondelle évent.	-	-	-	-	95021105	3
12	Vis	-	-	-	-	98620250	1
13	Vis	-	-	-	-	28712459	3
14	Vis M6X16	-	-	-	-	98622316	2
15	Rondelle spéciale	-	-	-	-	61013800	2
16	Ecrou en cage	-	-	-	-	92660601	2
17	Plaque support	-	-	-	-	29704060	1
18	Vis	-	-	-	-	98622416	2
19	Rondelle	-	-	-	-	95000208	2
20	Plaquette	-	-	-	-	17451750	1

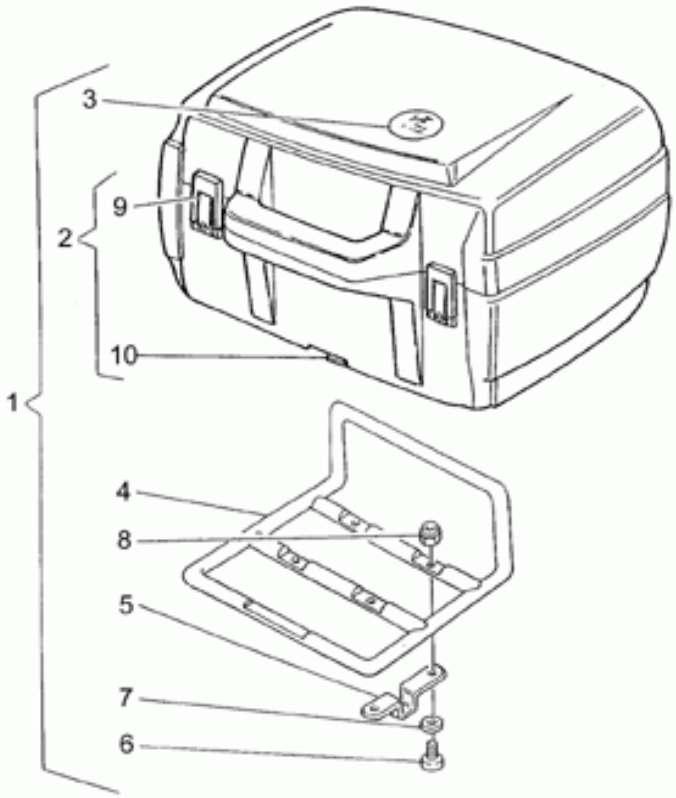

Ref.	Description	Year	I.M.	Country	Version	Code	Qty
1	Kit coffre rigide	-	-	-	-	31487565	1
2	Coffre 40 L	-	-	-	-	31487665	1
3	Déc."MotoGuzzi" 40 L	-	-	-	-	03482001	1
4	Support	-	-	-	-	31487795	1
5	Bride droite	-	-	-	-	31487865	1
	Bride gauche	-	-	-	-	31487866	1
6	Vis M6X20	-	-	-	-	98230621	4
7	Rondelle	-	-	-	-	95000206	4
8	Ecrou M6x1	-	-	-	-	92630106	4
9	Serrure	-	-	-	-	03484001	2
10	Serrure	-	-	-	-	03484000	1

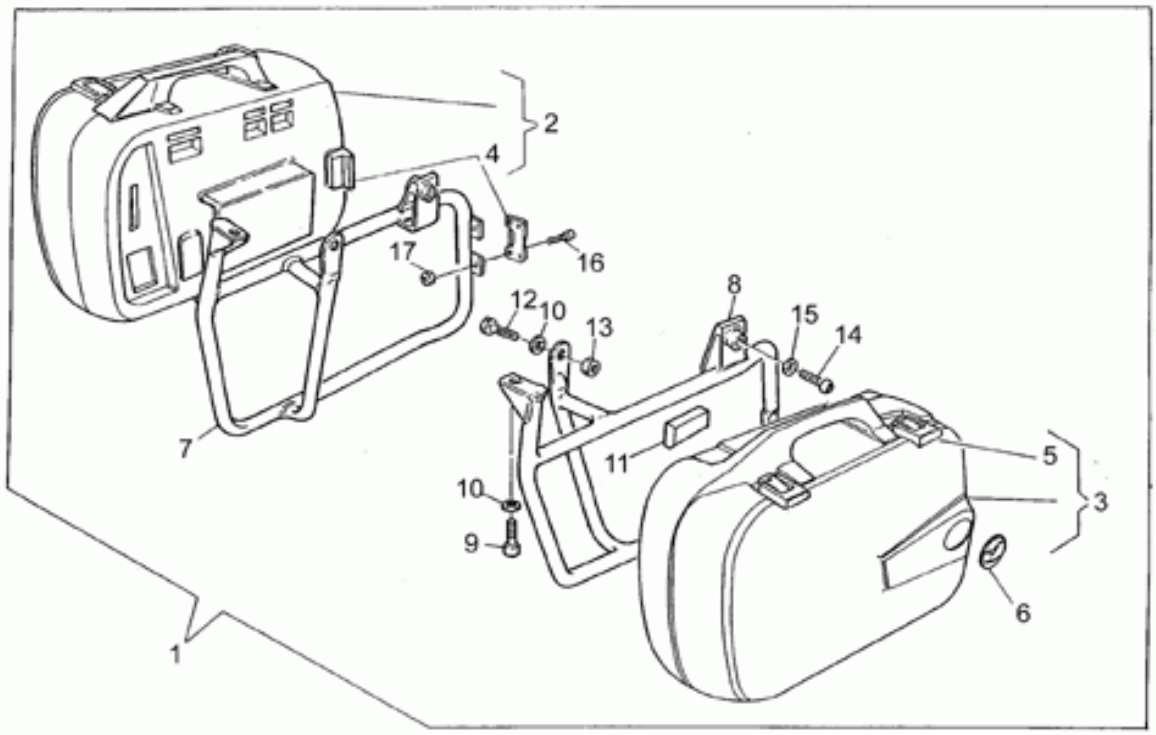

Ref.	Description	Year	I.M.	Country	Version	Code	Qty
1	Side cases 30 l	-	-	-	-	31480066	1
2	RH suitcase 30 L	-	-	-	-	31482565	1
3	LH suitcase 30 L	-	-	-	-	31485765	1
4	Serrure	-	-	-	-	03484000	2
5	Serrure	-	-	-	-	03484001	4
6	Déc."MotoGuzzi" 45 L	-	-	-	-	03482000	2
7	Support droite	-	-	-	-	31485066	1
8	Support gauche	-	-	-	-	31486566	1
9	Vis	-	-	-	-	98622420	2
10	Rondelle	-	-	-	-	95000208	4
11	Caoutchouc	-	-	-	-	31488165	2
12	Vis M8X22	-	-	-	-	98054422	2
13	Ecrou	-	-	-	-	92602208	2
14	Vis	-	-	-	-	98231045	2
15	Rondelle	-	-	-	-	95000210	2
16	Vis	-	-	-	-	98230618	4
17	Ecrou M6x1	-	-	-	-	92630106	4

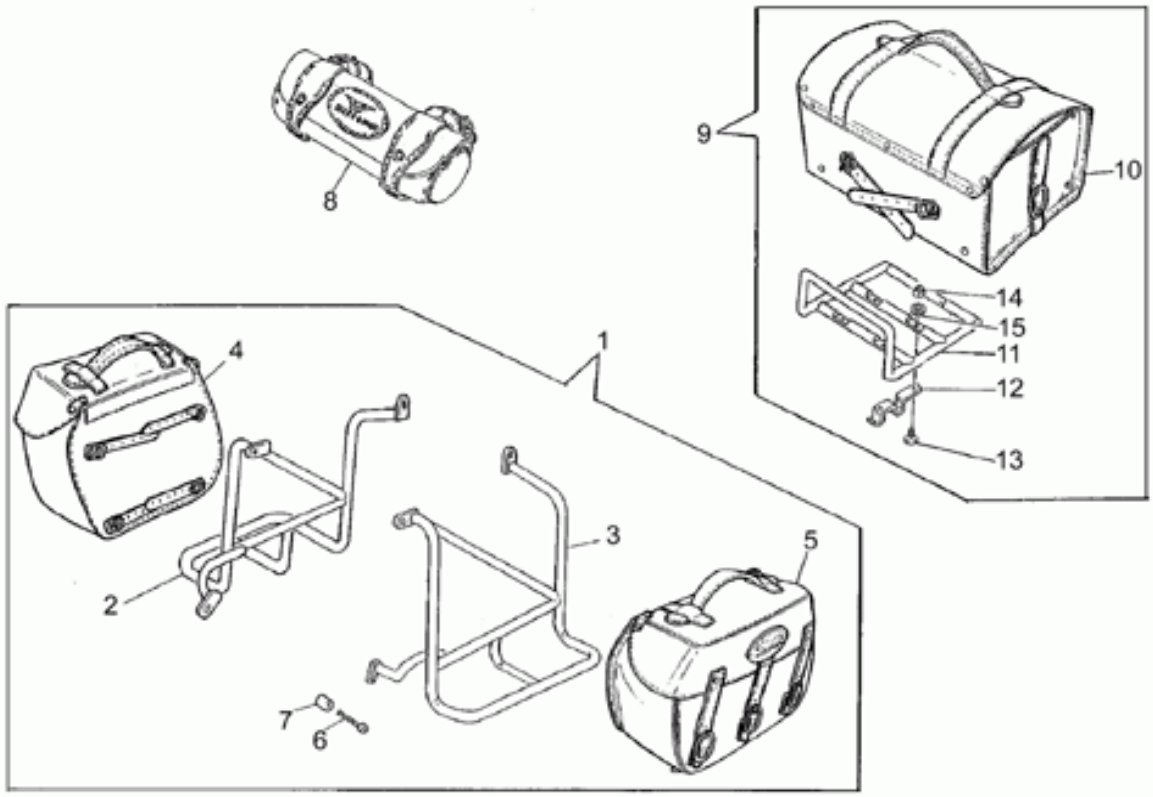

Ref.	Description	Year	I.M.	Country	Version	Code	Qty
1	Sacoches cuir	-	-	-	-	31480080	1
2	Support droite	-	-	-	-	31486680	1
3	Support gauche	-	-	-	-	31486780	1
4	RH suitcase	-	-	-	-	03482536	1
5	LH suitcase	-	-	-	-	03485736	1
6	Vis	-	-	-	-	98622430	2
7	Entretoise	-	-	-	-	91180810	2
8	Trousse à outils	-	-	-	-	29479555	1
9	Kit coffre en cuir	-	-	-	-	31487580	1
10	Coffre	-	-	-	-	03487636	1
11	Support	-	-	-	-	31487795	1
12	Bride droite	-	-	-	-	31487865	1
	Bride gauche	-	-	-	-	31487866	1
13	Vis M6X20	-	-	-	-	98230621	4
14	Ecrou M6x1	-	-	-	-	92630106	4
15	Rondelle	-	-	-	-	95000206	4

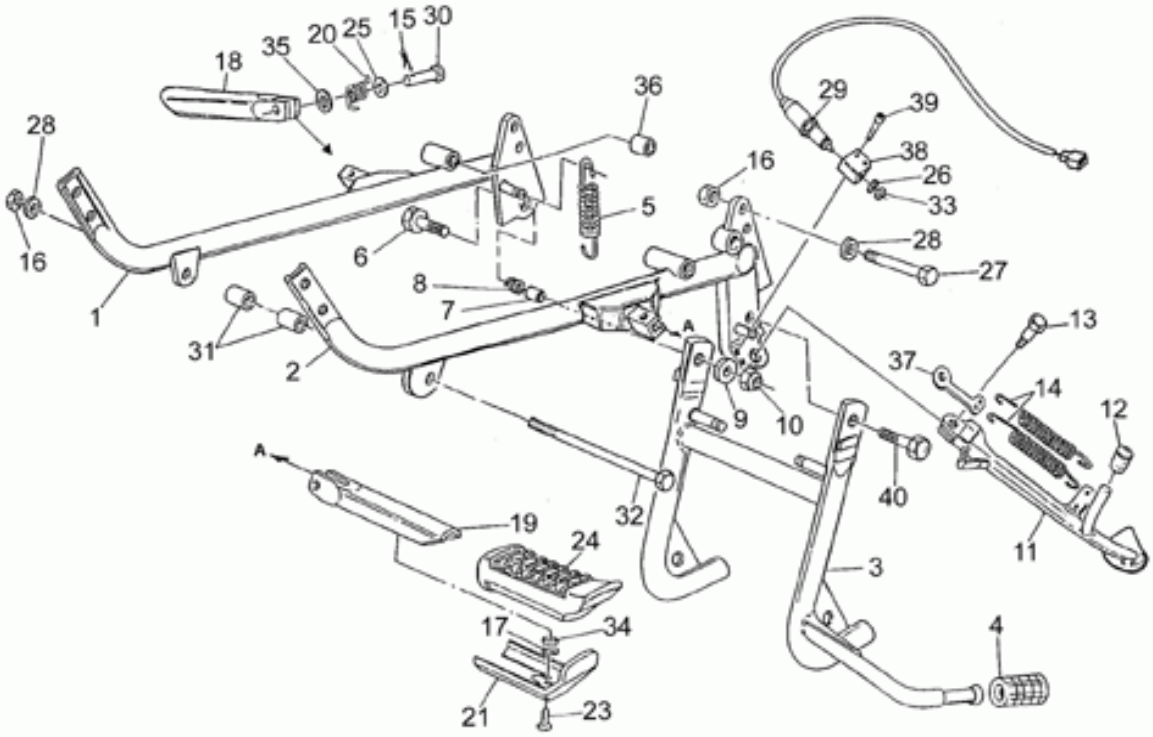

Ref.	Description	Year	I.M.	Country	Version	Code	Qty
1	Bras d.noir brillant	-	-	-	-	31420383	1
2	Bras g.noir brillant	-	-	-	-	31422183	1
3	Béquille cent.noir brillant	-	-	-	-	31430381	1
4	Pédale en caoutch.	-	-	-	-	13432640	1
5	Ressort rappel béq.	-	-	-	-	12434001	2
6	Vis	-	-	-	-	98054530	1
7	Entretoise	-	-	-	-	91181114	2
8	Ressort	-	-	-	-	94322215	2
9	Rondelle	-	-	-	-	95000210	3
10	Ecrou M10x1,5	-	-	-	-	92630510	2
11	Béquille latérale	-	-	-	-	31432181	1
12	Caoutchouc	-	-	-	-	14423800	1
13	Pivot	-	-	-	-	99105129	1
14	Ressort	-	-	-	-	17434060	2
15	Goupille	-	-	-	-	95401215	2
16	Ecrou	-	-	-	-	92602210	3
17	Vis M6X22	-	-	-	-	98054322	1
18	Tuyau rep.-pieds av.d.	-	-	-	-	23440710	1
19	Tuyau rep.-pieds av.g.	-	-	-	-	23441810	1
20	Ressort	-	-	-	-	23441110	2
21	Plaque	-	-	-	-	23441210	2
23	Vis	-	-	-	-	98054314	2
24	Pédale en caoutch.	-	-	-	-	23443210	2
25	Rondelle	-	-	-	-	95000208	2
26	Rondelle élastique	-	-	-	-	61270300	1
27	Vis	-	-	-	-	98052565	2
28	Rondelle 10,2x18x2	-	-	-	-	95004210	3
29	Interrupteur embrayage	-	-	-	-	29759150	1
30	Pivot	-	-	-	-	23442210	2
31	Bague	-	-	-	-	19017000	2
32	Pivot M10x250	-	-	-	-	53429500	1
33	Ecrou M8X1	-	-	-	-	92602508	1
34	Entretoise	-	-	-	-	91180602	2
35	Rondelle élastique	-	-	-	-	95129130	2
36	Douille 18 mm est.	-	-	-	-	28252060	4
37	Plaquette	-	-	-	-	28432760	1
38	Plaquette	-	-	-	-	31759360	1
39	Vis	-	-	-	-	98612110	2
40	Vis	-	-	-	-	98052535	1

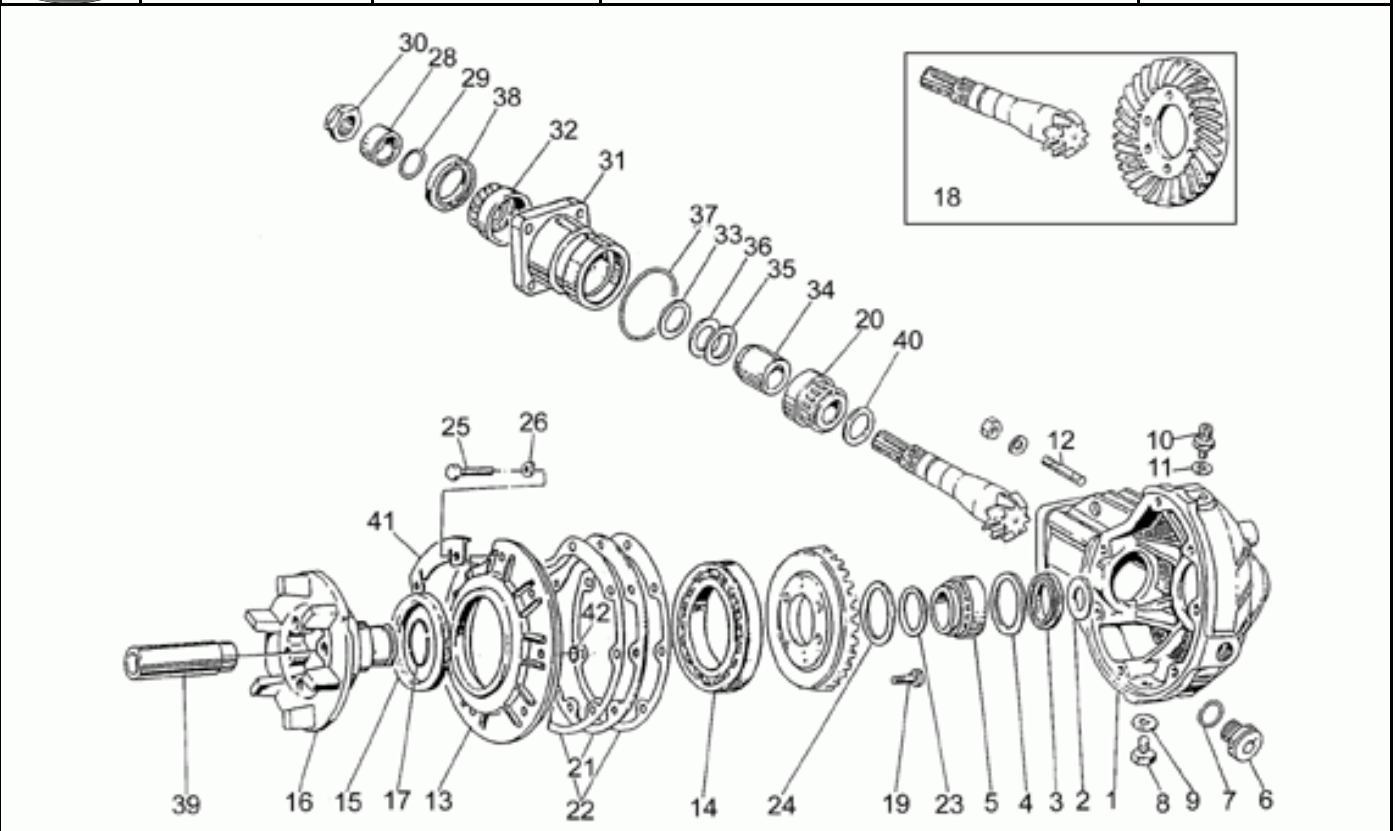

Ref.	Description	Year	I.M.	Country	Version	Code	Qty
1	Couvercle transmission gris	-	-	-	-	31350380	1
2	Rondelle d'appui	-	-	-	-	19351900	1
3	Bague d'étanchéité	-	-	-	-	90403547	1
4	Rondelle d'appui	-	-	-	-	19351100	1
5	Roulement à rouleaux 35x50x17	-	-	-	-	92252235	1
6	Bouchon huile	-	-	-	-	19351200	1
7	Joint torique 20,24x2,62	-	-	-	-	90706203	1
8	Bouchon vid.huile	-	-	-	-	31003766	1
9	Garniture	-	-	-	-	10528900	1
10	Bouchon purge	-	-	-	-	19206501	1
11	Garniture	-	-	-	-	10528900	1
12	Vis sans tête	-	-	-	-	96508055	4
13	Couvercle	-	-	-	-	27350410	1
14	Roulement à billes 70x110x13	-	-	-	-	92201070	1
15	Bague d'étanchéité 75x90x8	-	-	-	-	90407590	1
16	Pivot	-	-	-	-	19351401	1
17	Bague de butée	-	-	-	-	90353030	1
18	Couple conique Z8/31	-	-	-	-	19354621	1
19	Vis	-	-	-	-	19356320	6
20	Roulement roul.con.	-	-	-	-	92249223	1
21	Cale 0,8 mm	-	-	-	-	19355400	1
	Cale 0,9 mm	-	-	-	-	19355402	1
	Cale 1 mm	-	-	-	-	19355404	1
	Cale 1,1 mm	-	-	-	-	19355406	1
	Cale 1,2 mm	-	-	-	-	19355408	1
	Cale 1,3 mm	-	-	-	-	19355410	1
	Cale 1,4 mm	-	-	-	-	19355411	1
	Cale 1,5 mm	-	-	-	-	19355412	1
	Cale 1,6 mm	-	-	-	-	19355413	1
22	Joint	-	-	-	-	19350700	2
23	Rondelle éventail	-	-	-	-	19352300	1
24	Rondelle éventail	-	-	-	-	19353500	1
25	Vis	-	-	-	-	19357660	7
26	Rondelle élastique	-	-	-	-	61270300	7
28	Entretoise	-	-	-	-	19356801	1
29	Bague d'étanchéité 18,77X1,78	-	-	-	-	90706188	1
30	Ecrou	-	-	-	-	19356700	1
31	Habillage roulement	-	-	-	-	19352401	1
32	Roulement à rouleaux 20x47x14	-	-	-	-	92249220	1
33	Cale 1 mm	-	-	-	-	19355300	2
	Cale 1,1 mm	-	-	-	-	19355301	2
	Cale 1,2 mm	-	-	-	-	19355302	2

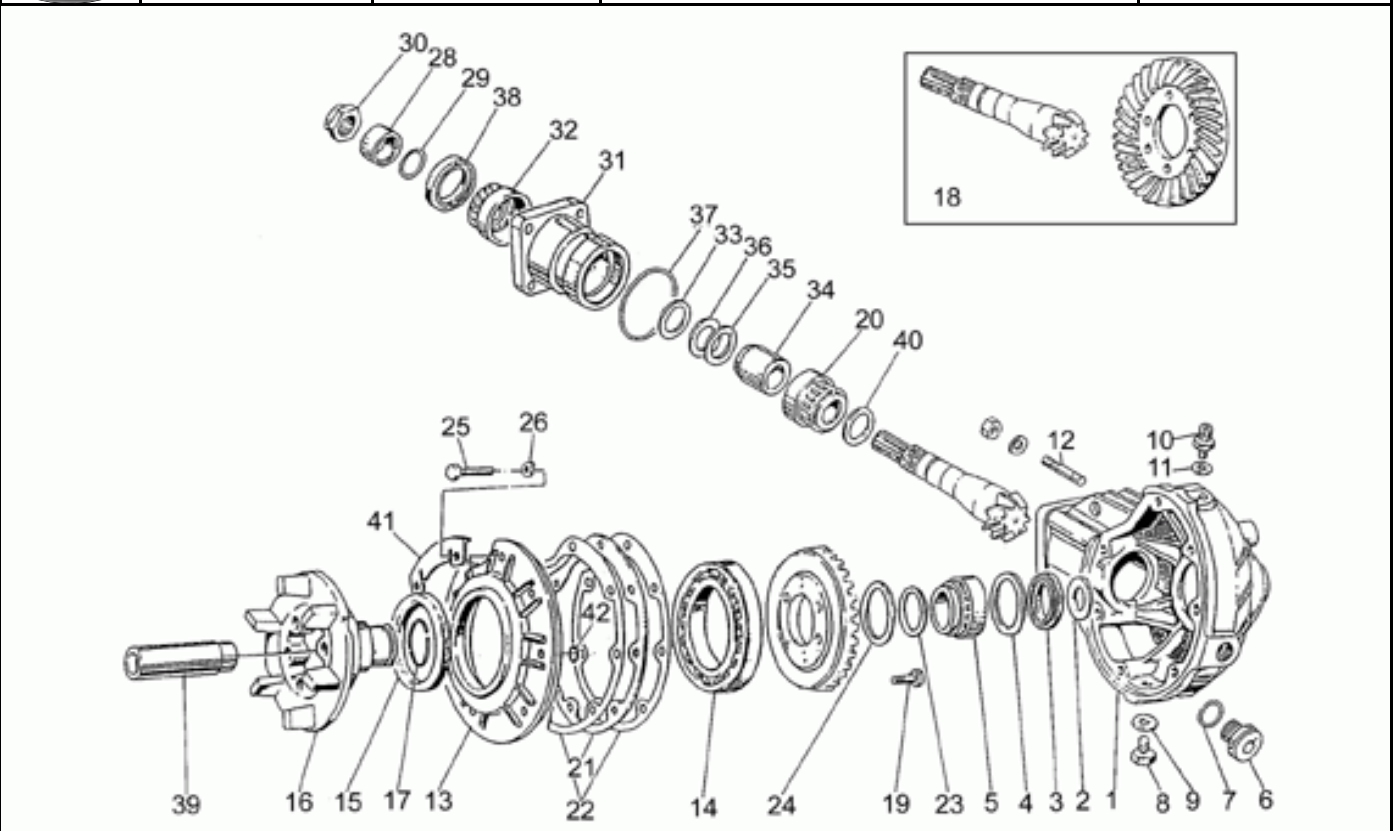

Ref.	Description	Year	I.M.	Country	Version	Code	Qty
33	Cale 1,3 mm	-	-	-	-	19355303	2
	Cale 1,4 mm	-	-	-	-	19355304	2
	Cale 1,5 mm	-	-	-	-	19355305	2
	Cale 1,6 mm	-	-	-	-	19355306	2
	Cale 1,7 mm	-	-	-	-	19355307	2
	Cale 1,8 mm	-	-	-	-	19355308	2
	Cale 1,9 mm	-	-	-	-	19355309	2
34	Entretoise	-	-	-	-	19355121	1
35	Rondelle ajustem. 0,1 mm	-	-	-	-	19355200	1
36	Rondelle ajustem. 0,15 mm	-	-	-	-	19355202	1
37	Bague d'étanchéité	-	-	-	-	90706552	1
38	Bague d'étanchéité	-	-	-	-	90403247	1
39	Entretoise	-	-	-	-	27634110	1
40	Cale 1 mm	-	-	-	-	19355320	1
	Cale 1,1 mm	-	-	-	-	19355321	1
	Cale 1,2 mm	-	-	-	-	19355322	1
	Cale 1,3 mm	-	-	-	-	19355323	1
	Cale 1,4 mm	-	-	-	-	19355324	1
	Cale 1,5 mm	-	-	-	-	19355325	1
	Cale 1,6 mm	-	-	-	-	19355326	1
	Cale 1,7 mm	-	-	-	-	19355327	1
	Cale 1,8 mm	-	-	-	-	19355328	1
	Cale 1,9 mm	-	-	-	-	19355329	1
41	Plaquette	-	-	-	-	27357411	1
42	Joint torique	-	-	-	-	90706076	2

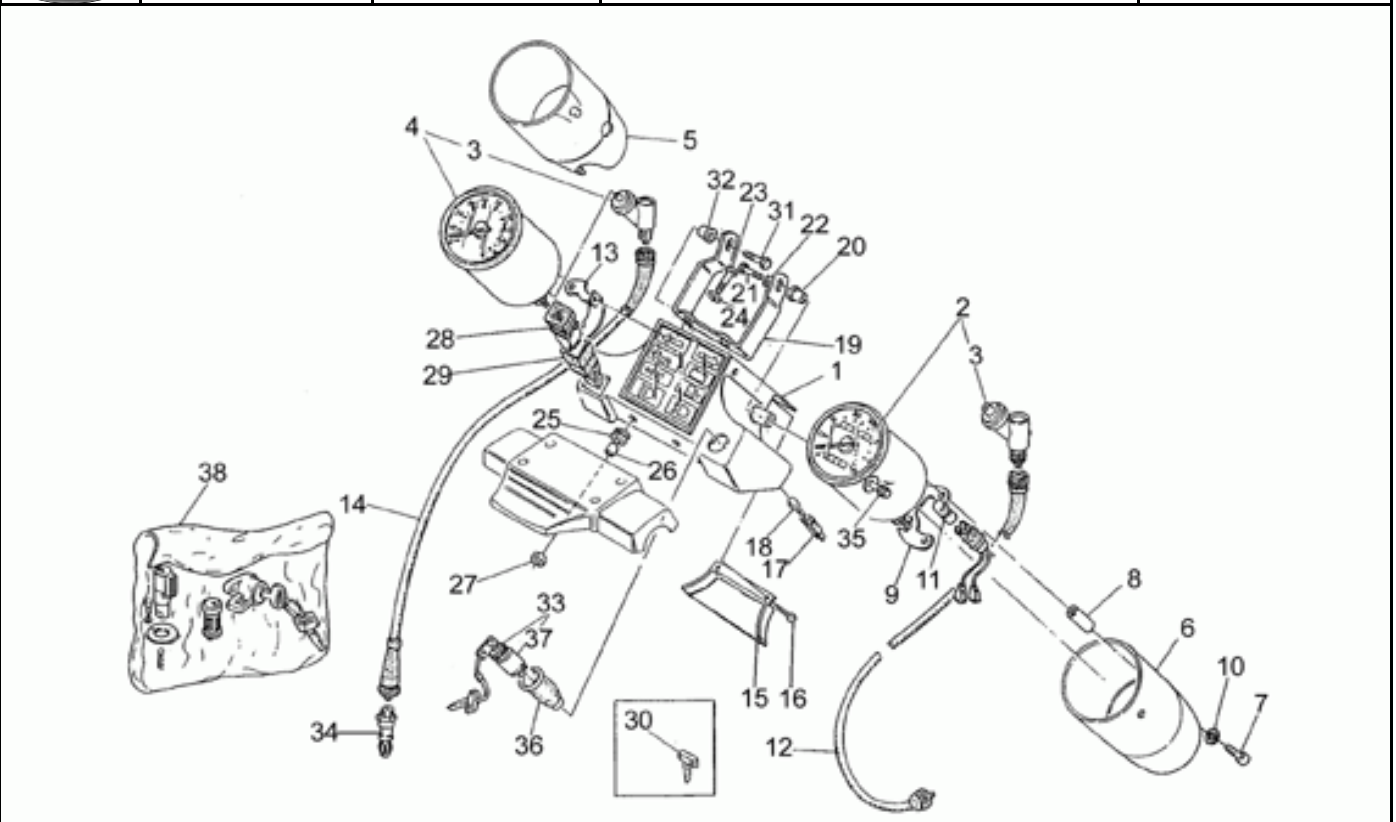

Ref.	Description	Year	I.M.	Country	Version	Code	Qty
1	Boîtier tableau de bord cpl.	-	-	-	-	23760010	1
2	Compteur kilométrique	-	-	UK	-	23762470	1
	Compteur kilométrique	-	-	-	-	31761560	1
3	Renvoi 60j	-	-	-	-	23768310	2
4	Compte-tours	-	-	UK	-	23767270	1
	Compte-tours	-	-	-	-	31767260	1
5	Boîtier compte-tours	-	-	-	-	23761910	1
6	Boîtier tachymètre	-	-	-	-	23762010	1
7	Vis	-	-	-	-	98622214	2
8	Entretoise	-	-	-	-	23765110	2
9	Plaque	-	-	-	-	23764910	1
10	Rondelle	-	-	-	-	95020105	2
11	Lampe (ou Ampoule) 12V 3W	-	-	-	-	17762150	2
12	Transmission tachymètre	-	-	-	-	27760410	1
13	Plaque	-	-	-	-	23766510	1
14	Transmission compte-tours	-	-	-	-	23768110	1
15	Couvercle inférieure	-	-	-	-	29765250	1
16	Vis taraud	-	-	-	-	99210210	2
17	Porte-ampoule	-	-	-	-	19768680	8
18	Lampe (ou Ampoule) 12V-1,2W	-	-	-	-	93450140	8
19	Cavalier	-	-	-	-	31764165	1
20	Entretoise	-	-	-	-	23766911	1
21	Vis	-	-	-	-	98054230	1
22	Rondelle	-	-	-	-	95004205	2
23	Vis	-	-	-	-	98054325	2
24	Rondelle 6,15x11x0,8	-	-	-	-	95004206	2
25	Caoutchouc	-	-	-	-	91551167	2
26	Entretoise	-	-	-	-	91180617	2
27	Ecrou M6x1	-	-	-	-	92630106	2
28	Turn indicator switch	-	-	-	-	28745761	1
29	Protection caoutch.	-	-	-	-	35755780	1
30	Clé non fraisée	-	-	-	-	31735560	1
31	Vis	-	-	-	-	98054230	1
32	Entretoise	-	-	-	-	23766910	1
33	Bloc démarreur	-	-	-	-	31735360	1
34	Renvoi Z=14	-	-	-	-	14769200	1
35	Poussoir RAZ	-	-	-	-	19762810	1
36	Bague	-	-	-	-	19741336	1
37	Bloc démarreur	-	-	-	-	30735060	1
38	Kit serrure	-	-	-	-	31736881	1

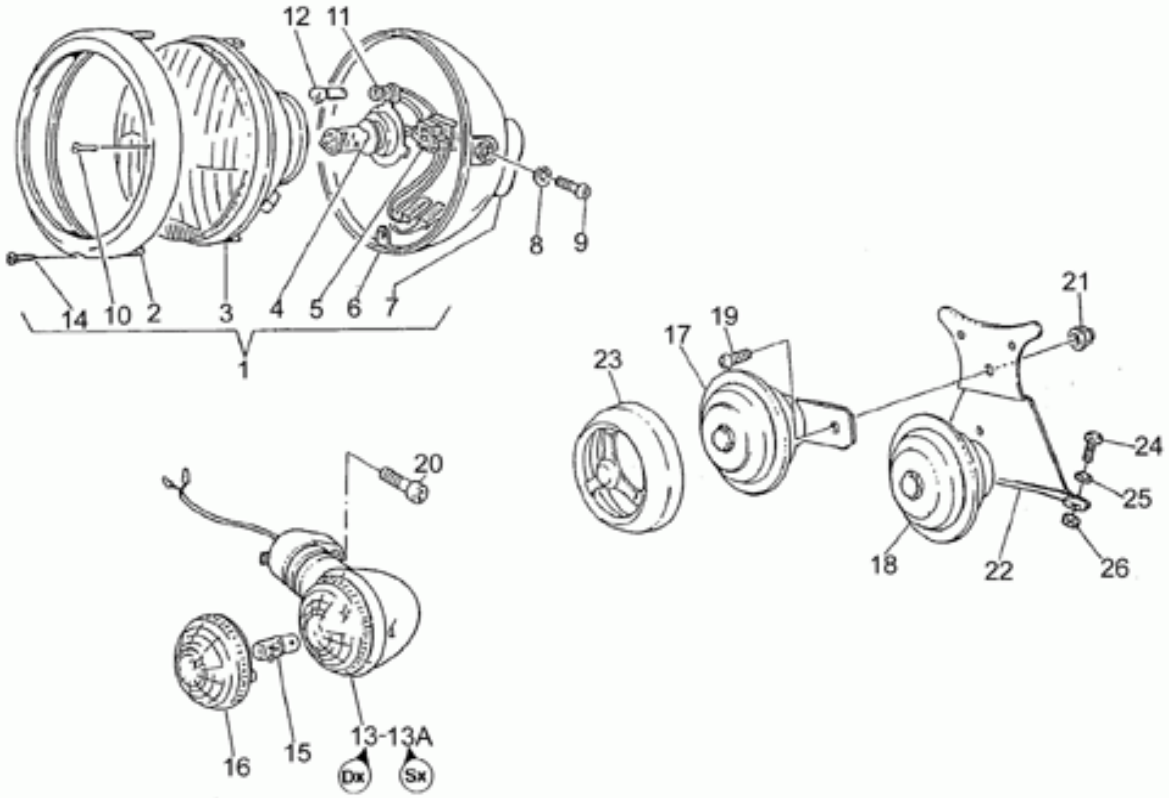

Ref.	Description	Year	I.M.	Country	Version	Code	Qty
1	Feu avant	-	-	-	-	28740533	1
	Phare avant	-	-	AUS-UK	-	31740520	1
2	Cadre phare	-	-	-	-	19740454	1
3	Groupe optique	-	-	-	-	18740435	1
	Groupe optique	-	-	AUS-UK	-	31740420	1
4	Lampe (ou Ampoule) 12V-55/60W	-	-	-	-	93450232	1
5	Porte-ampoule	-	-	-	-	14756255	1
6	Corps feu AV	-	-	-	-	23740418	1
7	Bouchon calotte AR	-	-	-	-	19740404	1
8	Rondelle 10,2x18x2	-	-	-	-	95004210	2
9	Vis	-	-	-	-	98231023	2
10	Vis embrayage	-	-	-	-	19740303	1
11	Porte-ampoule	-	-	-	-	17740405	1
12	Lampe (ou Ampoule) 12V-4W	-	-	-	-	93450119	1
13	Clignotant AV droite	-	-	-	-	31750665	1
	Clignotant avant gauche	-	-	-	-	31750666	1
14	Vis	-	-	-	-	19740302	1
15	Lampe (ou Ampoule) 12V-10W	-	-	-	-	93450127	2
16	Vitre clignotant	-	-	-	-	31753765	2
17	Klaxon H	-	-	-	-	31743765	1
18	Klaxon L	-	-	-	-	31743766	1
19	Vis	-	-	-	-	98230816	1
20	Vis	-	-	-	-	98612320	2
21	Ecrou	-	-	-	-	92660208	1
22	Plaq.sup. avert.son.	-	-	-	-	31744265	1
23	Masque pour klaxon	-	-	-	-	31744765	2
24	Vis	-	-	-	-	98230616	2
25	Rondelle	-	-	-	-	95000206	2
26	Ecrou M6x1	-	-	-	-	92630106	2

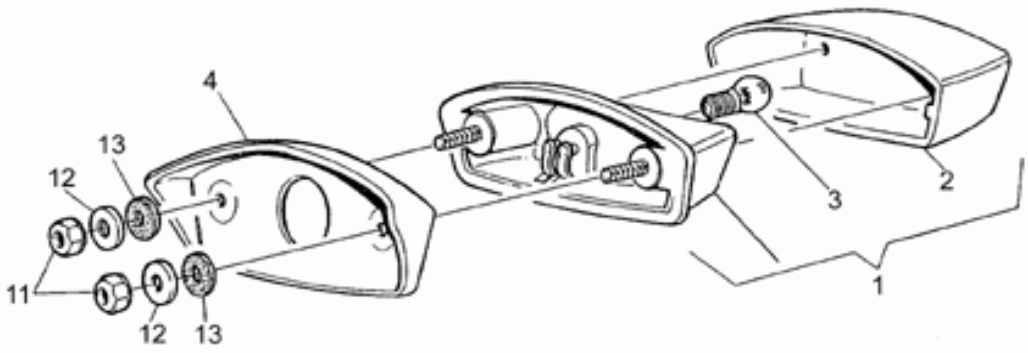

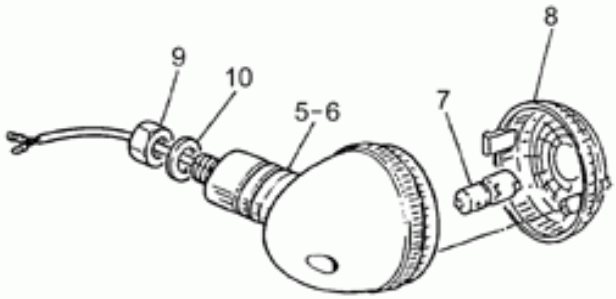

Ref.	Description	Year	I.M.	Country	Version	Code	Qty
1	Feu arrière	-	-	-	-	31740960	1
2	Glace phare AR	-	-	-	-	31741760	1
3	Lampe (ou Ampoule) 12V/5-21W	-	-	-	-	93450224	1
4	Entretoise	-	-	-	-	31741260	1
5	Clignotant arrière gauche	-	-	-	-	31751665	1
6	Clignotant arrière droite	-	-	-	-	31751666	1
7	Lampe (ou Ampoule) 12V-10W	-	-	-	-	93450127	2
8	Vitre clignotant	-	-	-	-	31753765	2
9	Ecrou	-	-	-	-	92602312	2
10	Rondelle évent.	-	-	-	-	95021112	2
11	Ecrou M6x1	-	-	-	-	92630106	2
12	Rondelle	-	-	-	-	95000206	2
13	Caoutchouc	-	-	-	-	93110060	2

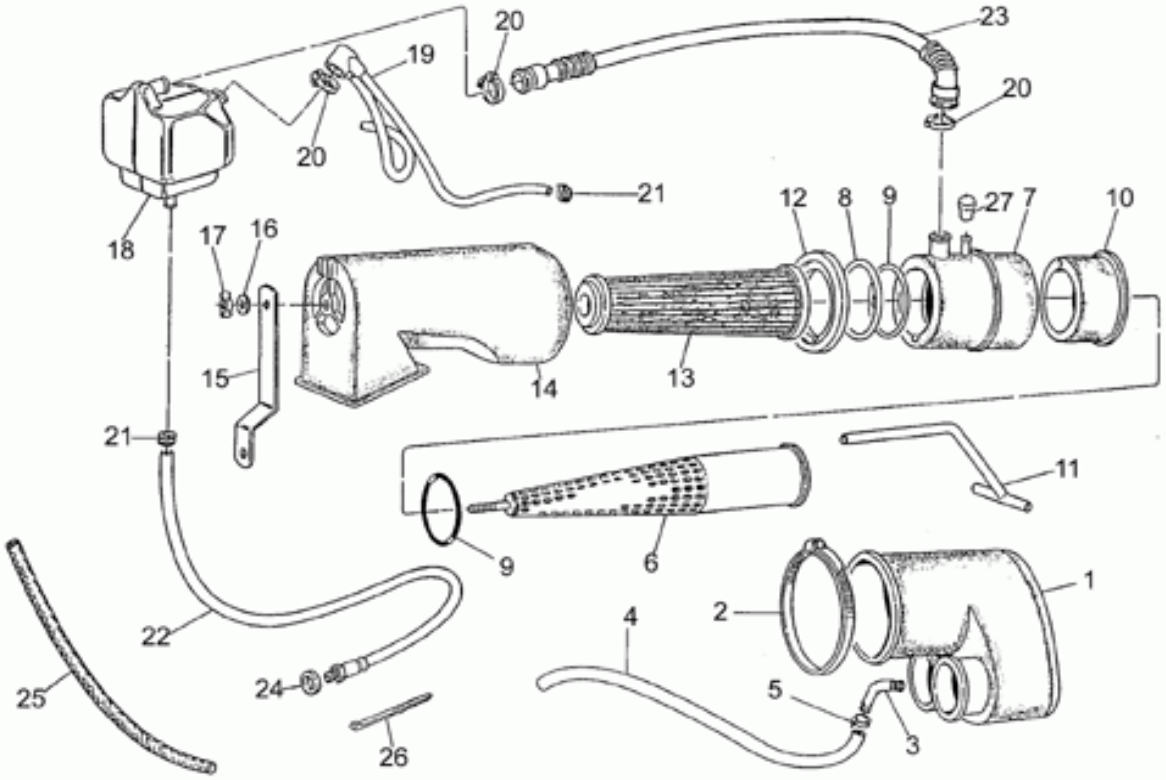

Ref.	Description	Year	I.M.	Country	Version	Code	Qty
1	Collecteur aspiration	-	-	-	-	19114300	1
2	Collier	-	-	-	-	93305092	1
3	Tuyau	-	-	-	-	17114650	1
4	Tuyau reniflard radiateur	-	-	-	-	008239440500	1
5	Collier	-	-	-	-	14609650	1
6	Support filtre	-	-	-	-	31155780	1
7	Tuyau d'aspiration	-	-	-	-	19156701	1
8	Joint	-	-	-	-	19113900	1
9	Bague d'étanchéité	-	-	-	-	90706552	2
10	Rallonge manchon aspiration	-	-	-	-	19156900	1
11	Tuyau reniflard radiateur	-	-	-	-	19156001	1
12	Douille guidage	-	-	-	-	17113450	1
13	Filtre air	-	-	-	-	17113651	1
14	Couvercle filtre	-	-	-	-	17114050	1
15	Plaque support	-	-	-	-	27114120	1
16	Rondelle 5,25x14x1,5	-	-	-	-	95100059	1
17	Ecrou	-	-	-	-	92670305	1
18	Corp	-	-	-	-	27153460	1
19	Reniflard	-	-	-	-	27159660	1
20	Collier	-	-	-	-	93305018	3
21	Collier	-	-	-	-	61108400	3
22	Reniflard	-	-	-	-	27159360	1
23	Tuyau	-	-	-	-	27157420	1
24	Joint	-	-	-	-	90714082	1
25	Gaine thermique	-	-	-	-	008239231400	1
26	Collier	-	-	-	-	61609630	1
27	Caoutchouc de ferm.	-	-	-	-	19433000	1

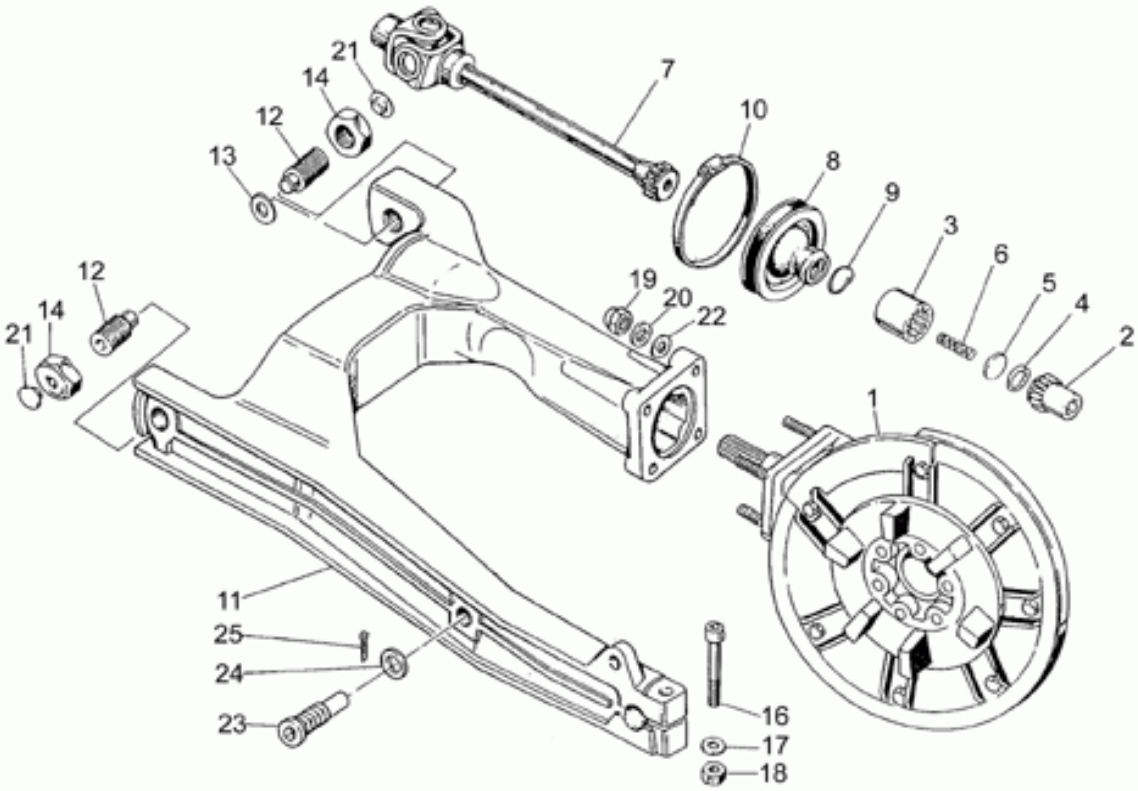

Ref.	Description	Year	I.M.	Country	Version	Code	Qty
1	Carter de transm.compl.gris	-	-	-	-	31350280	1
2	Manchon	-	-	-	-	19327701	1
3	Manchon	-	-	-	-	19328801	1
4	Bague seeger	-	-	-	-	90272023	1
5	Disque	-	-	-	-	19327601	1
6	Ressort	-	-	-	-	94321099	1
7	Joint	-	-	-	-	23328081	1
8	Collier de protection	-	-	-	-	23548080	1
9	Ressort	-	-	-	-	23548180	1
10	Collier	-	-	-	-	93305074	1
11	Fourche ar.gris	-	-	-	-	31540280	1
12	Pivot	-	-	-	-	19547000	2
13	Cale	-	-	-	-	35214300	1
14	Ecrou	-	-	-	-	14547800	2
16	Vis	-	-	-	-	98620545	1
17	Rondelle 10,2x18x2	-	-	-	-	95004210	1
18	Ecrou	-	-	-	-	92602210	1
19	Ecrou	-	-	-	-	92781081	4
20	Rondelle	-	-	-	-	14615901	4
21	Bouchon	-	-	-	-	93180105	2
22	Rondelle	-	-	-	-	95004208	4
23	Pivot	-	-	-	-	31544160	1
24	Rondelle	-	-	-	-	95100523	1
25	Goupille	-	-	-	-	95500222	1

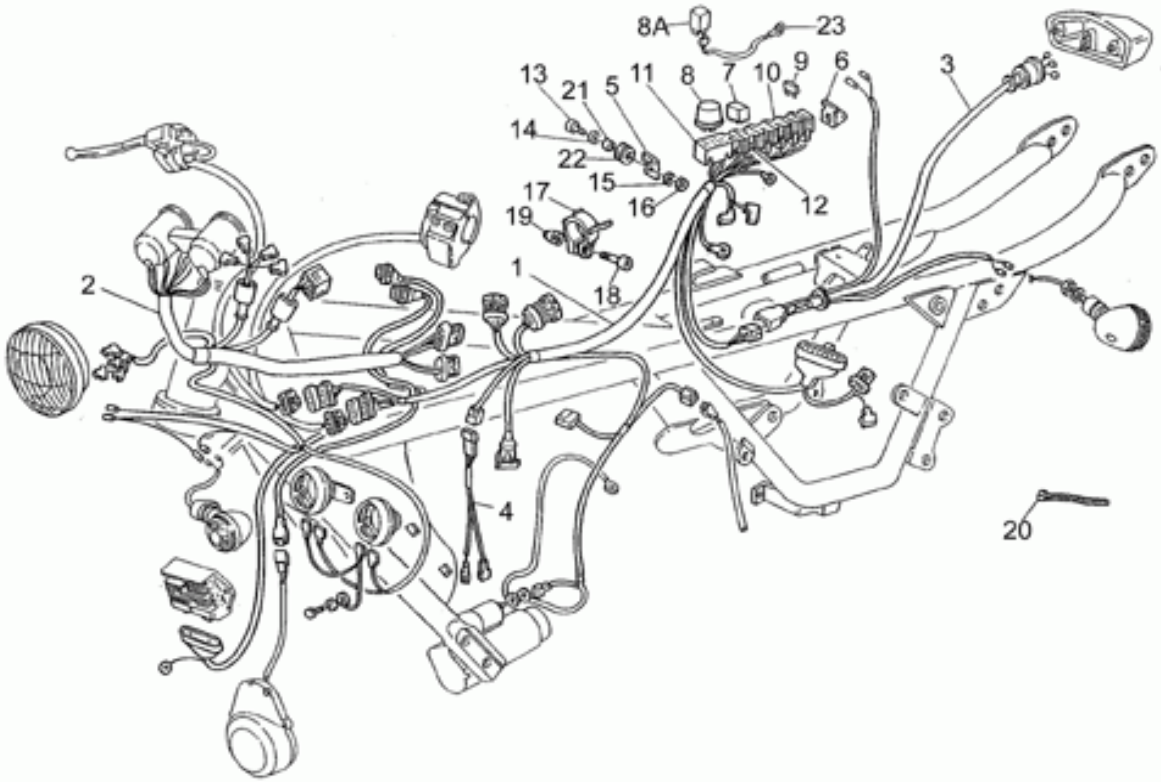

Ref.	Description	Year	I.M.	Country	Version	Code	Qty
1	Circuit electrique	-	-	-	-	31747181	1
2	Câblage tableau de bord	-	-	-	-	31747267	1
3	Câblage feu AR	-	-	-	-	31747365	1
4	Câble capteur point mort	-	-	-	-	31724540	1
5	Bride droite	-	-	-	-	30477101	1
6	Plaque g.	-	-	-	-	30477200	1
7	Relais Siemens A302/B1008	-	-	-	-	30732560	2
8	Clignotement	-	-	-	-	17750520	1
	Clignotement	-	-	AUS	-	31750560	1
9	Fusible 15A	-	-	-	-	28742560	44
10	Boîte à fusibles	-	-	-	-	30732200	1
11	Support	-	-	-	-	30756100	4
12	Support relais	-	-	-	-	30732400	2
13	Vis M6X18	-	-	-	-	98622318	2
14	Rondelle spéciale	-	-	-	-	61013800	2
15	Rondelle	-	-	-	-	95100120	2
16	Ecrou M6x1	-	-	-	-	92630206	1
17	Collier	-	-	-	-	31749765	1
18	Vis	-	-	-	-	61127520	1
19	Bague	-	-	-	-	61127220	1
20	Collier	-	-	-	-	14609650	2
21	Entretoise	-	-	-	-	91180607	2
22	Caoutchouc	-	-	-	-	91551085	2
23	Câblage masse-batterie	-	-	AUS	-	31755660	1

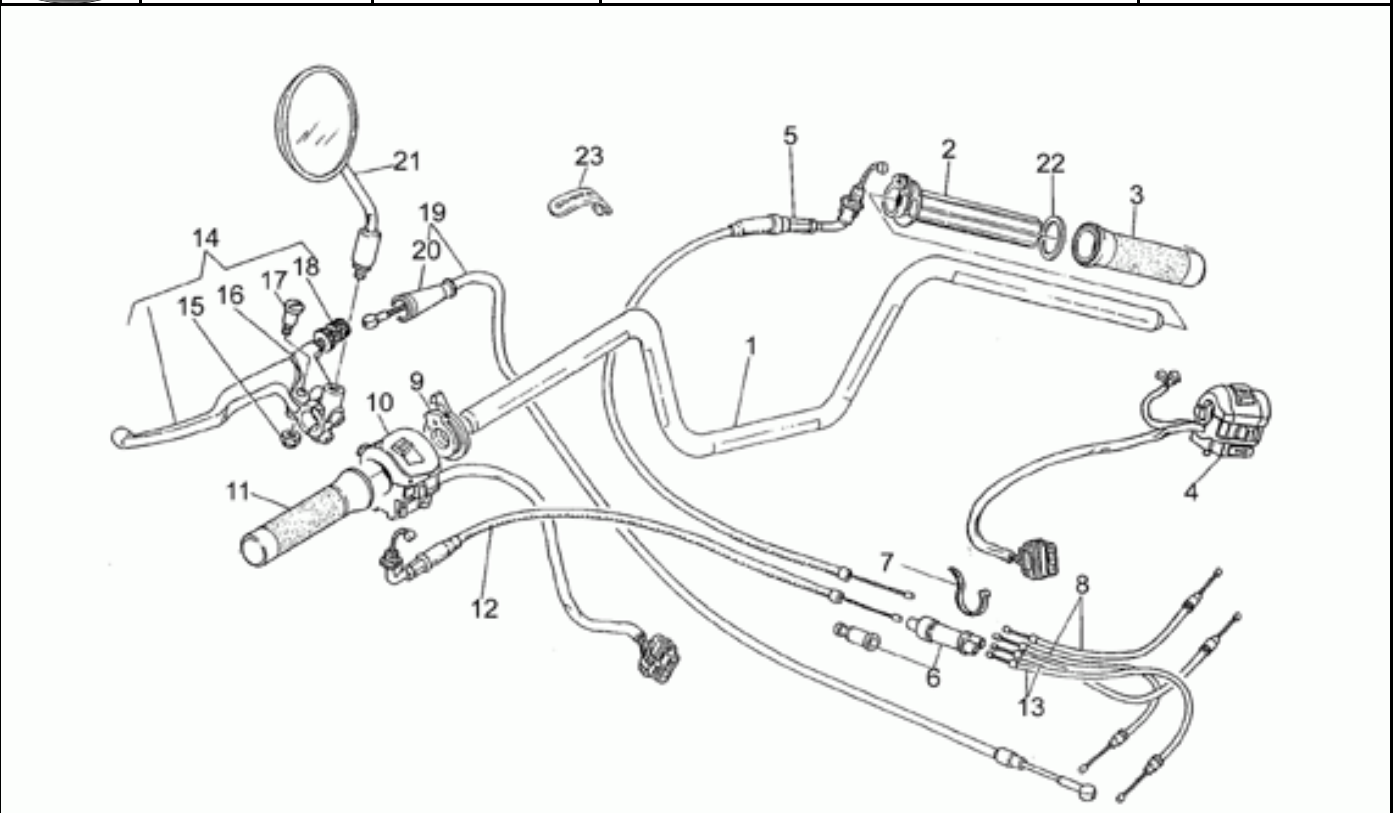

Ref.	Description	Year	I.M.	Country	Version	Code	Qty
1	Guidon	-	-	-	-	31600381	1
2	Tuyau gaz sans manette	-	-	-	-	30603800	1
3	Poignée dr.	-	-	-	-	31603565	1
4	Déviateur feux dte	-	-	-	-	30738860	1
5	Câble gaz	-	-	-	-	31117565	1
6	Dedoublereur	-	-	-	-	30607910	2
7	Collier	-	-	-	-	14609650	2
8	Câble gaz	-	-	-	-	27117775	2
9	Commande starter	-	-	-	-	30135200	1
10	Déviateur feux gche	-	-	-	-	30738060	1
11	Poignée gc.	-	-	-	-	31603065	1
12	Câble starter	-	-	-	-	31132865	1
13	Câble starter	-	-	-	-	27133515	2
14	Levier embrayage complet	-	-	-	-	30605560	1
15	Ecrou	-	-	-	-	92602206	1
16	Supp.du levier nude l'embray.	-	-	-	-	30601800	1
17	Goujon de levier	-	-	-	-	30530528	1
18	Réglage	-	-	-	-	30602500	1
19	Câble embrayage	-	-	-	-	31093065	1
20	Soufflet	-	-	-	-	23093870	1
21	Miroir rétroviseur	-	-	-	1A	31769465	2
	Miroir rétroviseur	-	-	-	2A	03769400	2
22	Rondelle nylon	-	-	-	-	30606900	1
23	Collier	-	-	-	-	03609600	1

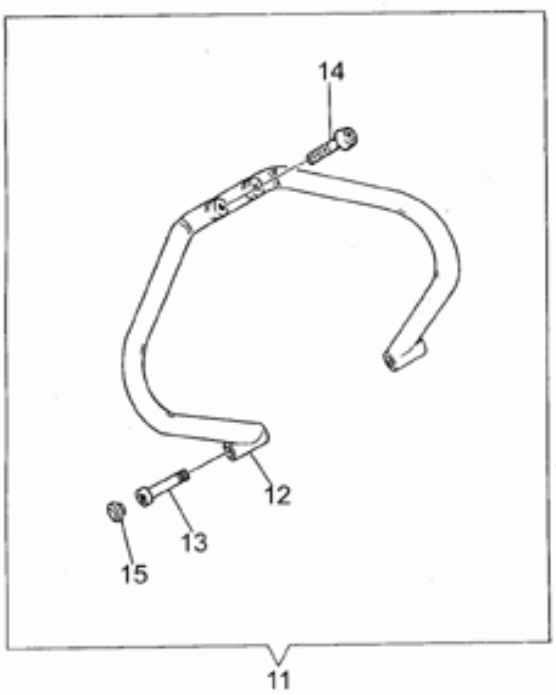

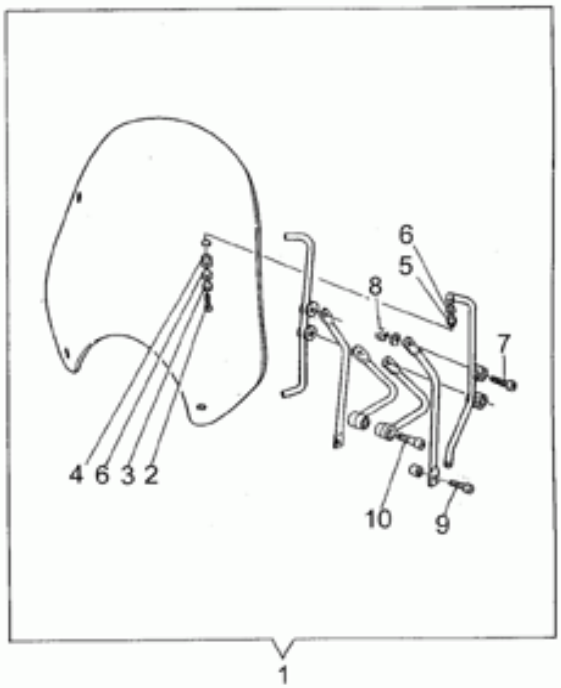

Ref.	Description	Year	I.M.	Country	Version	Code	Qty
1	Pare-brise cpl.	-	-	-	-	31575162	1
2	Vis	-	-	-	-	98270620	4
3	Rondelle	-	-	-	-	03530543	4
4	Silent block	-	-	-	-	03530546	4
5	Entretoise	-	-	-	-	03530545	4
6	Rondelle	-	-	-	-	03530544	8
7	Vis	-	-	-	-	98622420	2
8	Ecrou	-	-	-	-	92602208	4
9	Vis M8X45	-	-	-	-	98622445	2
10	Vis	-	-	-	-	98620545	2
11	Pare-chocs AV	-	-	-	-	31459866	1
12	Front protection	-	-	-	-	31450266	1
13	Vis M10X40	-	-	-	-	98620540	2
14	Vis	-	-	-	-	98622420	2
15	Caoutchouc	-	-	-	-	93180216	2

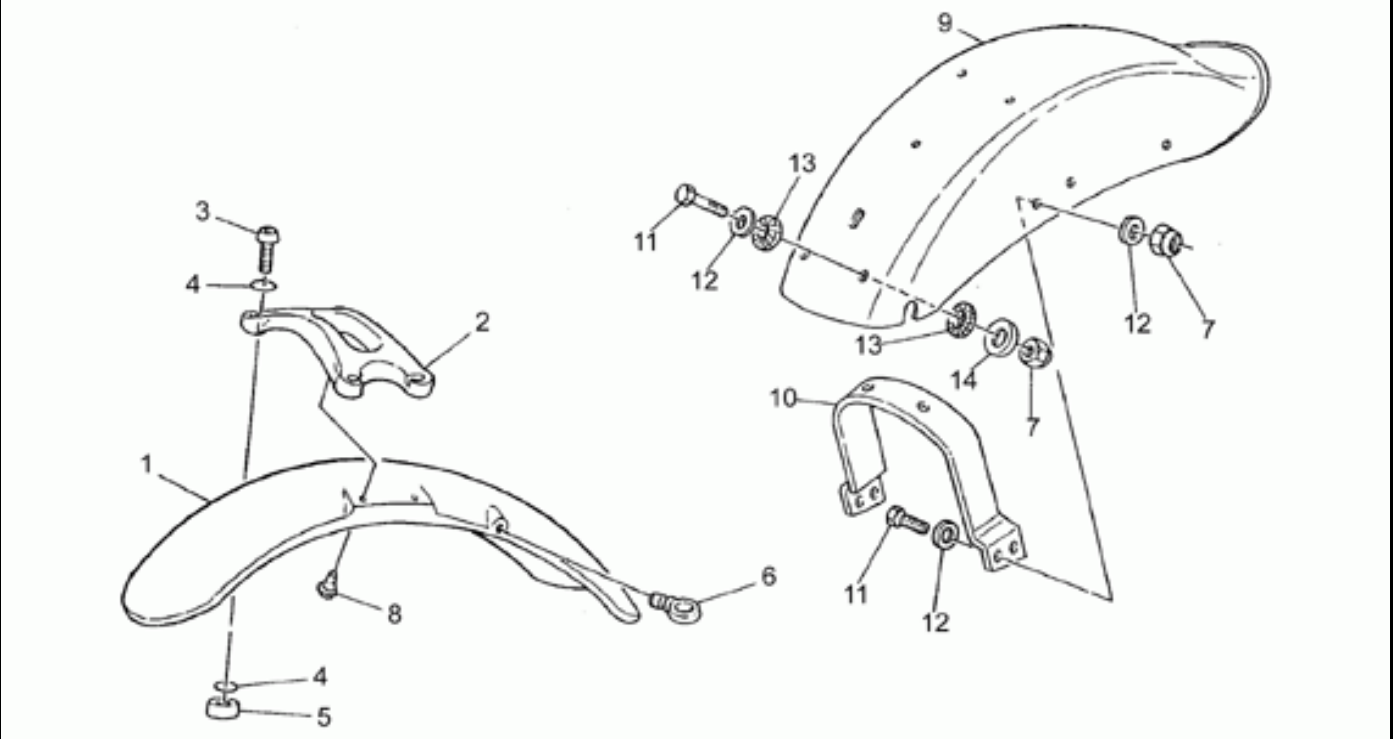

Ref.	Description	Year	I.M.	Country	Version	Code	Qty
1	Garde-b AV.noir	-	-	-	-	89000213	1
	Garde-boue av.blanc	-	-	-	-	314344651	1
2	Plaque de stabilisation	-	-	-	-	31436665	1
3	Vis	-	-	-	-	98230826	4
4	Joint torique	-	-	-	-	90706092	8
5	Entretoise	-	-	-	-	91180829	4
6	Oeillet	-	-	-	-	28659740	2
7	Ecrou M6x1	-	-	-	-	92630206	6
8	Vis	-	-	-	-	31439565	4
9	Garde-boue ar.brut	-	-	-	-	31437073	1
	Garde-boue arrière noir	-	-	-	-	89000216	1
10	Support g-boue AR	-	-	-	-	31439160	1
11	Vis M6X20	-	-	-	-	98054320	6
12	Rondelle	-	-	-	-	95000206	10
13	Caoutchouc	-	-	-	-	93110060	4
14	Rondelle 6,5x20x2	-	-	-	-	95100141	2

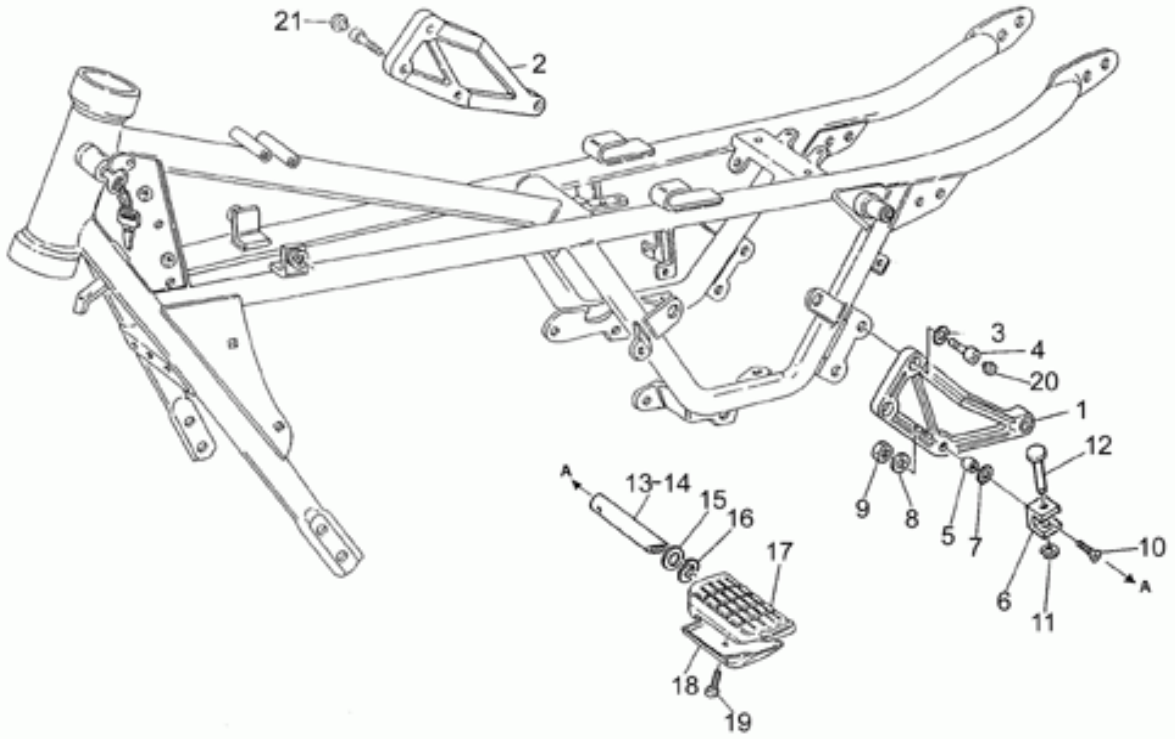

Ref.	Description	Year	I.M.	Country	Version	Code	Qty
1	Support r-p. G pass.	-	-	-	-	23446010	1
2	Support r-p. pass.dr.	-	-	-	-	23443510	1
3	Rondelle élastique	-	-	-	-	61270300	4
4	Vis	-	-	-	-	98622420	4
5	Douille	-	-	-	-	29436450	2
6	Plaque fdc r-pied	-	-	-	-	66441730	2
7	Rondelle élastique	-	-	-	-	95021108	2
8	Rondelle élastique	-	-	-	-	61270300	2
9	Ecrou	-	-	-	-	92630508	2
10	Vis	-	-	-	-	98250830	2
11	Bague de butée	-	-	-	-	90280006	2
12	Pivot	-	-	-	-	66440630	2
13	Tuyau rep.-pieds av.d.	-	-	-	-	66440730	1
14	Tuyau rep.-pieds av.g.	-	-	-	-	66441830	1
15	Cale	-	-	-	-	66441630	2
16	Rondelle élastique	-	-	-	-	51609800	2
17	Repose pieds	-	-	-	-	66443230	2
18	Plaquette	-	-	-	-	31441260	2
19	Vis	-	-	-	-	98304014	2
20	Caoutchouc	-	-	-	-	93180206	1
21	Bouchon	-	-	-	-	23943410	5

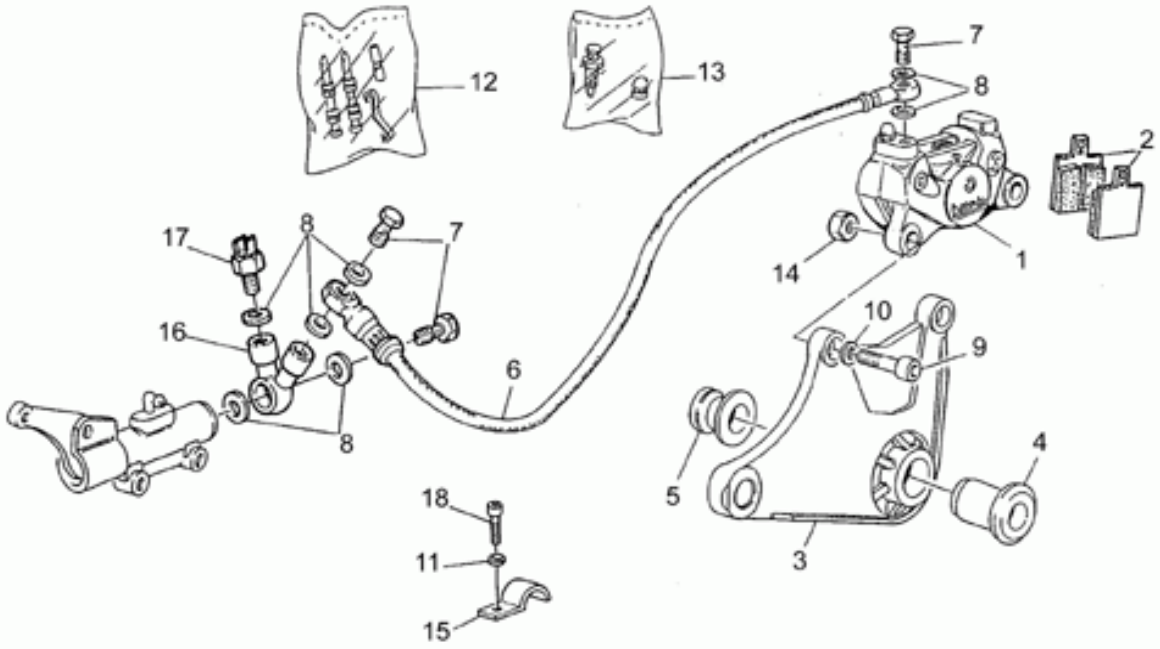

Ref.	Description	Year	I.M.	Country	Version	Code	Qty
1	Pince frein arrière	-	-	-	-	23653011	1
2	Plaquettes-paire BREMBO	-	-	-	-	27654610	1
3	Plaq. fix pince frein	-	-	-	-	27635811	1
4	Bague	-	-	-	-	31634230	1
5	Entretoise	-	-	-	-	31634130	1
6	Tube frein	-	-	-	-	28657500	1
7	Vis spéciale	-	-	-	-	95990028	3
8	Joint 1mm	-	-	-	-	25656100	7
9	Vis	-	-	-	-	98612425	2
10	Rondelle élastique	-	-	-	-	61270300	2
11	Rondelle	-	-	-	-	95000206	1
12	Pivots+ressorts pince BREMBO	-	-	-	-	23659111	1
13	Purge+capuchon BREMBO	-	-	-	-	31659260	1
14	Ecrou	-	-	-	-	92602208	1
15	Cavalier	-	-	-	-	93301313	1
16	Raccord	-	-	-	-	19668000	1
17	Interrupteur	-	-	-	-	63657000	1
18	Vis	-	-	-	-	98622310	1

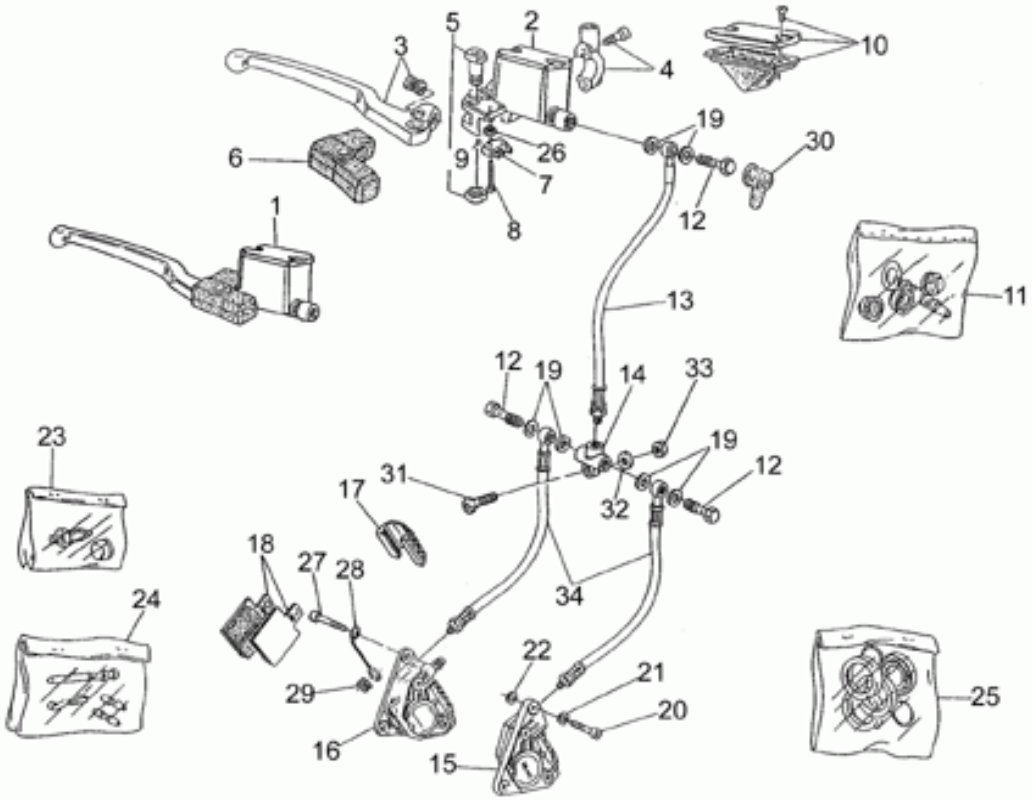

Ref.	Description	Year	I.M.	Country	Version	Code	Qty
1	Maît. cyl. frein AV	-	-	-	-	30660180	1
2	Maît. cyl. frein AV	-	-	-	-	28660278	1
3	Levier frein	-	-	-	-	30605680	1
4	Cavalier	-	-	-	-	27664075	1
5	Pivot	-	-	-	-	27604815	1
6	Capuchon	-	-	-	-	27663615	1
7	Minirupteur	-	-	-	-	30749860	1
8	Vis	-	-	-	-	98200214	2
9	Bille	-	-	-	-	92295708	1
10	Couvercle pompe	-	-	-	-	27661115	1
11	Kit révision pompe	-	-	-	-	28659378	1
12	Vis spéciale	-	-	-	-	95990028	3
13	Tube frein AV	-	-	-	-	31657165	1
14	Répartiteur	-	-	-	-	31656860	1
15	Pince frein AV G	-	-	-	-	31652265	1
16	Pince frein AV D	-	-	-	-	31652365	1
17	Couvercle pince frein GRIMECA	-	-	-	-	31654765	2
18	Plaquettes-paire GRIMECA	-	-	-	-	31654665	2
19	Joint 1mm	-	-	-	-	25656100	6
20	Vis	-	-	-	-	98622422	3
21	Rondelle élastique	-	-	-	-	61270300	4
22	Rondelle	-	-	-	-	95100250	1
	Rondelle 8,5X18X0,8	-	-	-	-	95100251	1
23	Purge+capuchon GRIMECA	-	-	-	-	31659265	2
24	Axes+ressort GRIMECA	-	-	-	-	31659165	2
25	Kit révision pince GRIMECA	-	-	-	-	31659065	2
26	Ecrou	-	-	-	-	92601002	2
27	Vis M8X25	-	-	-	-	98622425	1
28	Guide-câble	-	-	-	-	23655770	1
29	Bague	-	-	-	-	91551120	1
30	Capuchon	-	-	-	-	39663801	1
31	Vis	-	-	-	-	98230630	1
32	Entretoise	-	-	-	-	91180605	1
33	Ecrou M6x1	-	-	-	-	92630106	1
34	Tube frein AV	-	-	-	-	31658865	2

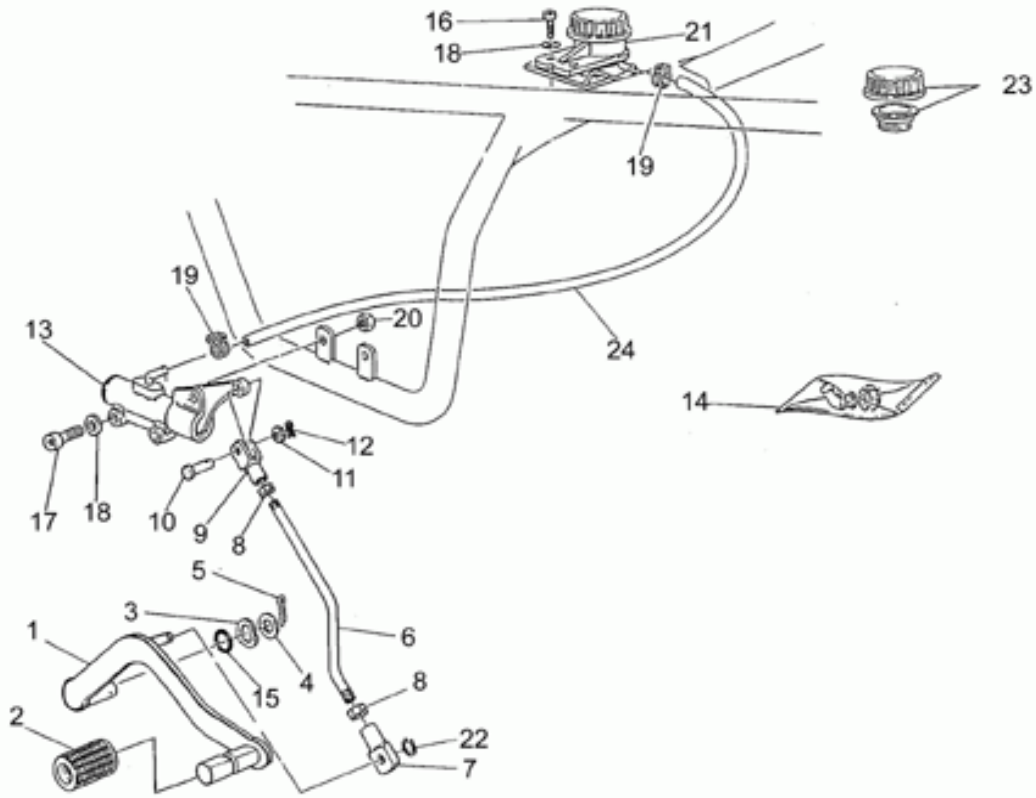

Ref.	Description	Year	I.M.	Country	Version	Code	Qty
1	Levier de frein AR	-	-	-	-	31677060	1
2	Caoutchouc	-	-	-	-	14251001	1
3	Rondelle élastique	-	-	-	-	95129260	1
4	Rondelle plate	-	-	-	-	95004215	1
5	Goupille	-	-	-	-	95500227	1
6	Tirant	-	-	-	-	31675280	1
7	Bloc	-	-	-	-	18257551	1
8	Ecrou	-	-	-	-	92690073	2
9	Fourchette	-	-	-	-	31626860	1
10	Goupille	-	-	-	-	95770265	1
11	Rondelle	-	-	-	-	95129110	1
12	Goupille	-	-	-	-	95500222	1
13	Maît.cyl. frein AR	-	-	-	-	31666990	1
14	Gr.révision raccordde pomp	-	-	-	-	19659500	1
15	Joint torique	-	-	-	-	90706141	1
16	Vis	-	-	-	-	98822316	2
17	Vis M6X30	-	-	-	-	98620330	2
18	Rondelle	-	-	-	-	95000206	4
19	Collier	-	-	-	-	19157800	2
20	Ecrou M6x1	-	-	-	-	92630106	2
21	Réserv. huile freins	-	-	-	-	65663500	1
22	Bague seeger	-	-	-	-	90271008	1
23	Bouchon réservoir	-	-	-	-	17661052	1
24	Tuyau	-	-	-	-	008239500500	1

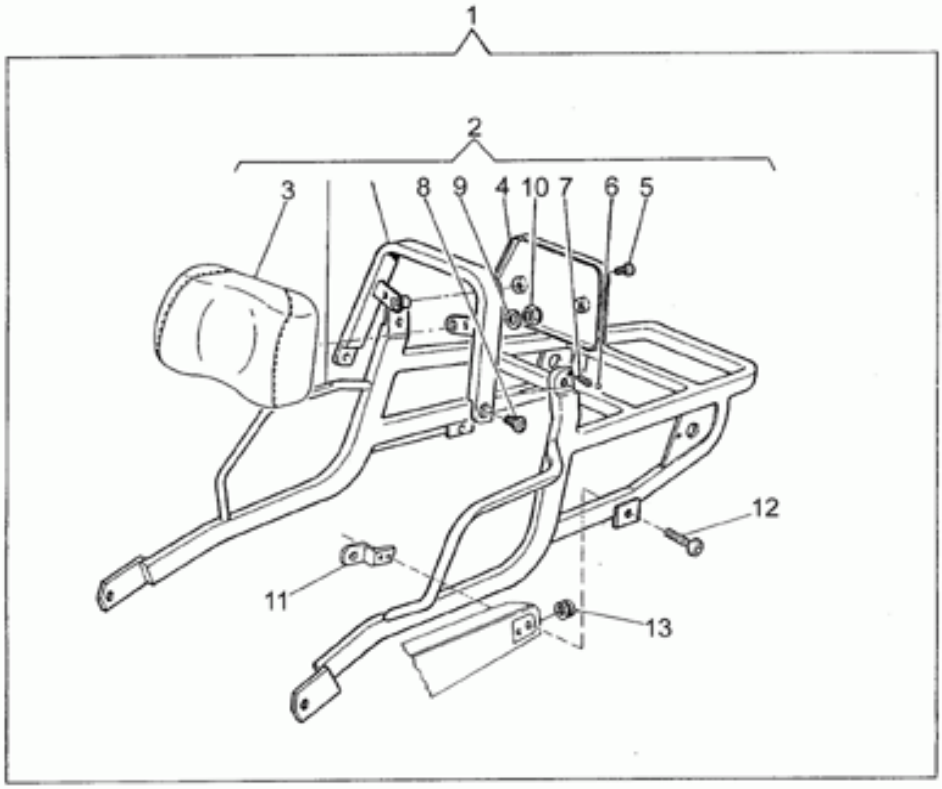

Ref.	Description	Year	I.M.	Country	Version	Code	Qty
1	Kit porte-bagages	-	-	-	-	31676282	1
2	Porte-bagages avecdos.basculan	-	-	-	-	31466581	1
3	Coussin dossier	-	-	-	-	03468000	1
4	Couvercle	-	-	-	-	03468200	1
5	Vis	-	-	-	-	98230619	2
6	Bille	-	-	-	-	92295708	1
7	Ressort	-	-	-	-	94321007	1
8	Vis	-	-	-	-	31468165	2
9	Rondelle 6,15x11x0,8	-	-	-	-	95004206	2
10	Ecrou	-	-	-	-	92601206	2
11	Bride	-	-	-	-	31575565	2
12	Vis	-	-	-	-	98231023	2
13	Caoutchouc	-	-	-	-	91551085	2

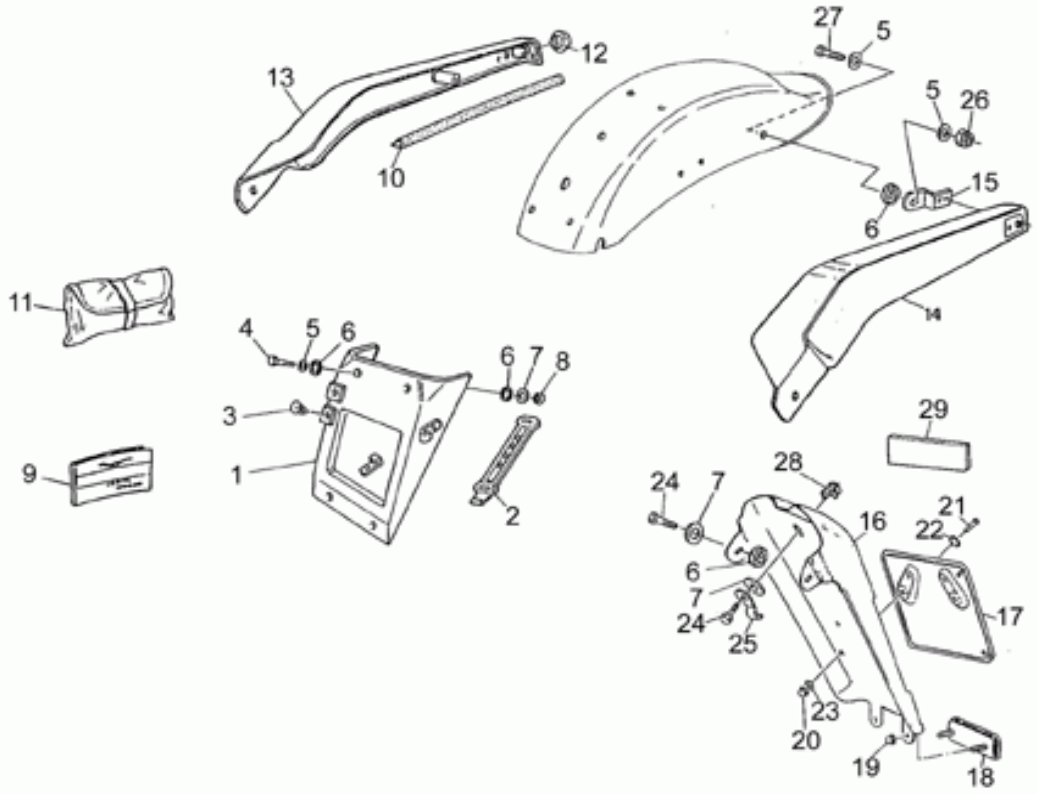

Ref.	Description	Year	I.M.	Country	Version	Code	Qty
1	Bavette anti-éclaboussures	-	-	-	-	31438665	1
2	Elastique de fixation	-	-	-	-	29728960	1
3	Caoutchouc	-	-	-	-	93180060	2
4	Vis	-	-	-	-	98054325	2
5	Rondelle	-	-	-	-	95000206	6
6	Caoutchouc	-	-	-	-	93110060	14
7	Rondelle 6,5x20x2	-	-	-	-	95100141	9
8	Ecrou M6x1	-	-	-	-	92630106	4
9	Manuel instructions -I-D-F-UK-	-	-	-	-	31900068	1
10	Joint	-	-	-	-	008239310700	1
11	Trousse à outils	-	-	-	-	20909920	1
12	Bouchon	-	-	-	-	93180245	2
13	Protection cadre d.	-	-	-	-	31457865	1
14	Protection cadre g.	-	-	-	-	31459165	1
15	Plaquette	-	-	-	-	31575560	2
16	Rallonge porte-plaque	-	-	-	-	31438065	1
17	Porte-plaque	-	-	-	-	39474600	1
18	Catadioptre	-	-	-	-	31745865	1
19	Ecrou M4x0,7	-	-	-	-	92630104	2
20	Ecrou	-	-	-	-	92630105	4
21	Vis	-	-	-	-	98054212	4
22	Joint torique	-	-	-	-	90706035	4
23	Rondelle	-	-	-	-	95000205	4
24	Vis M6X16	-	-	-	-	98054316	3
25	Cavalier	-	-	-	-	93301313	1
26	Ecrou M6x1	-	-	-	-	92630206	2
27	Vis	-	-	-	-	98054314	2
28	Ecrou en cage	-	-	-	-	92660601	3
29	Garniture adhesif	-	-	-	-	29579460	1

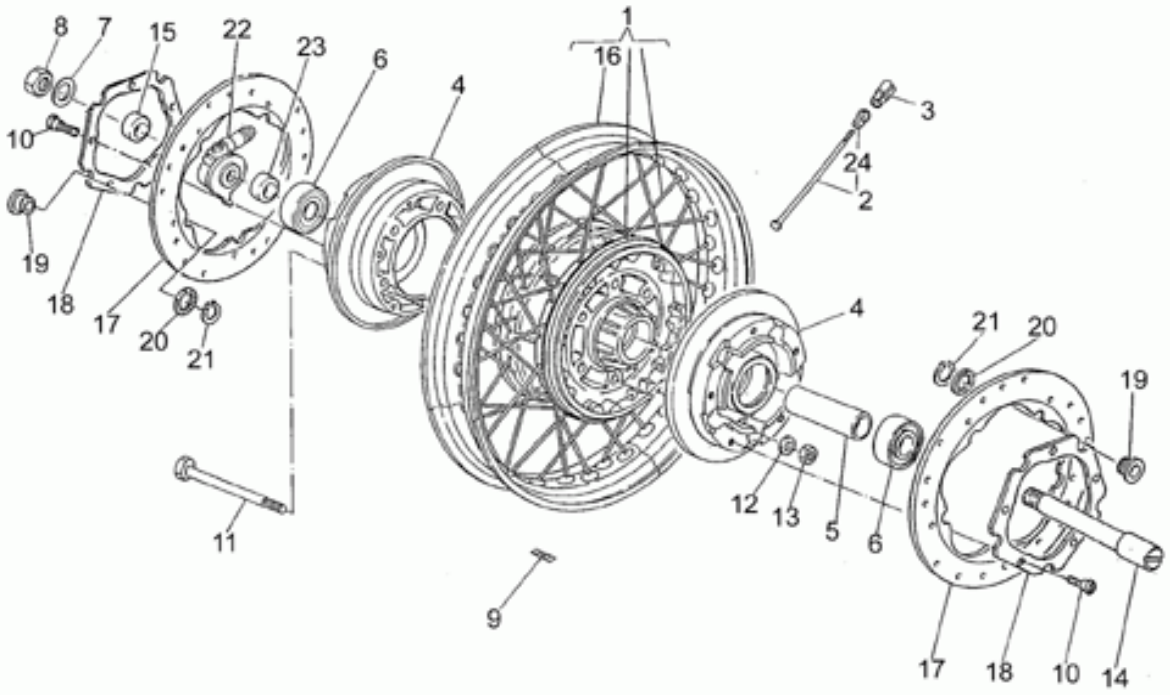

Ref.	Description	Year	I.M.	Country	Version	Code	Qty
1	Roue AV nue 2,15x18"	-	-	-	-	31610365	1
2	Rayon	-	-	-	-	39611601	36
3	Contrepoids 15 gr.	-	-	-	-	12616101	1
	Contrepoids 20 gr.	-	-	-	-	12616102	1
	Contrepoids 30 gr.	-	-	-	-	12616103	1
4	Bride	-	-	-	-	31620365	2
5	Entretoise roulements	-	-	-	-	31615260	1
6	Roulement	-	-	-	-	92204221	2
7	Rondelle 17X27X2	-	-	-	-	95004217	1
8	Ecrou M16X1,5	-	-	-	-	92602516	1
9	Plaque Moto Guzzi	-	-	-	-	31619865	1
10	Vis	-	-	-	-	30611460	10
11	Vis	-	-	-	-	98052470	5
12	Rondelle	-	-	-	-	14615901	5
13	Ecrou	-	-	-	-	92630508	5
14	Axe de roue AV	-	-	-	-	31614160	1
15	Entretoise	-	-	-	-	31616361	2
16	Jante avant 2,15x18"	-	-	-	-	23610870	1
17	Disque frein	-	-	-	-	30635860	2
18	Bride	-	-	-	-	30613760	1
19	Bague	-	-	-	-	28613560	10
20	Ressort à godet	-	-	-	-	28618860	10
21	Bague seeger	-	-	-	-	90271022	10
22	Renvoi compteur km	-	-	-	-	31762561	1
23	Entretoise	-	-	-	-	31616360	2
24	Nipple	-	-	-	-	55611700	36

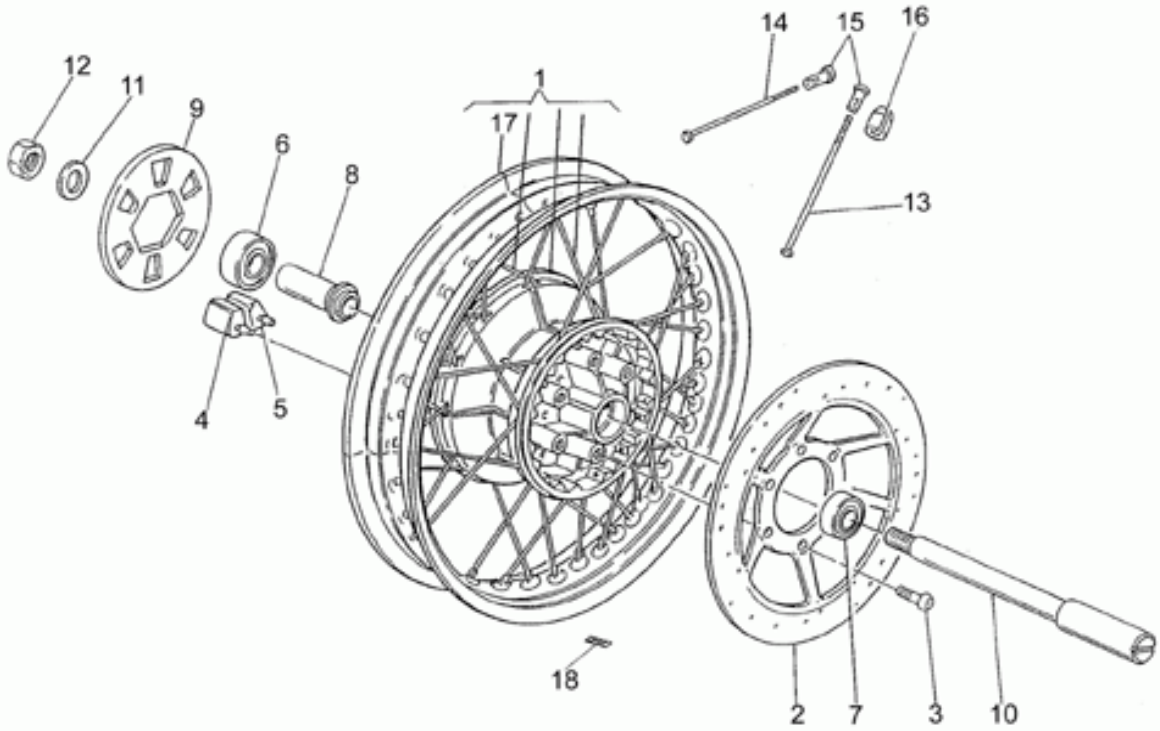

Ref.	Description	Year	I.M.	Country	Version	Code	Qty
1	Roue AR cpl	-	-	-	-	31630365	1
2	Disque frein	-	-	-	-	31613380	1
3	Vis M8X25	-	-	-	-	98622425	6
4	Joint en caoutchouc d.	-	-	-	-	19632501	6
5	Joint en caoutchouc g.	-	-	-	-	19632502	6
6	Roulement	-	-	-	-	92204218	1
7	Roulement	-	-	-	-	92204217	1
8	Entretoise	-	-	-	-	27633910	1
9	Entretoise	-	-	-	-	27356910	1
10	Axe de roue AR	-	-	-	-	31633330	1
11	Rondelle	-	-	-	-	14634400	1
12	Ecrou	-	-	-	-	92602316	1
13	Rayon long	-	-	-	-	23631470	18
14	Rayon court	-	-	-	-	23631170	18
15	Nipples	-	-	-	-	27631250	36
16	Contrepoids 15 gr.	-	-	-	-	12616101	1
	Contrepoids 20 gr.	-	-	-	-	12616102	1
	Contrepoids 30 gr.	-	-	-	-	12616103	1
17	Jante arrière 250x16"	-	-	-	-	23630770	1
18	Plaque Moto Guzzi	-	-	-	-	31619865	1

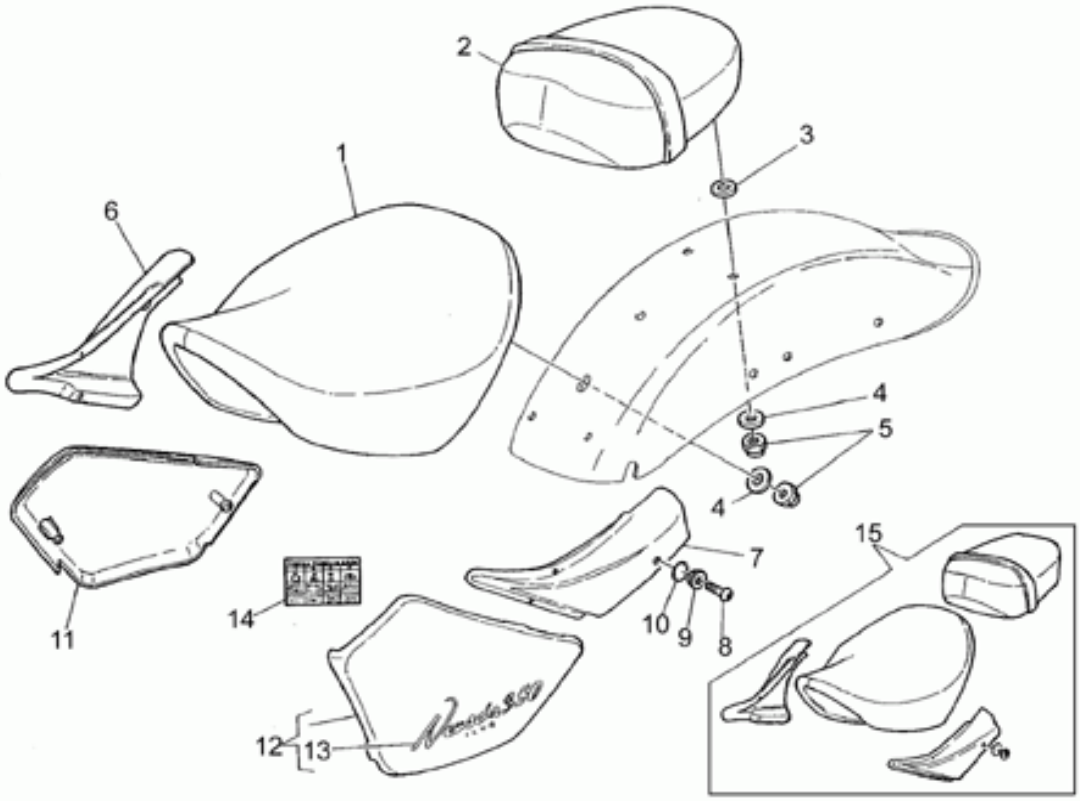

Ref.	Description	Year	I.M.	Country	Version	Code	Qty
1	Selle pilote	-	-	-	-	31460576	1
2	Selle passager	-	-	-	-	31464081	1
3	Caoutchouc	-	-	-	-	93110082	2
4	Rondelle 6,5x20x2	-	-	-	-	95100141	4
5	Ecrou M6x1	-	-	-	-	92630206	4
6	Cloison avant d.chr	-	-	-	-	31469081	1
7	Cloison avant g.chr	-	-	-	-	31469181	1
8	Vis	-	-	-	-	98230826	2
9	Entretoise	-	-	-	-	31469281	2
10	Joint torique	-	-	-	-	90706092	2
11	Recouvrement d.brut	-	-	-	-	234762101	1
	Recouvrement d.noir	-	-	-	-	89000225	1
12	Recouvrement g.brut	-	-	-	-	314763621	1
	Recouvrement g.noir	-	-	-	-	89000228	1
13	Décalco "Nevada 350 Club" or	-	-	-	-	31922088	2
14	Décal tabelle fusibles	-	-	-	-	31945467	1
15	Selles	-	-	-	-	31460581	1

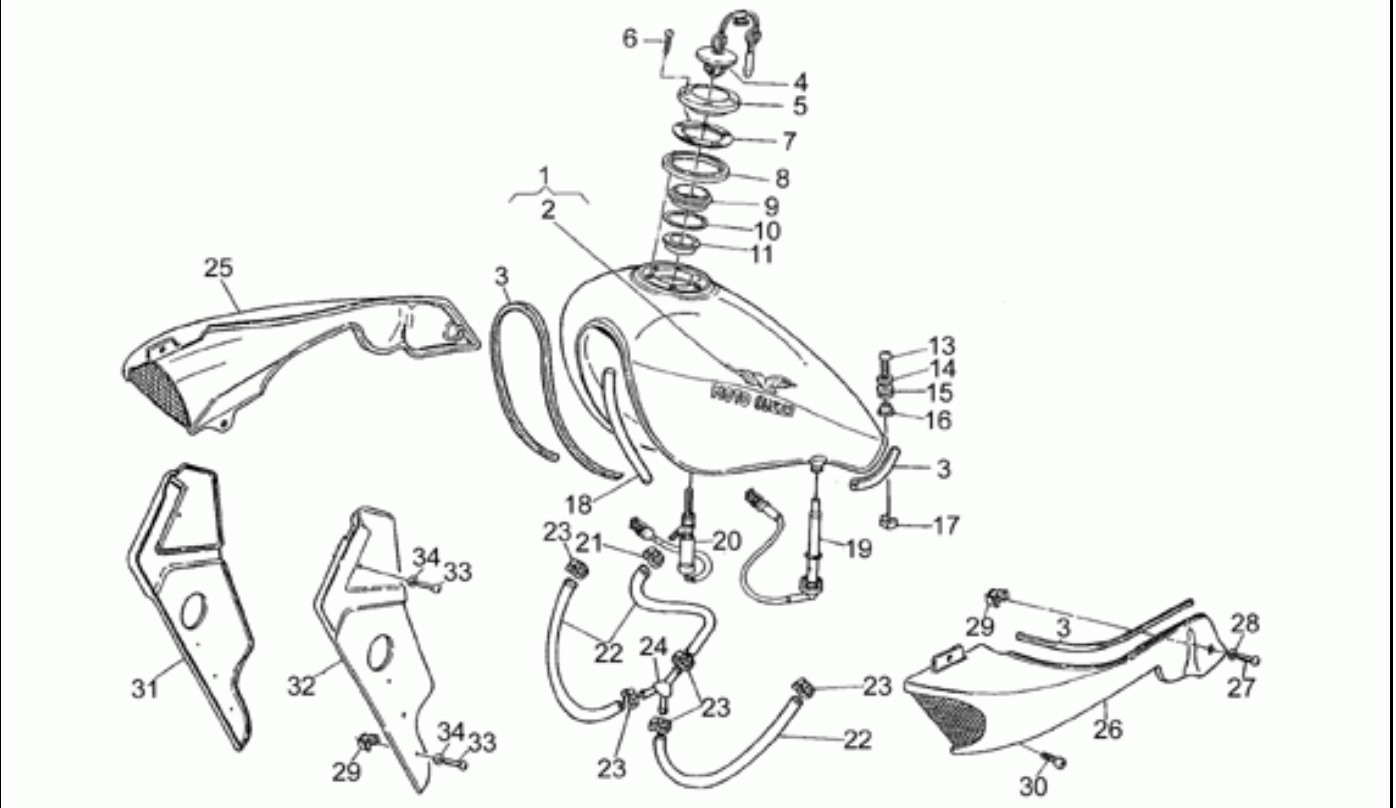

Ref.	Description	Year	I.M.	Country	Version	Code	Qty
1	Réservoir ess. noir/vert	-	-	-	b/gr	89000208	1
	Réservoir carburant gris/noir	-	-	-	b/gy	89000210	1
	Réservoir ess. noir/orange	-	-	-	b/o	89000207	1
	Réservoir carburant rouge/noir	-	-	-	b/r	89000209	1
	Réservoir brut	-	-	-	gr	31100283	1
2	Déc.d. "Moto Guzzi" or/noire	-	-	-	-	30917860	1
	Déc.g. "Moto Guzzi" or/noire	-	-	-	-	30917960	1
3	Joint	-	-	-	-	008239310700	1
4	Bouchon réservoir	-	-	-	-	03103900	1
5	Bride	-	-	-	-	03101900	1
6	Vis	-	-	-	-	03103200	5
7	Bague	-	-	-	-	03103500	1
8	Joint	-	-	-	-	03102400	1
9	Embout pour bouchon	-	-	-	-	03102200	1
10	Joint	-	-	-	-	03101600	1
11	Reduction 38 mm	-	-	-	-	03101720	1
13	Vis	-	-	-	-	98230830	1
14	Rondelle	-	-	-	-	95100239	1
15	Entretoise	-	-	-	-	31103565	1
16	Caoutchouc	-	-	-	-	91551131	1
17	Ecrou en cage	-	-	-	-	92660801	8
18	Tuyau reniflard radiateur	-	-	-	-	008239440500	1
19	Sonde niveau essence	-	-	-	-	31103081	1
20	Soupape carburant	-	-	-	-	37105305	1
21	Collier	-	-	-	-	93305017	1
22	Tuyau essence	-	-	-	-	008239560800	1
23	Collier	-	-	-	-	28157950	5
24	Raccord 3 voies	-	-	-	-	29106860	1
25	Flanc d.chromé	-	-	-	-	31570681	1
26	Flanc g.chromé	-	-	-	-	31570781	1
27	Vis 6X25	-	-	-	-	98230626	2
28	Rondelle 6,15x11x0,8	-	-	-	-	95004206	4
29	Ecrou en cage	-	-	-	-	92660601	6
30	Vis M6X20	-	-	-	-	98230621	2
31	Cloison avant d.noir	-	-	-	-	31575365	1
32	Cloison avant g.noir	-	-	-	-	31575465	1
33	Vis	-	-	-	-	98230620	4
34	Rondelle	-	-	-	-	95001206	4

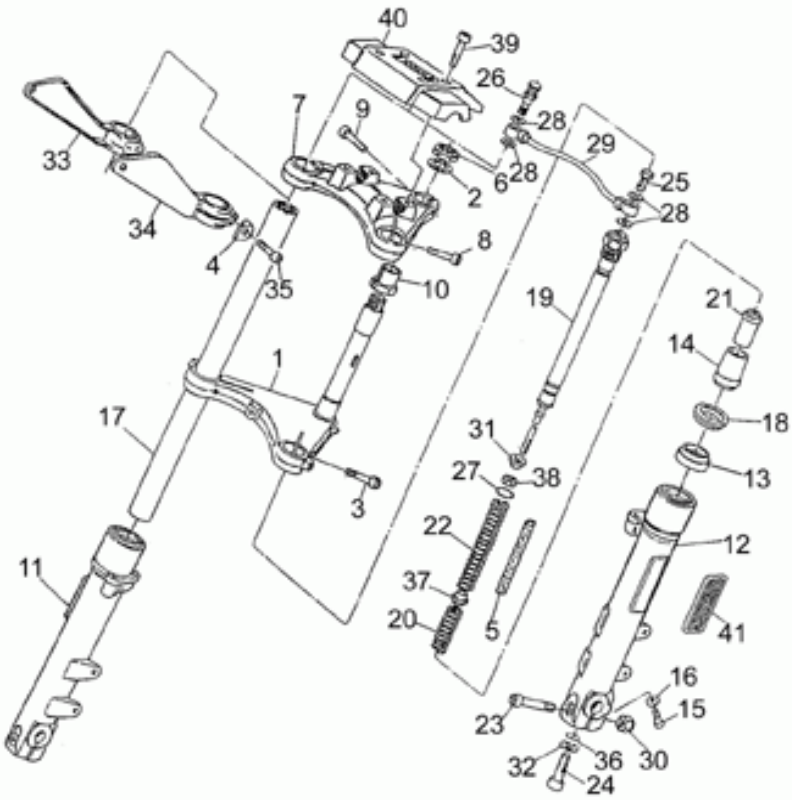

Ref.	Description	Year	I.M.	Country	Version	Code	Qty
1	Plaque inf.	-	-	-	-	31494065	1
2	Rondelle bouchon fourreau	-	-	-	-	18513560	1
3	Vis	-	-	-	-	98612535	2
4	Entretoise	-	-	-	-	23497910	2
5	Tube anti-frottement	-	-	-	-	23526370	2
6	Bouchon tube	-	-	-	-	18513460	1
7	Plaque sup. fourche POLIZIA	-	-	-	-	31493140	1
8	Vis	-	-	-	-	98610540	2
9	Vis	-	-	-	-	98612535	1
10	Douille bloc. direction	-	-	-	-	18516660	1
11	Fourreau D	-	-	-	-	31522565	1
12	Fourreau G	-	-	-	-	31522665	1
13	Joint spi	-	-	-	-	90403857	2
14	Douille	-	-	-	-	20527620	2
15	Vis	-	-	-	-	98622320	2
16	Rondelle	-	-	-	-	95100116	4
17	Tige	-	-	-	-	23525470	2
18	Pare-poussière	-	-	-	-	31524550	2
19	Amortisseur	-	-	-	-	23526470	2
20	Contre-ressort	-	-	-	-	23526610	2
21	Tampon fin course	-	-	-	-	28527540	2
22	Ressort	-	-	-	-	23526910	2
23	Vis	-	-	-	-	98620545	2
24	Vis	-	-	-	-	98622530	2
25	Vis percée	-	-	-	-	28556450	1
26	Soupape air	-	-	-	-	28556250	1
27	Bague d'étanchéité	-	-	-	-	90706282	2
28	Rondelle en cuivre	-	-	-	-	28556350	4
29	Tuyau	-	-	-	-	19529660	1
30	Ecrou	-	-	-	-	92602210	2
31	Rondelle	-	-	-	-	28526540	2
32	Rondelle plate	-	-	-	-	27499120	2
33	Support droite	-	-	-	-	31496165	1
34	Support gauche	-	-	-	-	31496265	1
35	Vis M8X25	-	-	-	-	98622425	2
36	Joint torique	-	-	-	-	90706094	2
37	Entretoise	-	-	-	-	23527910	2
38	Ecrou	-	-	-	-	92602308	2
39	Vis M8X35	-	-	-	-	98620435	4
40	Plaque fixation guidon	-	-	-	-	23500210	1
41	Catadioptre, ambre	-	-	-	-	31781665	2

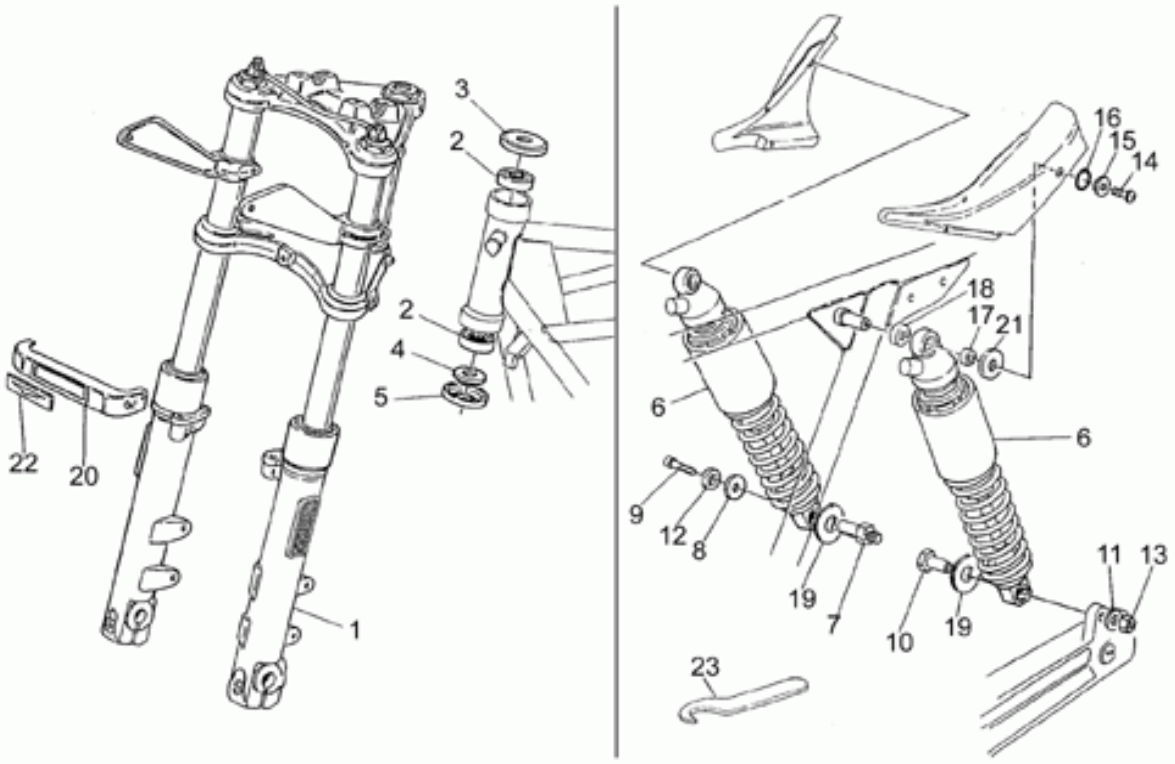

Ref.	Description	Year	I.M.	Country	Version	Code	Qty
1	Fourche Av.	-	-	-	-	31490265	1
2	Roulement roul.con.	-	-	-	-	92249225	2
3	Rondelle	-	-	-	-	14494600	1
4	Rondelle d'appui	-	-	-	-	14516700	1
5	Pare-poussière	-	-	-	-	14517000	1
6	Amortisseur BITUBO	-	-	-	-	31550281	2
7	Pivot	-	-	-	-	23555282	1
8	Entretoise	-	-	-	-	95100235	1
9	Vis	-	-	-	-	98822416	1
10	Pivot	-	-	-	-	23555280	1
11	Rondelle	-	-	-	-	95129180	1
12	Rondelle élastique	-	-	-	-	61270300	2
13	Ecrou	-	-	-	-	92602410	1
14	Vis	-	-	-	-	98230826	2
15	Entretoise	-	-	-	-	31469281	2
16	Joint torique	-	-	-	-	90706092	2
17	Entretoise	-	-	-	-	91180804	2
18	Entretoise	-	-	-	-	91181407	2
19	Rondelle	-	-	-	-	23557690	2
20	Cache support indicateurs	-	-	-	-	31751365	1
21	Rondelle	-	-	-	-	95100256	2
22	Plaquette autocollante	-	-	-	-	30769560	1
23	Clé de réglage amortisseurs	-	-	-	-	31912760	1

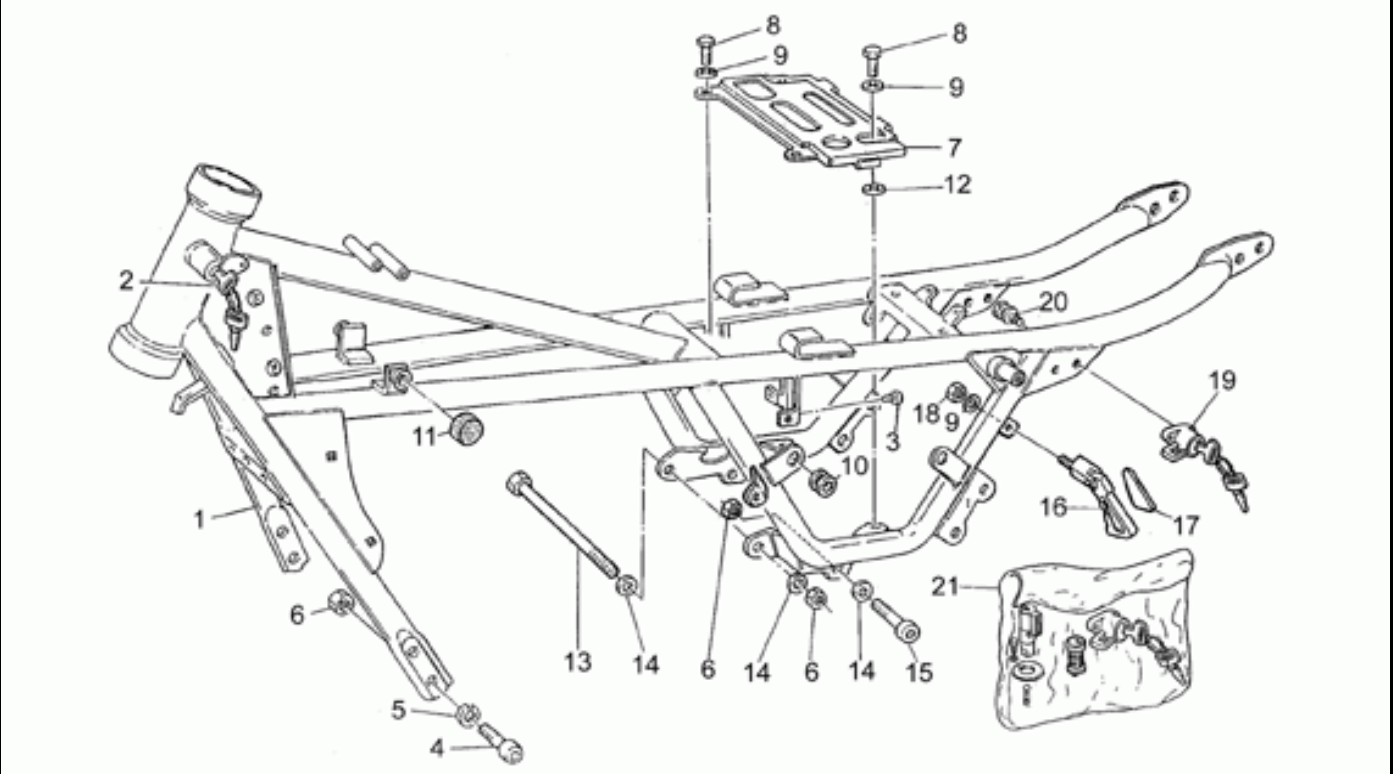

Ref.	Description	Year	I.M.	Country	Version	Code	Qty
1	Chassis	-	-	-	-	31400181	1
2	Serrure blocage direction	-	-	-	-	31782581	1
3	Tampon	-	-	-	-	19705900	2
4	Vis 25mm	-	-	-	-	98622525	4
5	Rondelle	-	-	-	-	95120105	4
6	Ecrou	-	-	-	-	92602210	6
7	Plaque	-	-	-	-	27418210	1
8	Vis	-	-	-	-	98054418	4
9	Rondelle	-	-	-	-	95004208	5
10	Caoutchouc	-	-	-	-	91551085	4
11	Tampon	-	-	-	-	39103400	2
12	Rondelle	-	-	-	-	95100253	7
	Rondelle 10,2x18x2	-	-	-	-	95004210	7
13	Pivot M10x205	-	-	-	-	98110199	1
14	Rondelle 10,2x18x2	-	-	-	-	95004210	7
15	Vis	-	-	-	-	98620555	2
16	Poignée	-	-	-	-	30464310	1
17	Décalcomanie	-	-	-	-	30920810	2
18	Ecrou	-	-	-	-	92630108	1
19	Serrure casque	-	-	-	-	66466815	1
20	Vis à arrachement	-	-	-	-	66468115	2
21	Kit serrure	-	-	-	-	31736881	1

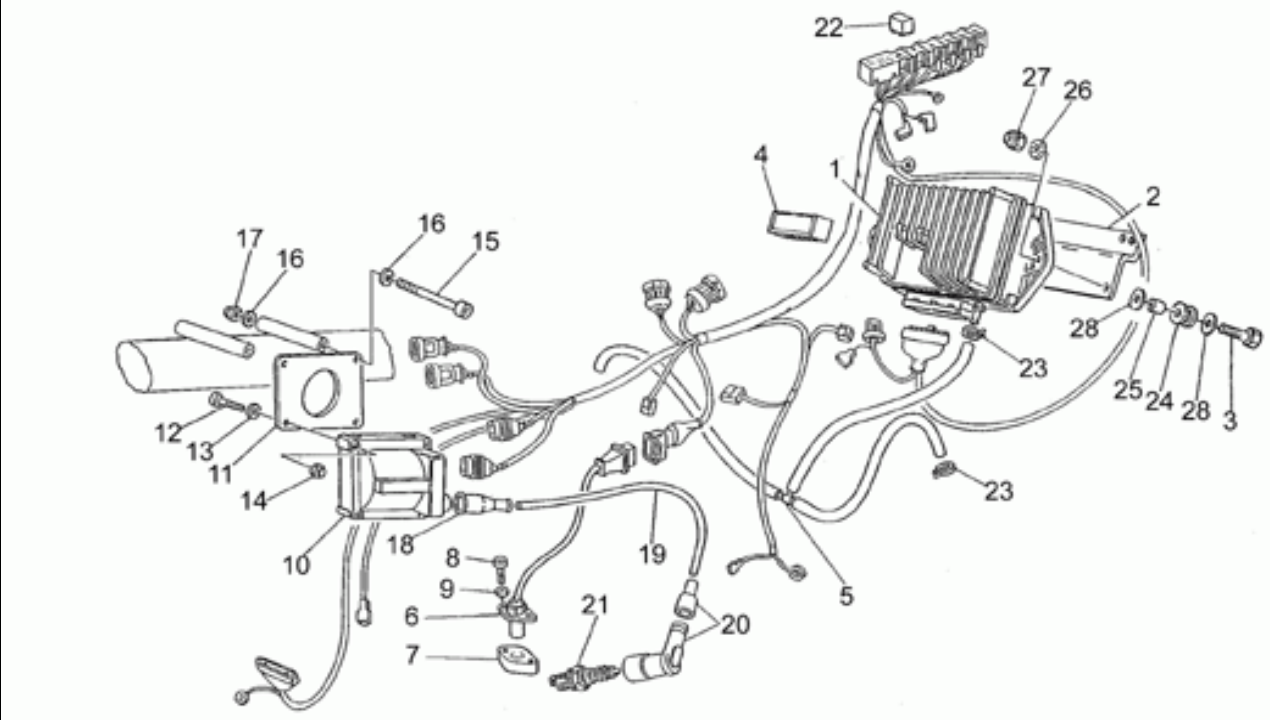

Ref.	Description	Year	I.M.	Country	Version	Code	Qty
1	Centrale MED 446A	-	-	-	-	29721450	1
2	Support	-	-	-	-	20723820	1
3	Vis	-	-	-	-	98230622	2
4	Plaquette antivibratile	-	-	-	-	19025300	2
5	Conduite doìte auxt.d'aspirat.	-	-	-	-	20108120	1
6	Capteur phase/tours	-	-	-	-	20721610	1
7	Bride	-	-	-	-	31722065	1
8	Vis	-	-	-	-	98620222	2
9	Rondelle	-	-	-	-	95004205	2
10	Bobine HT	-	-	-	-	30716500	2
11	Support bobine	-	-	-	-	20716720	2
12	Vis	-	-	-	-	98610125	4
13	Rondelle	-	-	-	-	95004204	4
14	Ecrou M4x0,7	-	-	-	-	92630104	4
15	Vis	-	-	-	-	98620360	2
16	Rondelle 6,15x11x0,8	-	-	-	-	95004206	4
17	Ecrou M6x1	-	-	-	-	92630106	2
18	Capuchon	-	-	-	-	14717600	2
19	Câble haute tension	-	-	-	-	17718350	2
20	Pipe bougie NGK	-	-	-	-	30717410	2
21	Bougie NGK BR8ES	-	-	-	-	31717061	2
22	Relais Siemens A302/B1008	-	-	-	-	30732560	1
23	Collier	-	-	-	-	61108500	3
24	Caoutchouc	-	-	-	-	91551080	2
25	Entretoise	-	-	-	-	91180608	2
26	Rondelle	-	-	-	-	95000206	2
27	Ecrou M6x1	-	-	-	-	92630206	2
28	Rondelle	-	-	-	-	95100120	4

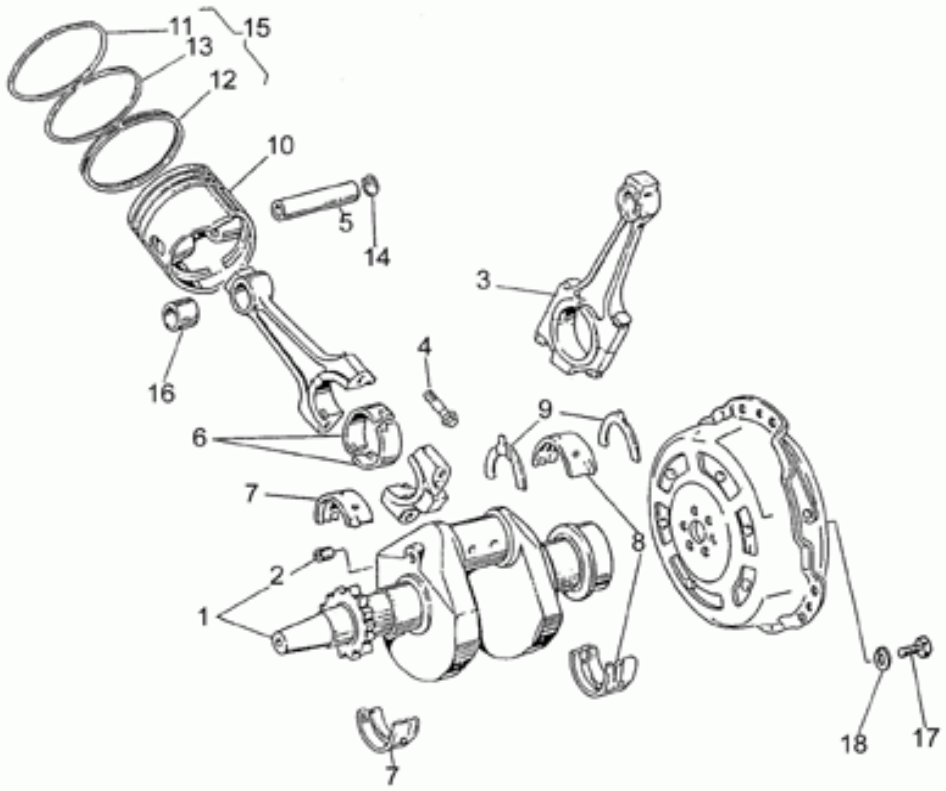

Ref.	Description	Year	I.M.	Country	Version	Code	Qty
1	Arbre moteur cpl.	-	-	-	-	19064121	1
2	Bouchon	-	-	-	-	19065400	1
3	Bielle	-	-	-	-	19061521	2
4	Vis	-	-	-	-	19062221	4
5	Axe	-	-	-	-	19061220	2
6	Demi-coussinet	-	-	-	-	19062022	4
7	Demi-couss.de vilebr.av.	-	-	-	-	19065623	2
8	Demi-couss.de vilebr.ar.	-	-	-	-	19066522	2
9	Butée	-	-	-	-	31066480	2
10	Piston	-	-	-	-	31060480	2
11	Segment d'étanchéité	-	-	-	-	19060700	2
12	Segment d'étanchéité	-	-	-	-	19061000	2
13	Segment d'étanchéité	-	-	-	-	27060820	2
14	Bague de butée	-	-	-	-	19061320	4
15	Segments - série	-	-	-	-	31060680	2
16	Bague	-	-	-	-	19061821	2
17	Vis	-	-	-	-	19067700	6
18	Rondelle	-	-	-	-	14615901	6

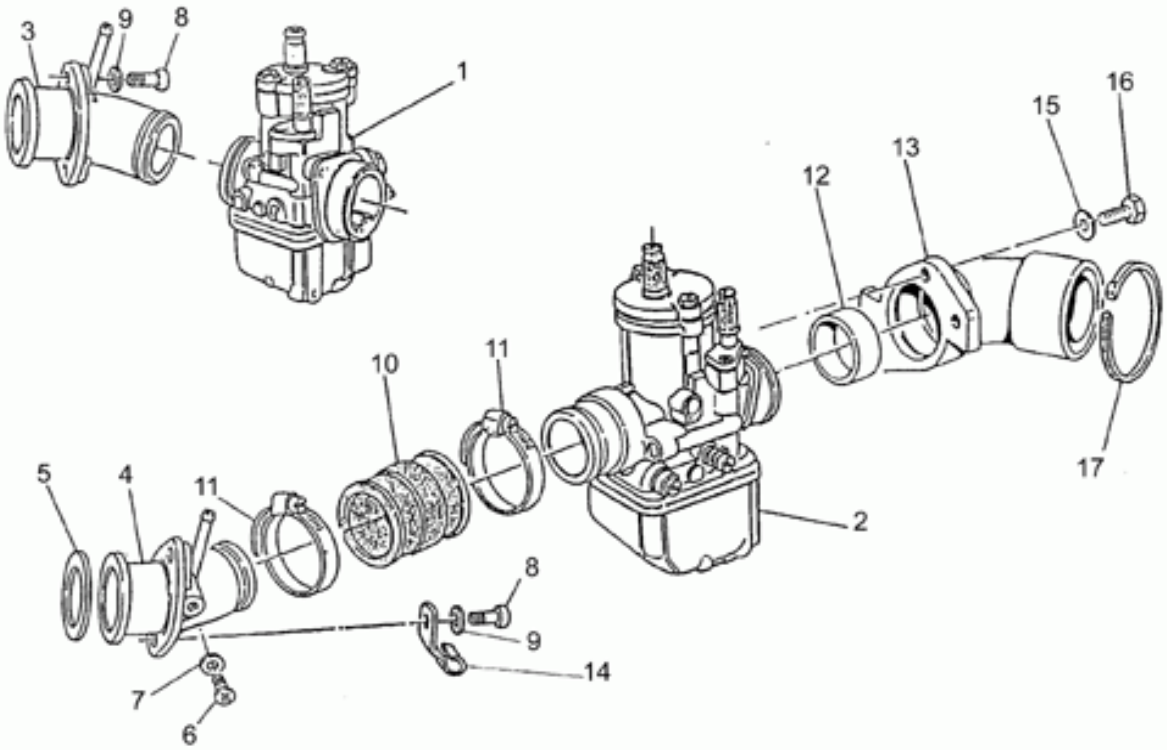

Ref.	Description	Year	I.M.	Country	Version	Code	Qty
1	Carburateur droit PHBH 28 BD	-	-	-	-	31112682	1
2	Carburateur gauche PHBH 28 BS	-	-	-	-	31112683	1
3	Pipe d.	-	-	-	-	31115082	1
4	Pipe g.	-	-	-	-	31115083	1
5	Joint	-	-	-	-	19115520	2
6	Vis	-	-	-	-	98310610	2
7	Rondelle	-	-	-	-	95100116	2
8	Vis M6X25	-	-	-	-	98622325	4
9	Rondelle spéciale	-	-	-	-	61013800	4
10	Manchon	-	-	-	-	31114380	2
11	Collier	-	-	-	-	93305031	4
12	Bague d'étanchéité	-	-	-	-	19114680	2
13	Collecteur	-	-	-	-	19114480	2
14	Collier	-	-	-	-	19718000	2
15	Rondelle	-	-	-	-	95004205	4
16	Vis	-	-	-	-	98054220	4
17	Collier	-	-	-	-	14609650	2

The mm 15,5 14 teeth 2nd gear pos.8 and mm 15,5 23 teeth 2nd gear pos.20, have to be placed from gearcase GH14246, and also on gearcase GH14220, 226, 227, from gearcase GH14229 to GH14238 on GH14220 e 244.

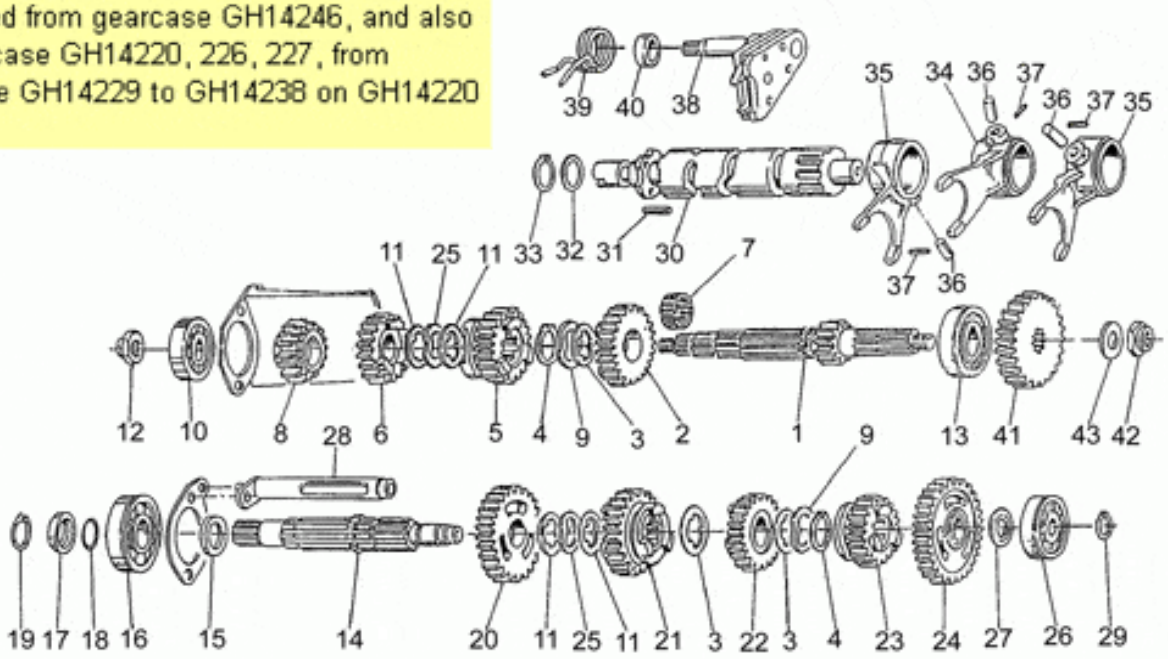

Ref.	Description	Year	I.M.	Country	Version	Code	Qty
1	Arbre primaire Z=11	-	-	-	-	23210570	1
2	Engrenage 5a AP Z=20	-	-	-	-	23212070	1
3	Rondelle éventail	-	-	-	-	19215460	3
4	Bague seeger	-	-	-	-	90271127	2
5	Engrenage 4a AP Z=18	-	-	-	-	19211861	1
6	Engrenage 3a AP Z=18	-	-	-	-	19211460	1
7	Cage à rouleaux	-	-	-	-	92251023	1
8	Engrenage 2a AP Z=14	-	-	-	-	19211361	1
	Engrenage 2a AP Z=14	-	-	-	-	23211372	1
9	Rondelle	-	-	-	-	19218062	2
10	Roulement AP	-	-	-	-	92218417	1
11	Rondelle d'appui	-	-	-	-	19214660	4
12	Ecrou	-	-	-	-	10054100	1
13	Roulement AP	-	-	-	-	92230320	1
14	Arbre secondaire	-	-	-	-	19213661	1
15	Entretoise	-	-	-	-	19212900	1
16	Roulement AS	-	-	-	-	92201220	1
17	Entretoise	-	-	-	-	19213720	1
18	Bague d'étanchéité 18,77X1,78	-	-	-	-	90706188	1
19	Bague seeger	-	-	-	-	90271121	1
20	Engrenage 2a AS Z=23	-	-	-	-	23214571	1
	Engrenage 2a AS Z=23	-	-	-	-	23214572	1
21	Engrenage 3a AS Z=23	-	-	-	-	19214860	1
22	Engrenage 4a AS Z=19	-	-	-	-	19215161	1
23	Engrenage 5a AS Z=18	-	-	-	-	23215270	1
24	Engrenage 1a AS Z=26	-	-	-	-	23214071	1
25	Rondelle	-	-	-	-	19218061	2
26	Roulement	-	-	-	-	92234716	1
27	Cale 1,5 mm	-	-	-	-	10214300	1
	Cale 1,7 mm	-	-	-	-	10214301	1
	Cale 1,8 mm	-	-	-	-	10214302	1
	Cale 1,9 mm	-	-	-	-	10214303	1
	Cale 2,1 mm	-	-	-	-	10214305	1
	Rondelle 2 mm	-	-	-	-	10214304	1
28	Egouttoir	-	-	-	-	23202074	1
29	Bague seeger	-	-	-	-	90271117	1
30	Desmodromique	-	-	-	-	19234420	1
31	Tige	-	-	-	-	19234600	4
32	Cale 1 mm	-	-	-	-	19355300	1
33	Anneau élastique	-	-	-	-	90271020	1
34	Fourchette AP	-	-	-	-	19231220	1
35	Fourchette AS	-	-	-	-	19231020	2
36	Rouleau	-	-	-	-	92297909	3

The mm 15,5 14 teeth 2nd gear pos.8 and mm 15,5 23 teeth 2nd gear pos.20, have to be placed from gearcase GH14246, and also on gearcase GH14220, 226, 227, from gearcase GH14229 to GH14238 on GH14220 e 244.

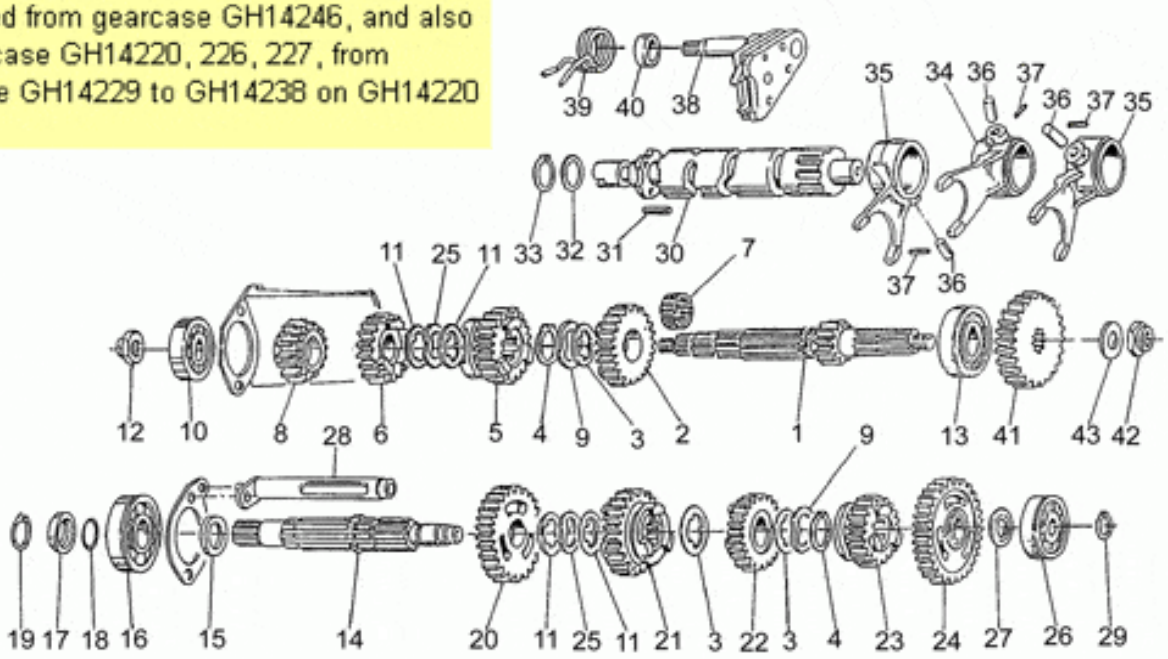

Ref.	Description	Year	I.M.	Country	Version	Code	Qty
37	Goupille	-	-	-	-	95520316	3
38	Preselecteur complet	-	-	-	-	20236220	1
39	Ressort	-	-	-	-	61238200	1
40	Bague	-	-	-	-	91182010	1
41	Engrenage Z=24	-	-	-	-	19211120	1
42	Ecrou	-	-	-	-	10054100	1
43	Rondelle d'appui	-	-	-	-	39238100	1

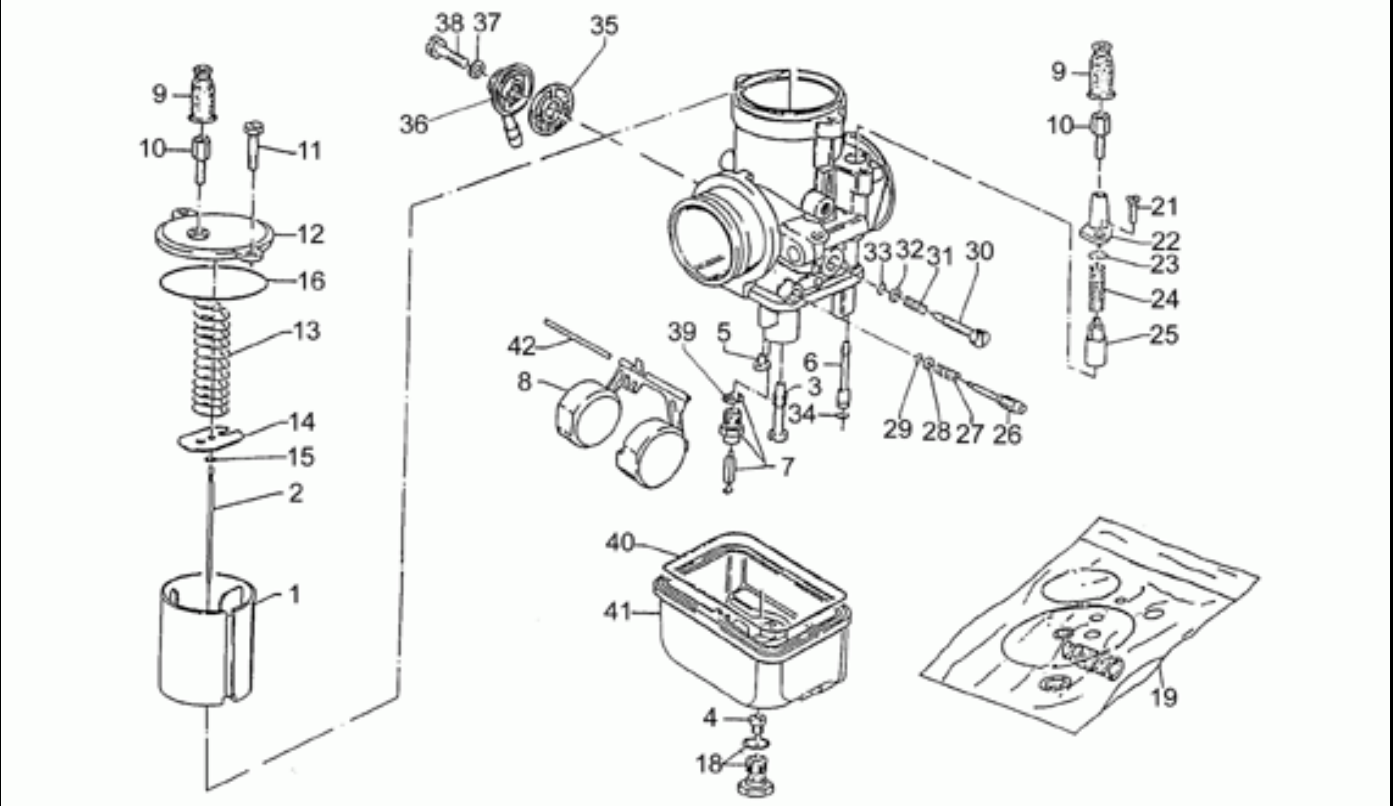

Ref.	Description	Year	I.M.	Country	Version	Code	Qty
1	Soupape gaz 30	-	-	-	-	27934820	2
2	Pointeau conique X57	-	-	-	-	31937780	2
3	Gicleur 262H	-	-	-	-	27935521	2
4	Jet maximum 105	-	-	-	-	19935750	2
5	Gicleur minimum 42	-	-	-	-	23935910	2
6	Jet démarrage 60	-	-	-	-	19936000	2
7	Vanne pointeau	-	-	-	-	19934600	2
8	Flotteur gr.9,5	-	-	-	-	27934315	2
9	Capuchon	-	-	-	K	0000000	4
10	Vis tendeur de fil	-	-	-	-	12937200	4
11	Vis	-	-	-	-	14934650	2
12	Couvercle	-	-	-	-	19935080	2
13	Ressort	-	-	-	-	0000000	2
14	Plaquette	-	-	-	-	19938580	2
15	Agrafe pointeau conique	-	-	-	-	65933600	2
16	Joint	-	-	-	K	0000000	2
18	Bouchon fix.bac	-	-	-	-	27933720	2
19	Jeu de joints	-	-	-	-	19939980	1
21	Vis	-	-	-	-	13937900	2
22	Couvercle dispositif dém.	-	-	-	-	17937450	2
23	Joint	-	-	-	K	0000000	1
24	Ressort de soupape	-	-	-	-	39937600	2
25	Soupape de démarrage	-	-	-	-	13937800	2
26	Vis réglage minimum	-	-	-	-	13936200	2
27	Ressort	-	-	-	-	13936300	2
28	Rondelle plate	-	-	-	-	65933700	2
29	Vis rég.mélange minimum	-	-	-	K	0000000	2
30	Vis réglage soupape gaz	-	-	-	-	13936600	2
31	Ressort	-	-	-	-	13936700	2
32	Rondelle plate	-	-	-	-	14931650	2
33	Vis rég.soupape gaz	-	-	-	K	0000000	2
34	Jet démarrage	-	-	-	K	0000000	2
35	Filtre essence	-	-	-	-	43934000	2
36	Pipette racc. tuyau essence	-	-	-	-	31934680	2
37	Joint vis	-	-	-	-	13934700	2
38	Vis fix.pipette	-	-	-	-	10934900	2
39	Vanne pointeau	-	-	-	K	0000000	2
40	Cuve	-	-	-	K	0000000	2
41	Cuve aluminium	-	-	-	-	19934480	2
	Cuve plastica	-	-	-	-	31934460	2
42	Axe flotteur	-	-	-	-	13933100	2

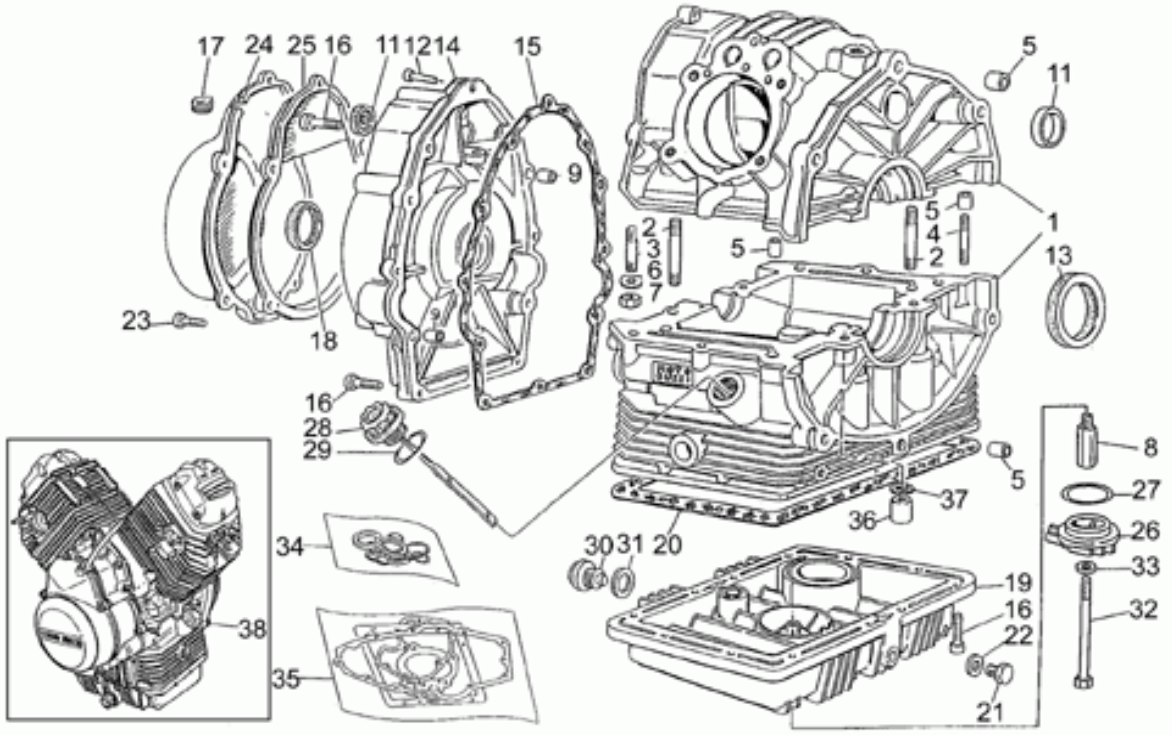

Ref.	Description	Year	I.M.	Country	Version	Code	Qty
1	Carter moteur grise	-	-	-	-	31000380	1
2	Vis sans tête	-	-	-	-	96451560	4
3	Vis sans tête	-	-	-	-	96451430	4
4	Vis sans tête	-	-	-	-	96508055	2
5	Bague	-	-	-	-	19015020	4
6	Rondelle élastique	-	-	-	-	61270300	6
7	Ecrou	-	-	-	-	92602208	6
8	Raccord	-	-	-	-	19003800	1
9	Bague	-	-	-	-	19002020	2
10	Bouchon	-	-	-	-	19016320	1
11	Bague d'étanchéité	-	-	-	-	90401530	1
12	Vis M6X30	-	-	-	-	98620330	12
13	Bague d'étanchéité	-	-	-	M1	90405367	1
	Bague d'étanchéité	-	-	-	M2	04000500	1
14	Couvercle gris	-	-	-	-	31001480	1
15	Joint	-	-	-	-	19001200	1
16	Vis	-	-	-	-	98620325	22
17	Caoutchouc	-	-	-	-	19007700	1
18	Bague d'étanchéité	-	-	-	-	90402840	1
19	Carter inférieur gris	-	-	-	-	20003520	1
20	Joint	-	-	-	-	19003602	1
21	Bouchon vid.huile	-	-	-	-	31003766	1
22	Garniture	-	-	-	-	10528900	1
23	Vis M6X35	-	-	-	-	98620335	5
24	Couvercle	-	-	-	-	27001636	1
25	Bride	-	-	-	-	27001136	1
26	Petit couvercle gris	-	-	-	-	20003410	1
27	Joint torique	-	-	-	-	90706444	1
28	Bouchon rempl. huile	-	-	-	-	27004985	1
29	Bague d'étanchéité	-	-	-	-	90706282	1
30	Bouchon vid.huile	-	-	-	-	12003702	1
31	Joint	-	-	-	-	95100709	1
32	Boulon	-	-	-	-	27152885	1
33	Joint	-	-	-	-	12154200	1
34	Joint spy-série	-	-	-	-	19999580	1
35	Joints moteur-série	-	-	-	-	19999021	1
36	Ecrou colonne	-	-	-	-	13021900	4
37	Rondelle	-	-	-	-	95129180	4
38	Moteur complet	-	-	-	-	31991082	1

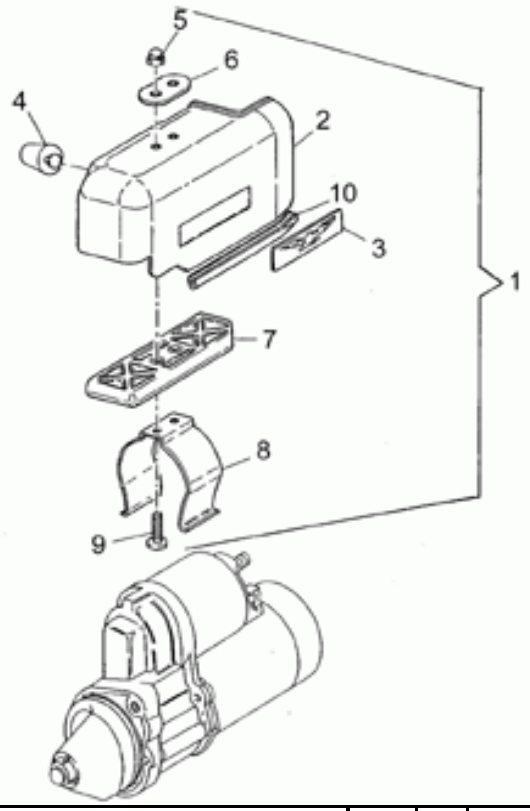

Ref.	Description	Year	I.M.	Country	Version	Code	Qty
1	Couvercle démarreur cpl.chromé	-	-	-	-	03733200	1
2	Couvercle dispositif dém.	-	-	-	-	03733300	1
3	Décalco "Aquilia"	-	-	-	-	01517700	1
4	Caoutchouc	-	-	-	-	98130577	1
5	Ecrou borgne	-	-	-	-	92781053	1
6	Plaquette	-	-	-	-	03436300	1
7	Entretoise isolante	-	-	-	-	03733000	1
8	Collier	-	-	-	-	03733400	1
9	Vis	-	-	-	-	03733500	1
10	Joint	-	-	-	-	008239310800	2

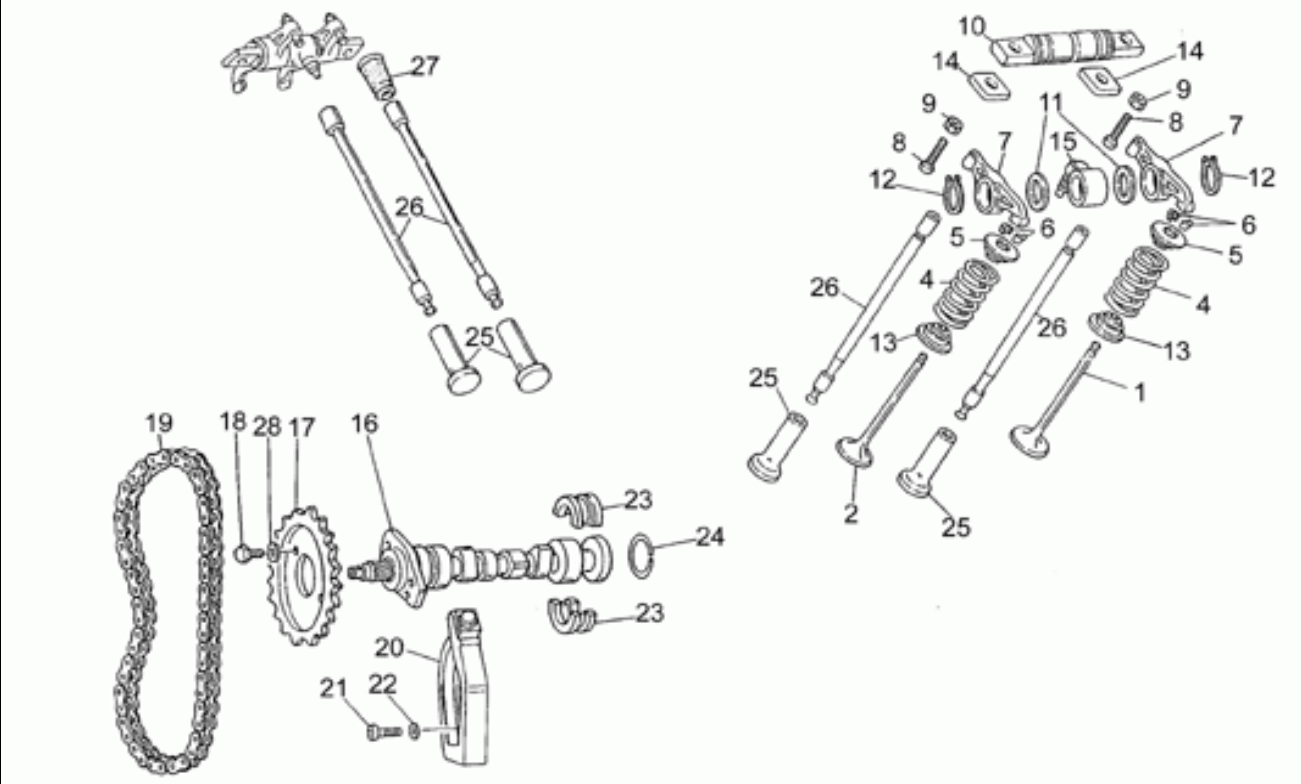

Ref.	Description	Year	I.M.	Country	Version	Code	Qty
1	Soupape d'admission	-	-	-	-	19036021	2
2	Soupape d'échappement	-	-	-	-	23036100	2
4	Ressort	-	-	-	-	27037521	4
5	Coupelle supérieur	-	-	-	-	31038015	4
6	Demi-clavette	-	-	-	-	61038100	8
7	Culbuteur	-	-	-	-	19030500	4
8	Vis	-	-	-	-	19034000	4
9	Ecrou M6x1	-	-	-	-	92602406	4
10	Axe culbuteur	-	-	-	-	19032000	2
11	Rondelle d'appui	-	-	-	-	19032300	4
12	Bague seeger	-	-	-	-	90271018	4
13	Coupelle inférieure	-	-	-	-	31037015	4
14	Cale	-	-	-	-	19032980	4
15	Manchon	-	-	-	-	19027500	2
16	Arbre à cames	-	-	-	-	27053463	1
17	Engrenage distribution	-	-	-	-	19054521	1
18	Boulon	-	-	-	-	61054900	2
19	Chaîne de distribution	-	-	-	-	19058021	1
20	Tendeur de chaine	-	-	-	-	19058220	1
21	Vis	-	-	-	-	98822316	1
22	Rondelle	-	-	-	-	95129115	1
23	Secteur	-	-	-	-	19055700	2
24	Anneau élastique	-	-	-	-	90353029	1
25	Poussoir	-	-	-	-	19045861	4
26	Culbuteur tige	-	-	-	-	19045020	4
27	Capuchon	-	-	-	-	27045420	4
28	Rondelle de séreté	-	-	-	-	23217800	2

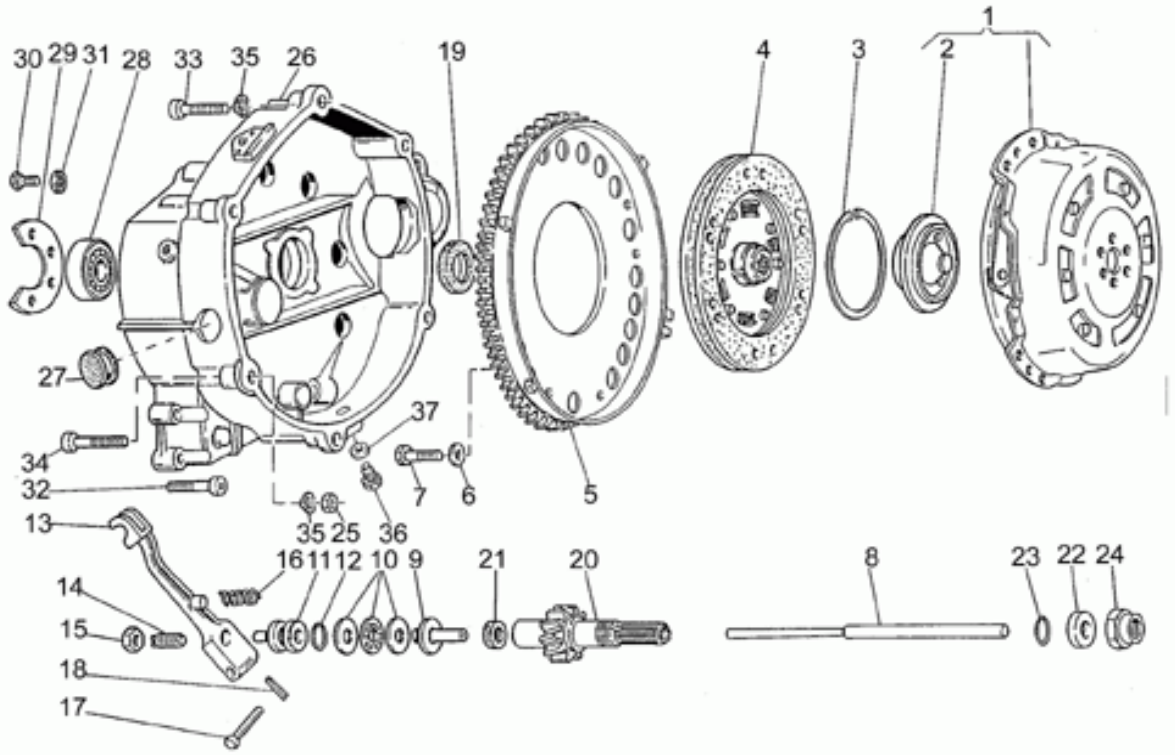

Ref.	Description	Year	I.M.	Country	Version	Code	Qty
1	Commande embrayage	-	-	-	-	19080161	1
2	Cuvette	-	-	-	-	19083462	1
3	Anneau élastique	-	-	-	-	90272075	1
4	Disque embrayage mené	-	-	-	-	27084460	1
5	Couronne	-	-	-	-	31067980	1
6	Rondelle	-	-	-	-	14217901	6
7	Vis M6X16	-	-	-	-	98054316	6
8	Tige	-	-	-	-	19085701	1
9	Corps intérieur	-	-	-	-	14086000	1
10	Palier poussée	-	-	-	-	12087001	1
11	Corps extérieur	-	-	-	-	14086100	1
12	Joint torique	-	-	-	-	90706170	1
13	Débrayage	-	-	-	-	14090201	1
14	Vis embrayage	-	-	-	-	14090400	1
15	Ecrou M8X1	-	-	-	-	92602508	1
16	Retour levier démarrage	-	-	-	-	94321105	1
17	Goupille	-	-	-	-	95780271	1
18	Goupille	-	-	-	-	95500222	1
19	Bague d'étanchéité	-	-	-	-	90403245	1
20	Arbre trnsmission Z=13	-	-	-	-	31210780	1
21	Bague d'étanchéité	-	-	-	-	90400616	1
22	Entretoise	-	-	-	-	19213760	1
23	Joint torique	-	-	-	-	90706235	1
24	Ecrou	-	-	-	-	19356760	1
25	Ecrou	-	-	-	-	92602208	1
26	Cloche embrayage DIGIPLEX	-	-	-	-	31200480	1
27	Bouchon	-	-	-	-	93180220	1
28	Roulement 25x52x15	-	-	-	-	92201225	1
29	Plaque fixation palier	-	-	-	-	19203460	1
30	Vis	-	-	-	-	98054314	3
31	Rondelle	-	-	-	-	14217901	3
32	Vis M6X30	-	-	-	-	98620330	11
33	Vis M8X35	-	-	-	-	98620435	5
34	Vis	-	-	-	-	98620450	1
35	Rondelle élastique	-	-	-	-	61270300	6
36	Bouchon vid.huile	-	-	-	-	31003766	1
37	Rondelle 10,2x18x2	-	-	-	-	95004210	1

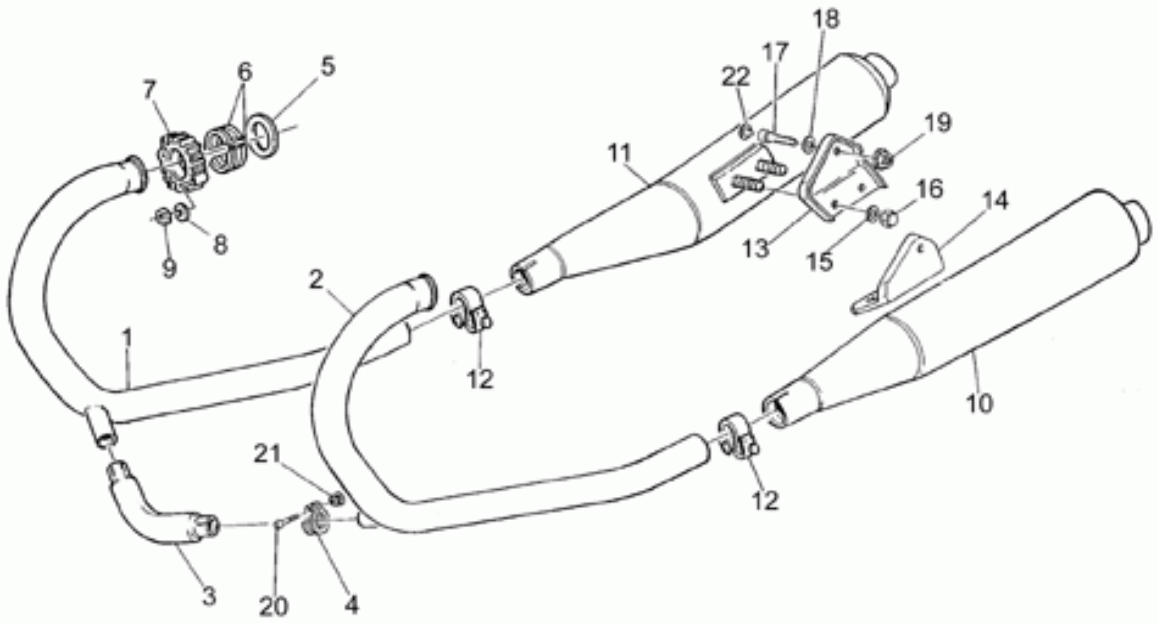

Ref.	Description	Year	I.M.	Country	Version	Code	Qty
1	Tuyau échappement d.	-	-	-	-	31120782	1
2	Tuyau échappement gche	-	-	-	-	31120783	1
3	Tuyau	-	-	-	-	31123981	1
4	Collier	-	-	-	-	31126960	2
5	Joint	-	-	-	-	19025280	2
6	Entretoise	-	-	-	-	19025460	4
7	Bague échappement	-	-	-	-	19121050	2
8	Rondelle spéciale	-	-	-	-	61013800	4
9	Ecrou	-	-	-	-	92701062	4
10	Silencieux G	-	-	-	-	31123060	1
11	Silencieux D	-	-	-	-	31122960	1
12	Collier	-	-	-	-	31123460	2
13	Plaque d.	-	-	-	-	31128660	1
14	Plaque g.	-	-	-	-	31128760	1
15	Rondelle élastique	-	-	-	-	61270300	6
16	Ecrou	-	-	-	-	92781081	4
17	Vis	-	-	-	-	98622420	2
18	Rondelle	-	-	-	-	14615901	2
19	Ecrou	-	-	-	-	92660008	2
20	Vis	-	-	-	-	61127520	2
21	Bague	-	-	-	-	61127220	2
22	Bouchon	-	-	-	-	23943410	2

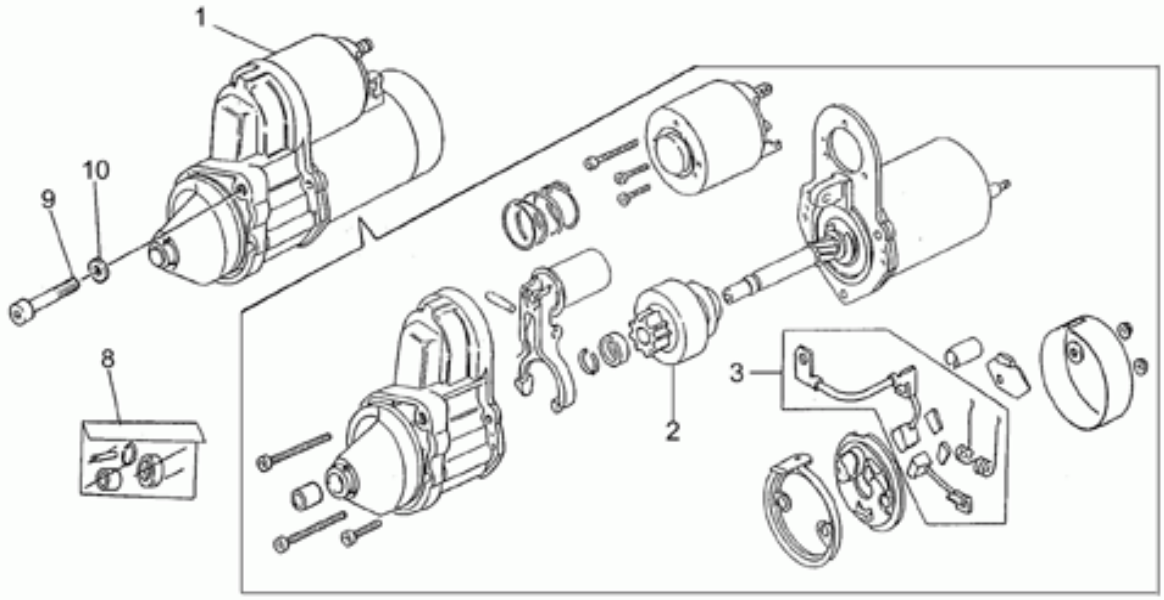

Ref.	Description	Year	I.M.	Country	Version	Code	Qty
1	Démarreur	-	-	-	-	30730711	1
2	Pignon compléte	-	-	-	-	30530510	1
3	Kit de révision brosse	-	-	-	-	30530511	1
8	Kit rév. démarreur	-	-	-	-	30530512	1
9	Vis M8X35	-	-	-	-	98620435	2
10	Rondelle élastique	-	-	-	-	61270300	2

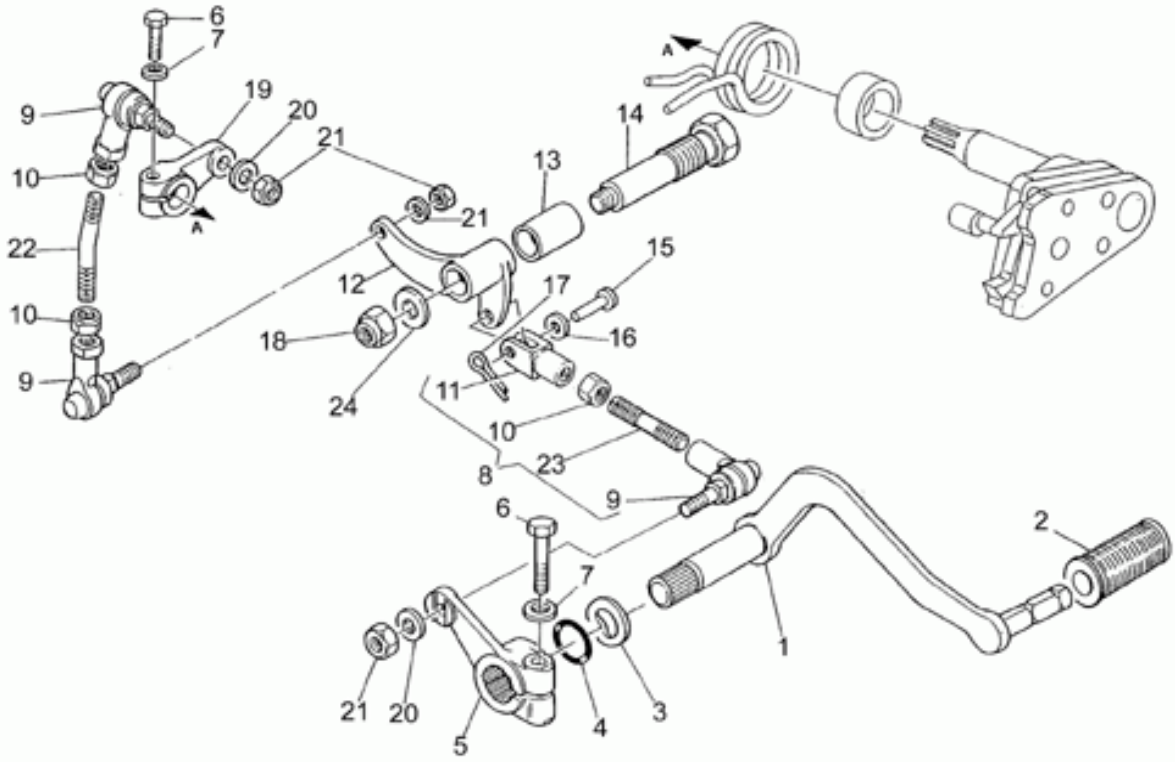

Ref.	Description	Year	I.M.	Country	Version	Code	Qty
1	Levier boîte de vitesses	-	-	-	-	31250960	1
2	Caoutchouc	-	-	-	-	14251001	1
3	Rondelle élastique	-	-	-	-	95129260	1
4	Joint torique	-	-	-	-	90706141	2
5	Levier	-	-	-	-	28256960	1
6	Vis	-	-	-	-	98052325	2
7	Rondelle spéciale	-	-	-	-	61013800	2
8	Tige renvoi boîte de vitesses	-	-	-	-	31257880	1
9	Fourchette	-	-	-	-	28258160	3
10	Ecrou	-	-	-	-	92602206	4
11	Fourchette	-	-	-	-	31626880	1
12	Levier	-	-	-	-	31256960	1
13	Bague	-	-	-	-	17252050	1
14	Pivot	-	-	-	-	31252360	1
15	Goupille	-	-	-	-	95770265	1
16	Rondelle	-	-	-	-	95129110	1
17	Goupille	-	-	-	-	95500222	1
18	Ecrou	-	-	-	-	92630508	1
19	Levier de commande	-	-	-	-	19258220	1
20	Rondelle spéciale	-	-	-	-	61013800	3
21	Ecrou M6x1	-	-	-	-	92630106	3
22	Tirant	-	-	-	-	18257950	1
23	Tige renvoi boîte de vitesses	-	-	-	-	96506040	1
24	Rondelle	-	-	-	-	95004208	1

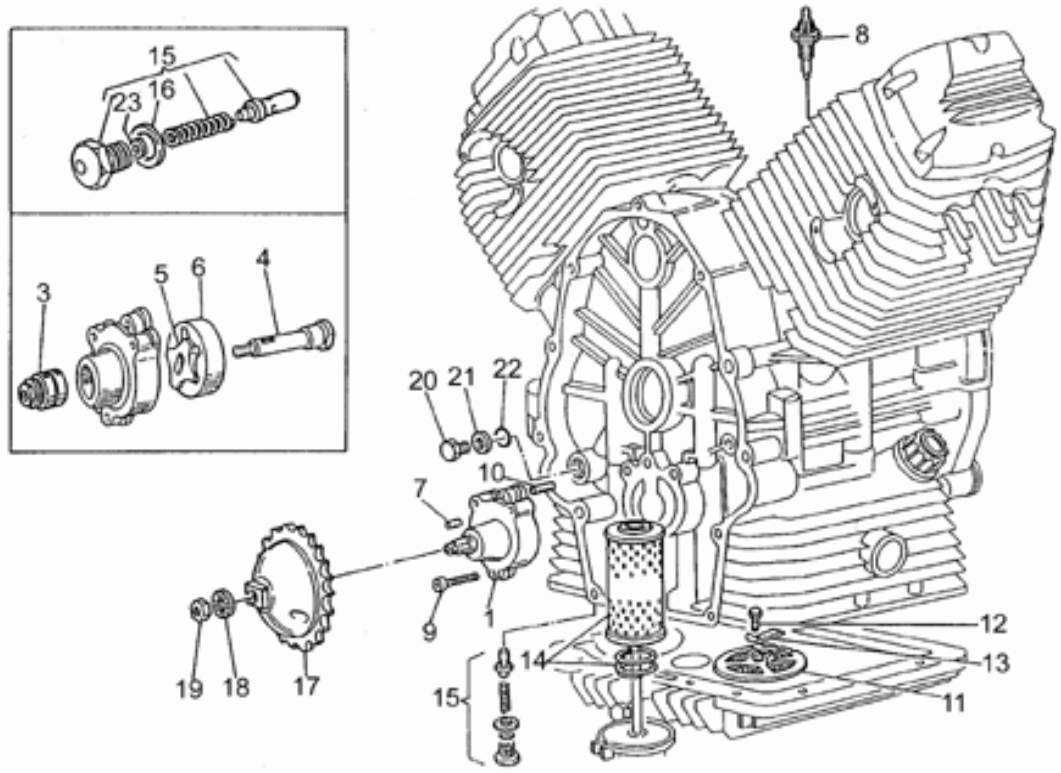

Ref.	Description	Year	I.M.	Country	Version	Code	Qty
1	Pompe huile	-	-	-	-	19146422	1
3	Roulement à rouleaux	-	-	-	-	92252210	1
4	Arbre pompe huile	-	-	-	-	20147810	1
5	Rotor intérieur	-	-	-	-	20148410	1
6	Rotor extérieur	-	-	-	-	20148610	1
7	Rouleau	-	-	-	-	92296723	1
8	Détecteur pression	-	-	-	-	19768720	1
9	Vis M6X35	-	-	-	-	98620335	3
10	Goupille	-	-	-	-	19018920	2
11	Filtre à huile	-	-	-	-	19152200	1
12	Vis	-	-	-	-	98054314	1
13	Plaquette	-	-	-	-	95187006	1
14	Filtre à huile	-	-	-	-	27153085	1
15	Oil pressure valve	-	-	-	-	31158250	1
16	Rondelle	-	-	-	-	18144350	3
17	Pignon de pompe	-	-	-	-	20147710	1
18	Rondelle	-	-	-	-	19149800	1
19	Ecrou	-	-	-	-	92602510	1
20	Bouchon	-	-	-	-	31016050	1
21	Garniture	-	-	-	-	18161150	1
22	Joint torique	-	-	-	-	90706111	1
23	Rondelle 6,15x11x0,8	-	-	-	-	95004206	1

The mm 2 thickness plate pos.5 and mm 2 protective pos.27, have to be placed from gearcase GH14246, and also on gearcase GH14220, 226, 227, from gearcase GH14229 to GH14238 on GH14220 e 244.

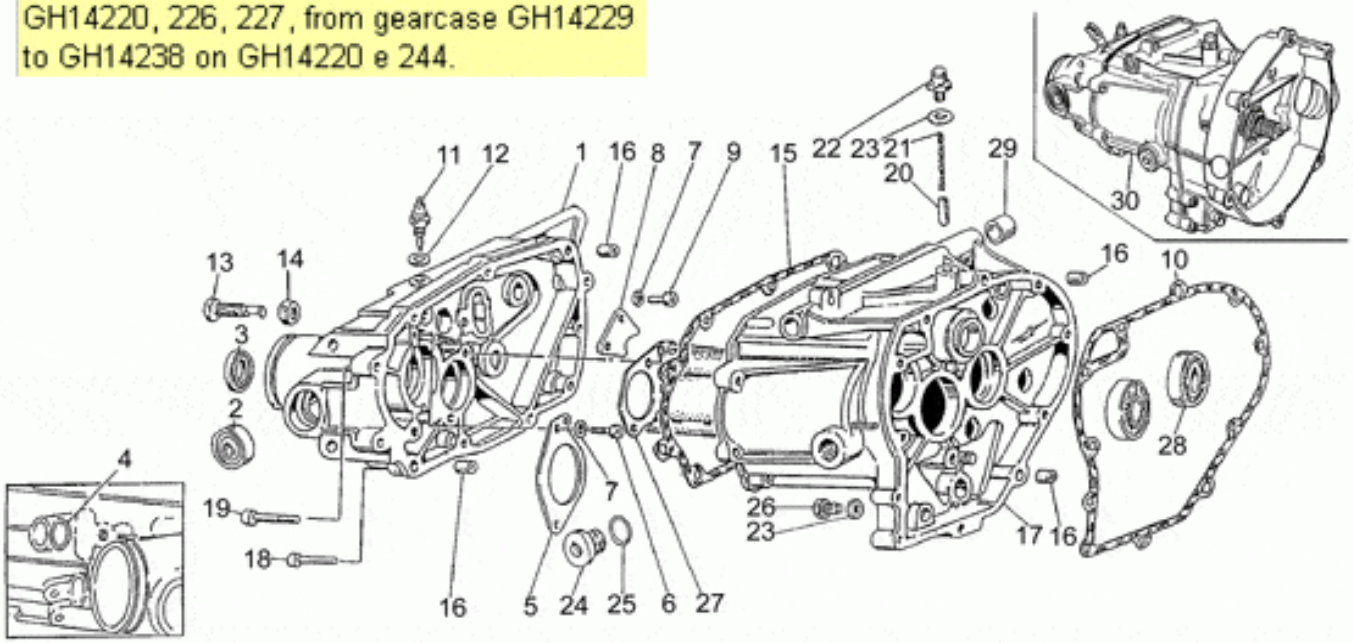

Ref.	Description	Year	I.M.	Country	Version	Code	Qty
1	Couvercle boîte vit. gris	-	-	-	-	31200880	1
2	Roulement	-	-	-	-	92204215	2
3	Bague d'étanchéité	-	-	-	-	90402841	1
4	Joint torique	-	-	-	-	90706140	1
5	Plaque	-	-	-	-	23213870	1
	Plaque	-	-	-	-	23213872	1
6	Vis	-	-	-	-	98622314	4
7	Rondelle	-	-	-	-	14217901	6
8	Plaque	-	-	-	-	19235800	1
9	Vis	-	-	-	-	98622314	2
10	Joint	-	-	-	-	23200370	1
11	Capteur	-	-	-	-	19207220	1
12	Joint	-	-	-	-	12154200	1
13	Vis	-	-	-	-	19237800	1
14	Ecrou bas M12x1,25	-	-	-	-	92602512	1
15	Joint	-	-	-	-	19201120	1
16	Bague	-	-	-	-	19002020	4
17	Carter de boîte vitesses	-	-	-	-	31200280	1
18	Vis M6X30	-	-	-	-	98620330	5
	Vis M6X35	-	-	-	-	98620335	2
19	Vis M8X35	-	-	-	-	98620435	4
20	Encliquetage	-	-	-	-	55234700	1
21	Ressort	-	-	-	-	94321067	1
22	Bouchon purge	-	-	-	-	19206501	1
23	Garniture	-	-	-	-	10528900	2
24	Bouchon huile	-	-	-	-	19351200	1
25	Joint torique 20,24x2,62	-	-	-	-	90706203	1
26	Bouchon vid.huile	-	-	-	-	31003766	1
27	Huile cloison	-	-	-	1A	19208220	1
	Huile cloison	-	-	-	2A	23208272	1
28	Roulement	-	-	-	-	92201120	1
29	Bague	-	-	-	-	19202320	2
30	Boîte de vitesses cpl.	-	-	-	-	31991582	1

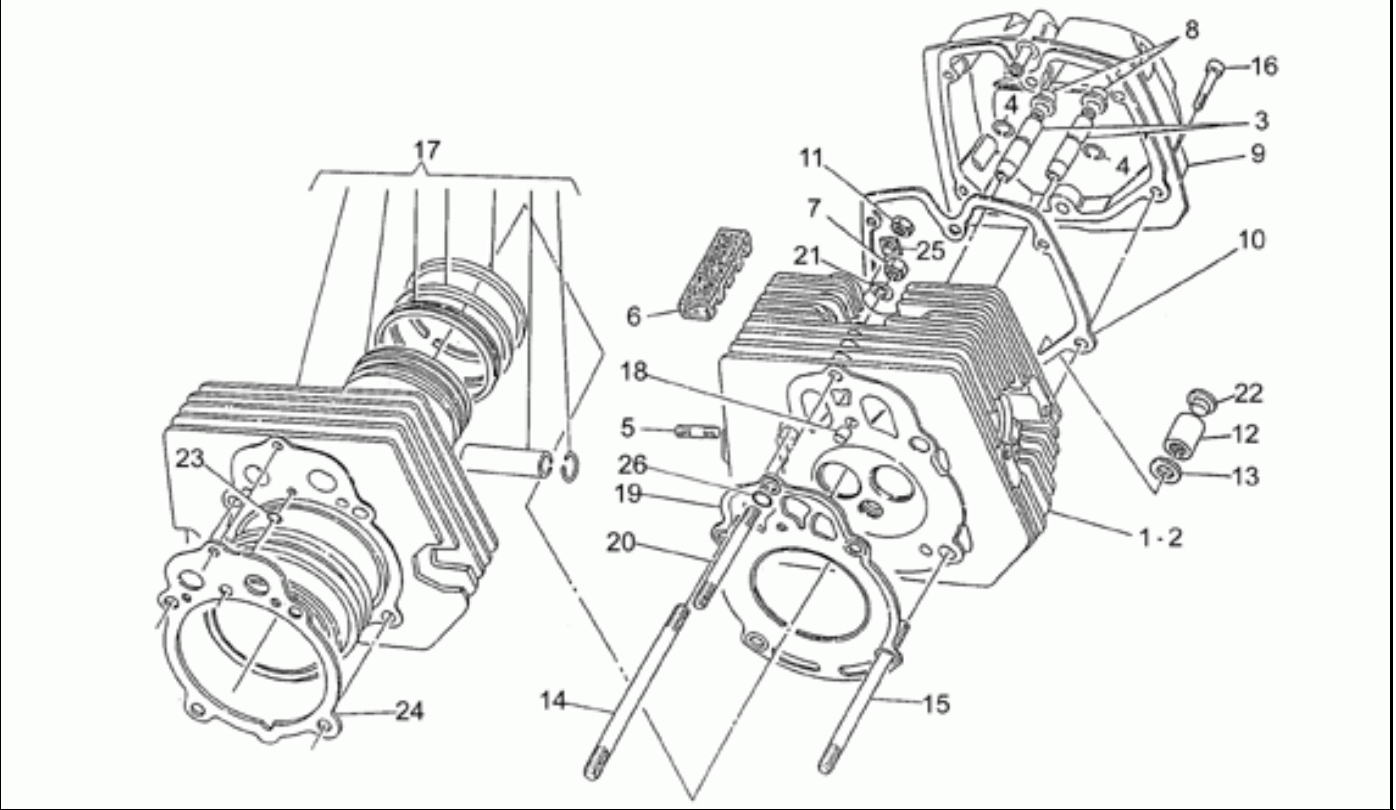

Ref.	Description	Year	I.M.	Country	Version	Code	Qty
1	Culasse d.gris	-	-	-	-	31022180	1
2	Culasse g.gris	-	-	-	-	31022280	1
3	Guide soupape	-	-	-	-	61036801	4
4	Anneau élastique	-	-	-	-	90353009	4
5	Vis sans tête	-	-	-	-	96506042	4
6	Plaquette antivibratile	-	-	-	-	19025300	4
7	Ecrou	-	-	-	-	19021920	2
8	Bouchon	-	-	-	-	19037820	4
9	Couvercle soupapes	-	-	-	-	31023500	2
10	Joint	-	-	-	-	19023700	2
11	Ecrou	-	-	-	-	92603010	4
12	Ecrou colonne	-	-	-	-	13021900	4
13	Rondelle	-	-	-	-	95129180	4
14	Vis sans tête	-	-	-	-	96510182	4
15	Vis sans tête 145mm	-	-	-	-	96510145	4
16	Vis M6X25	-	-	-	-	98622325	10
17	Cylindre av.piston cpl.	-	-	-	-	31060181	2
18	Bague	-	-	-	-	19021320	2
19	Joint tête	-	-	-	-	27022020	2
20	Vis sans tête	-	-	-	-	96508107	2
21	Rondelle élastique	-	-	-	-	61270300	2
22	Bouchon	-	-	-	-	93180245	4
23	Joint torique	-	-	-	-	61027200	2
24	Joint	-	-	-	-	27020820	2
25	Cale	-	-	-	-	19032980	4
26	Joint torique	-	-	-	-	90706076	2