# Ignition switch positions

| | |
|---|---|
| 0 | |
| 1 | 30/30 int. |
| 2 | 30/30 int. 15/54 |
| 3 | 30/30 int. 15/54 50 |

Note: Position 3 does not serve on machines with starter button.

# Legend

| | |
|---|---|
| A | Headlight |
| B | Main driving lights |
| C | Terminal block with fuses |
| D | Distributing block |
| E | Light switch and horn button |
| F | Spark plugs |
| G | Distributor |
| H | Contact breaker |
| I | H.T. coil |
| L | Starter button |
| M | Horn |
| N | Neutral indicator cut-out |
| O | Stop light cut-out |
| P | Oil pressure cut-out |
| Q | Ignition switch |
| R | Number plate and tail light |
| S | Plate illumination and stop light |
| T | Generator |
| U | Regulator |
| V | Battery |
| Z | Starter motor solenoid |
| X | Starter motor |
| AA | Speedometer (with illumination bulb) |
| BB | Rev-counter (with illumination bulb) |
| CC | Lights indicator (red) |
| DD | Neutral indicator (orange) |

| | |
|---|---|
| EE | Generator charge indicator (red) |
| FF | Oil pressure indicator (red) |
| K | Relay for starter solenoid |

F

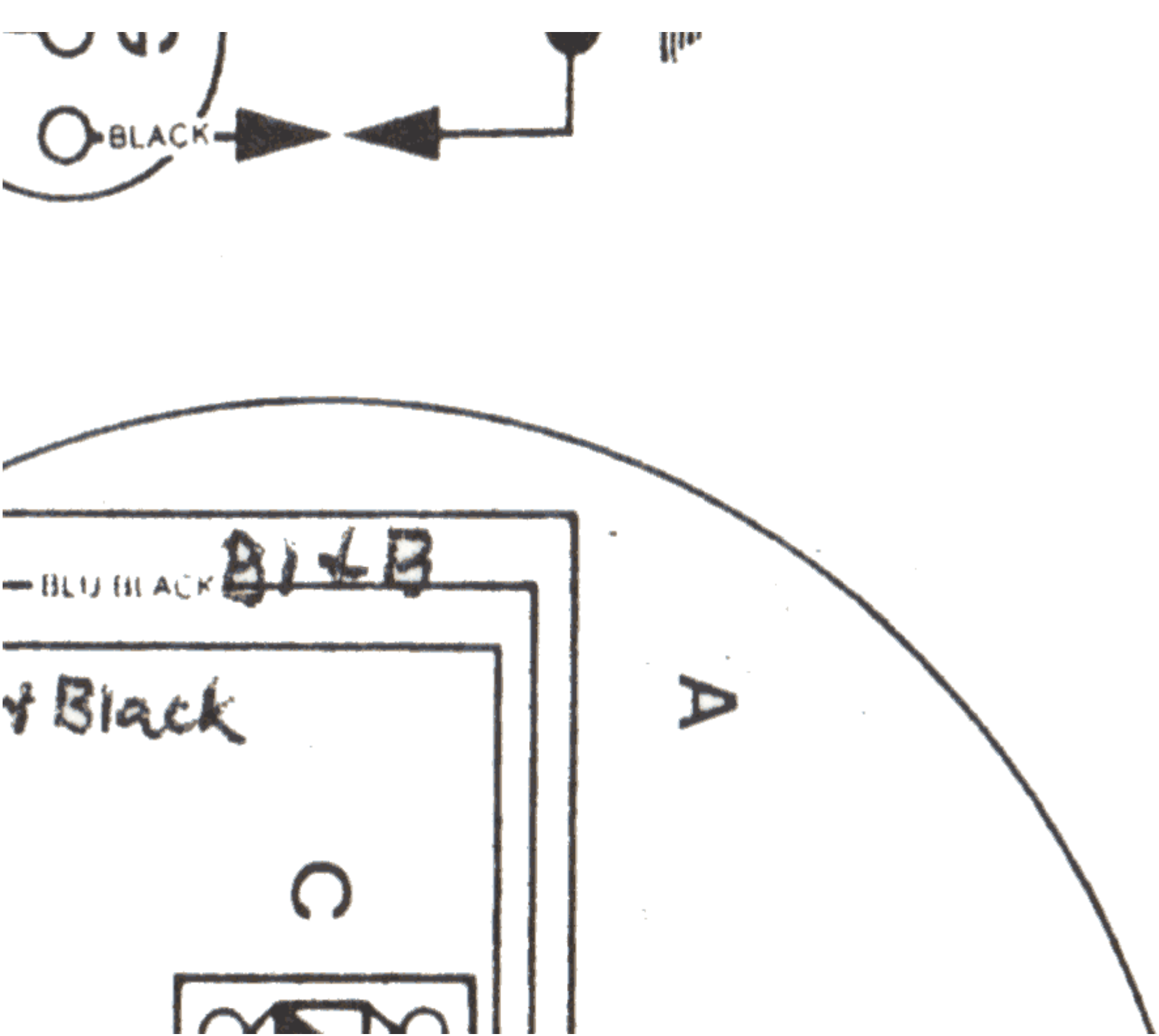
BLACK
BLU BLACK
BLK B
y Black
A
C

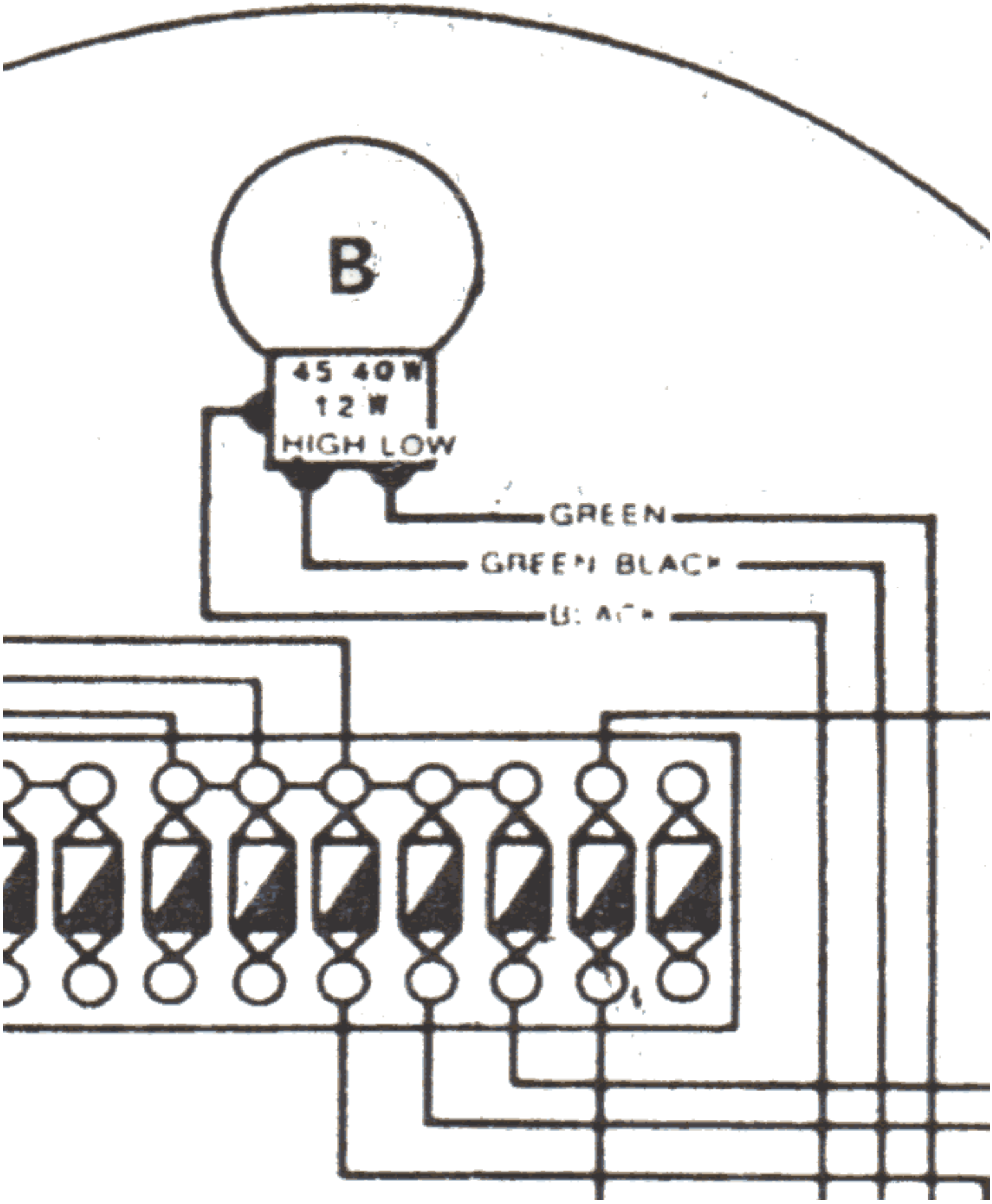
B
45 40W
12W
HIGH LOW
GREEN
GREEN BLACK

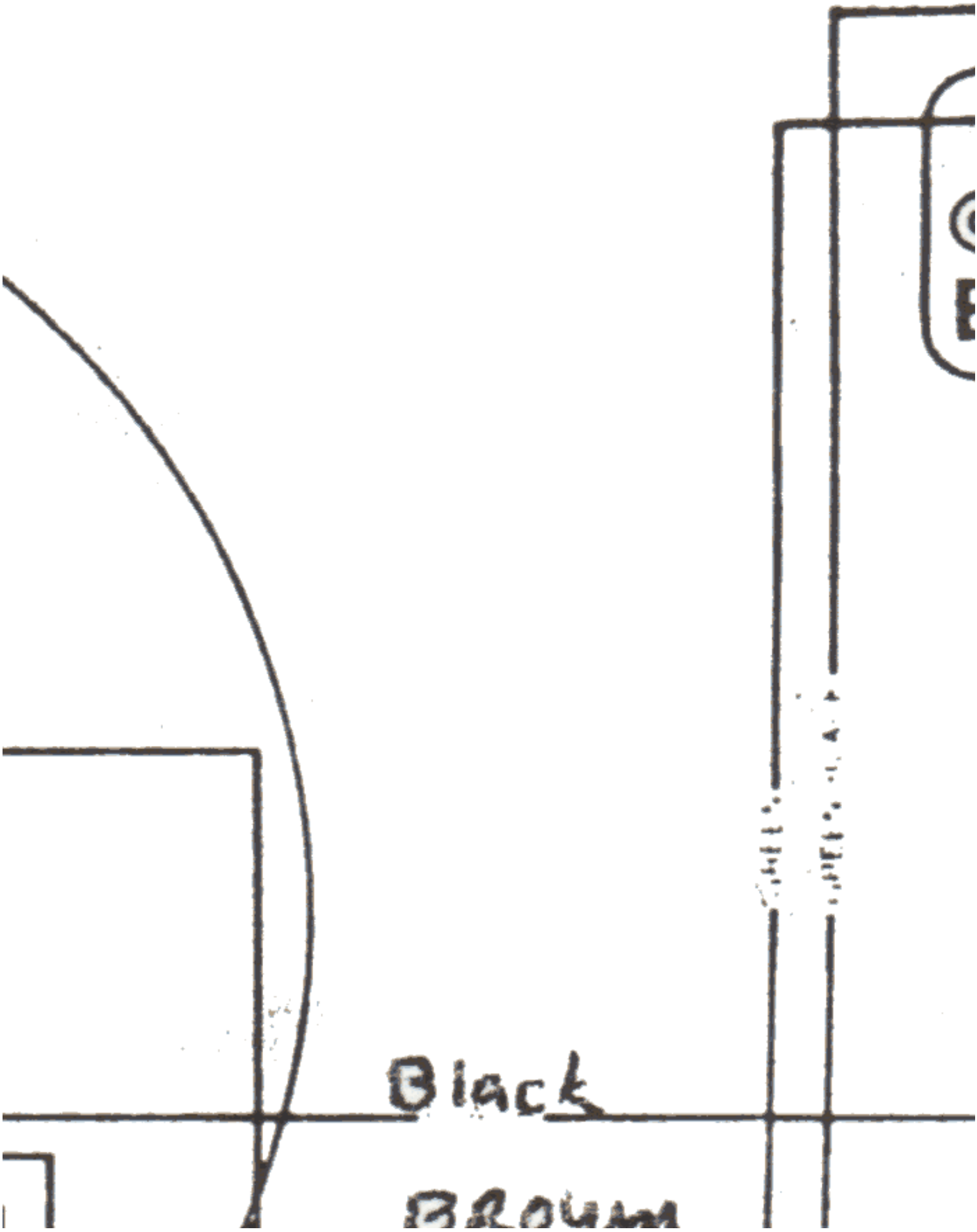
Black

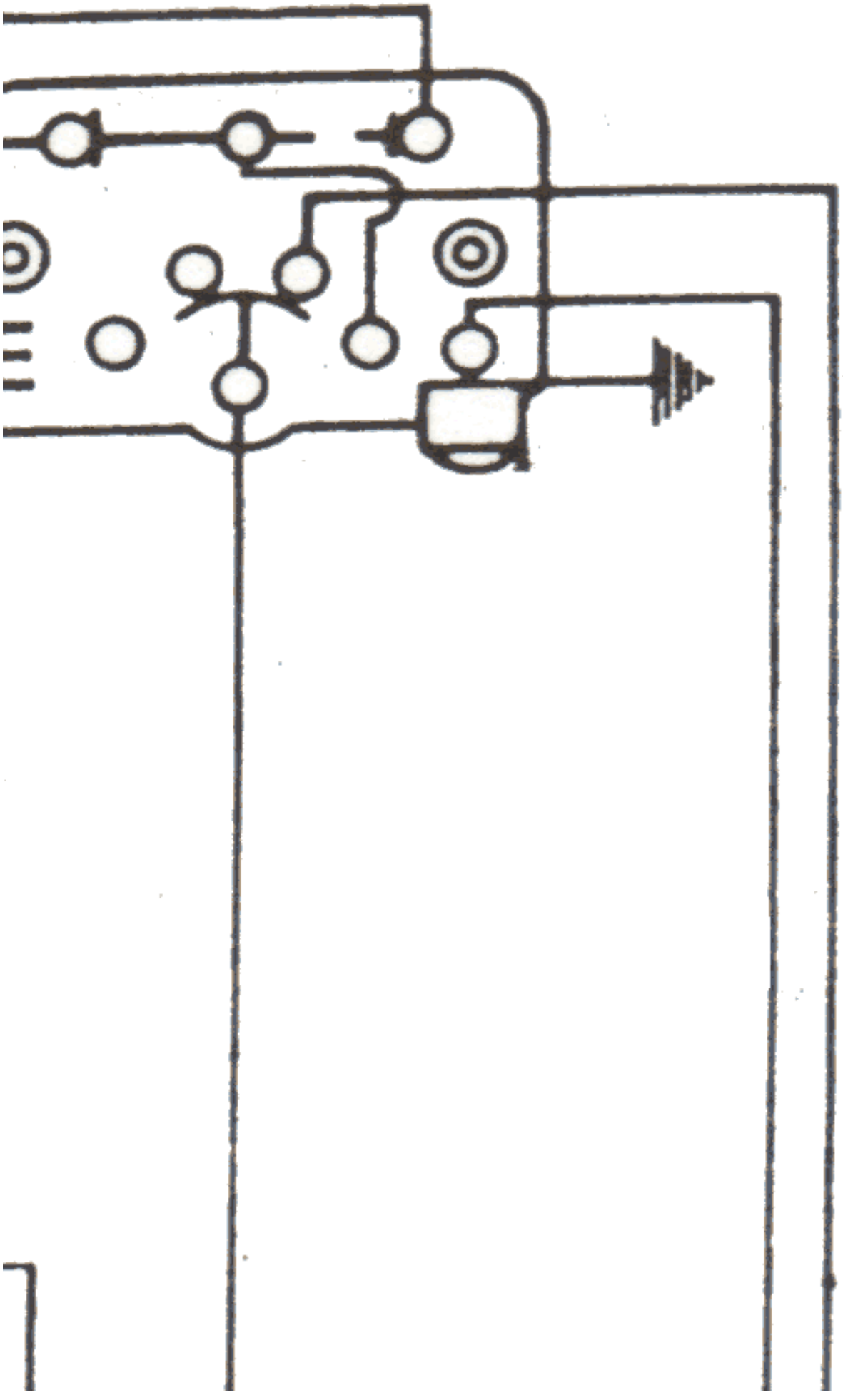

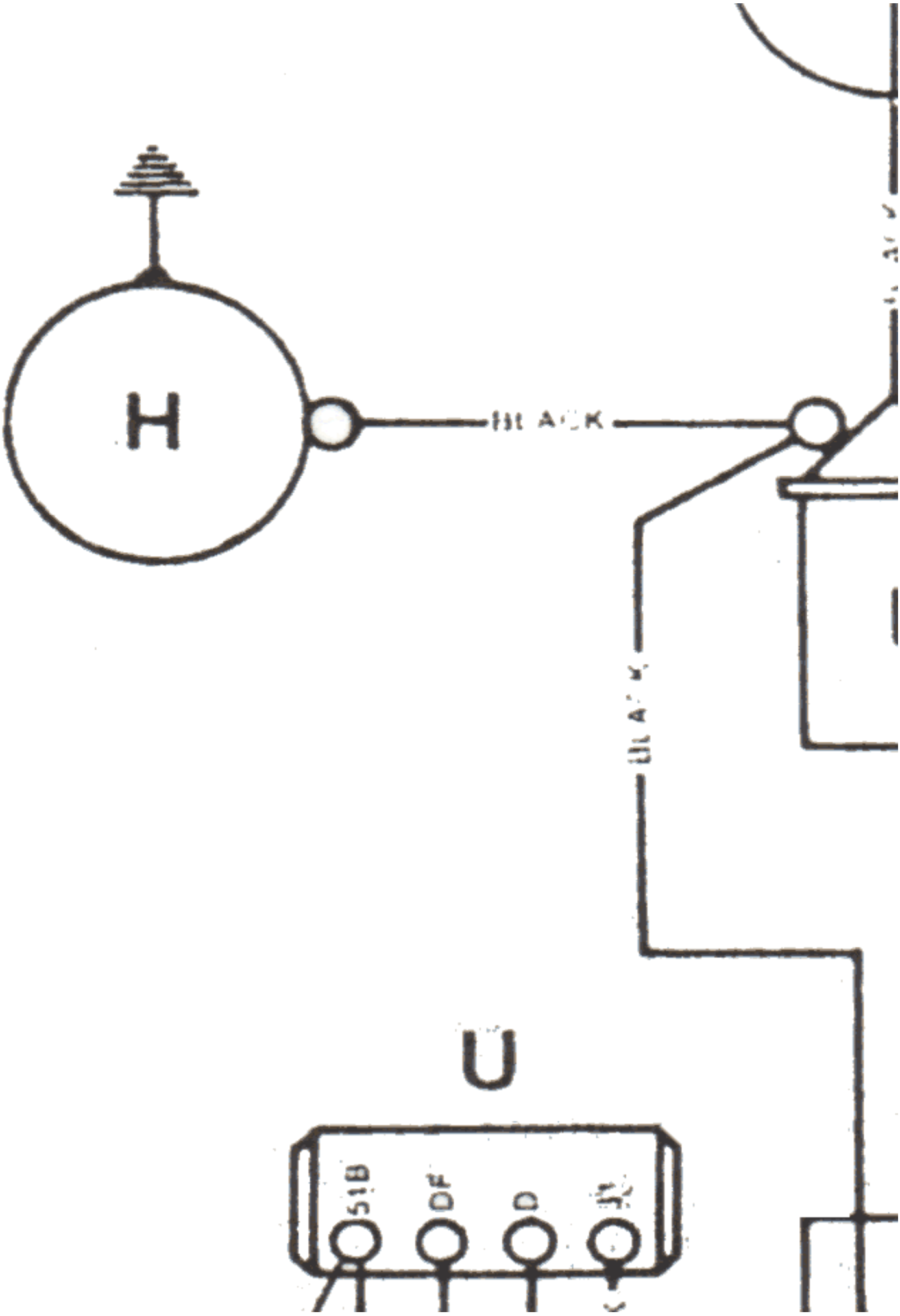
H
U
51B
DF
D

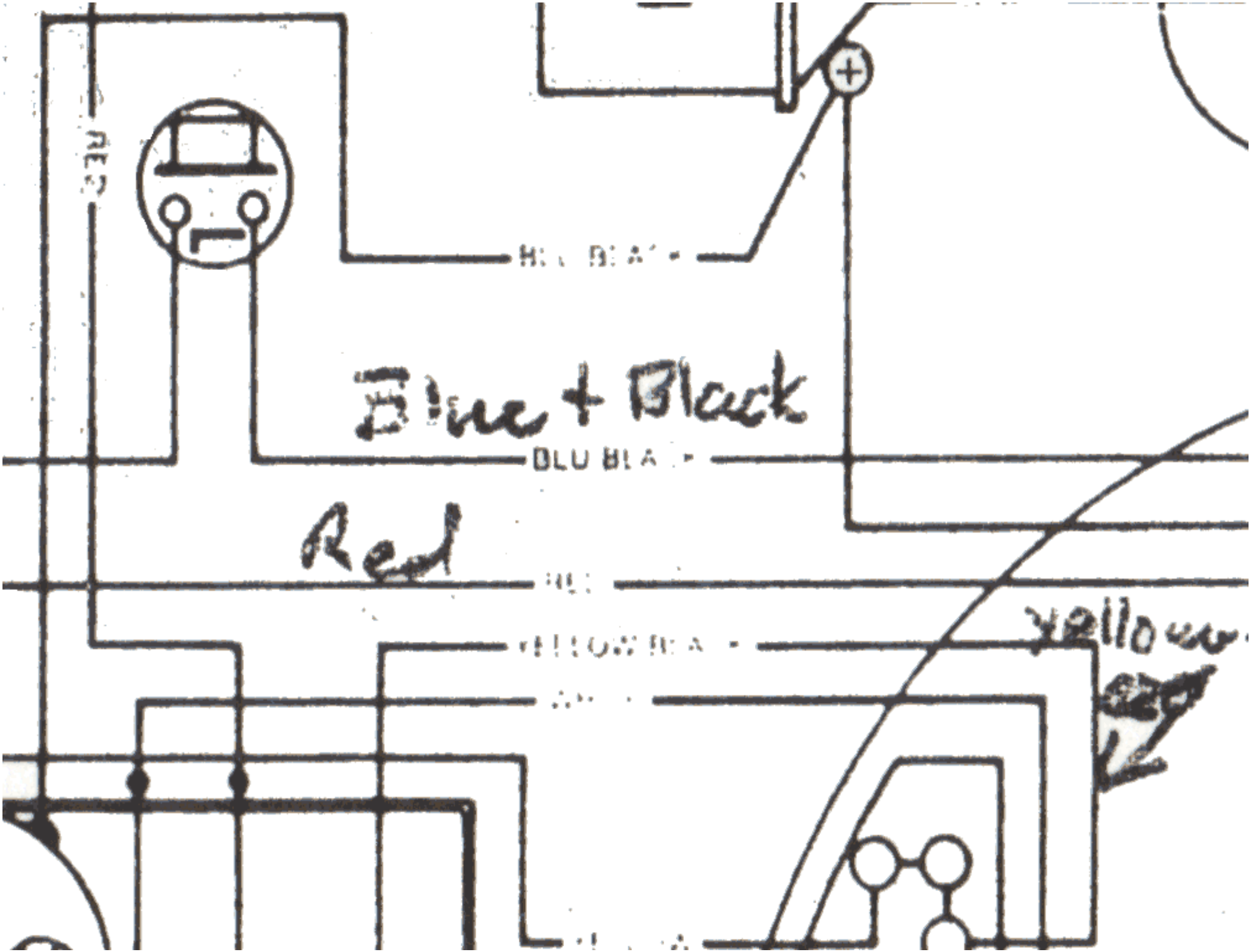
Blue + Black
Red
Yellow

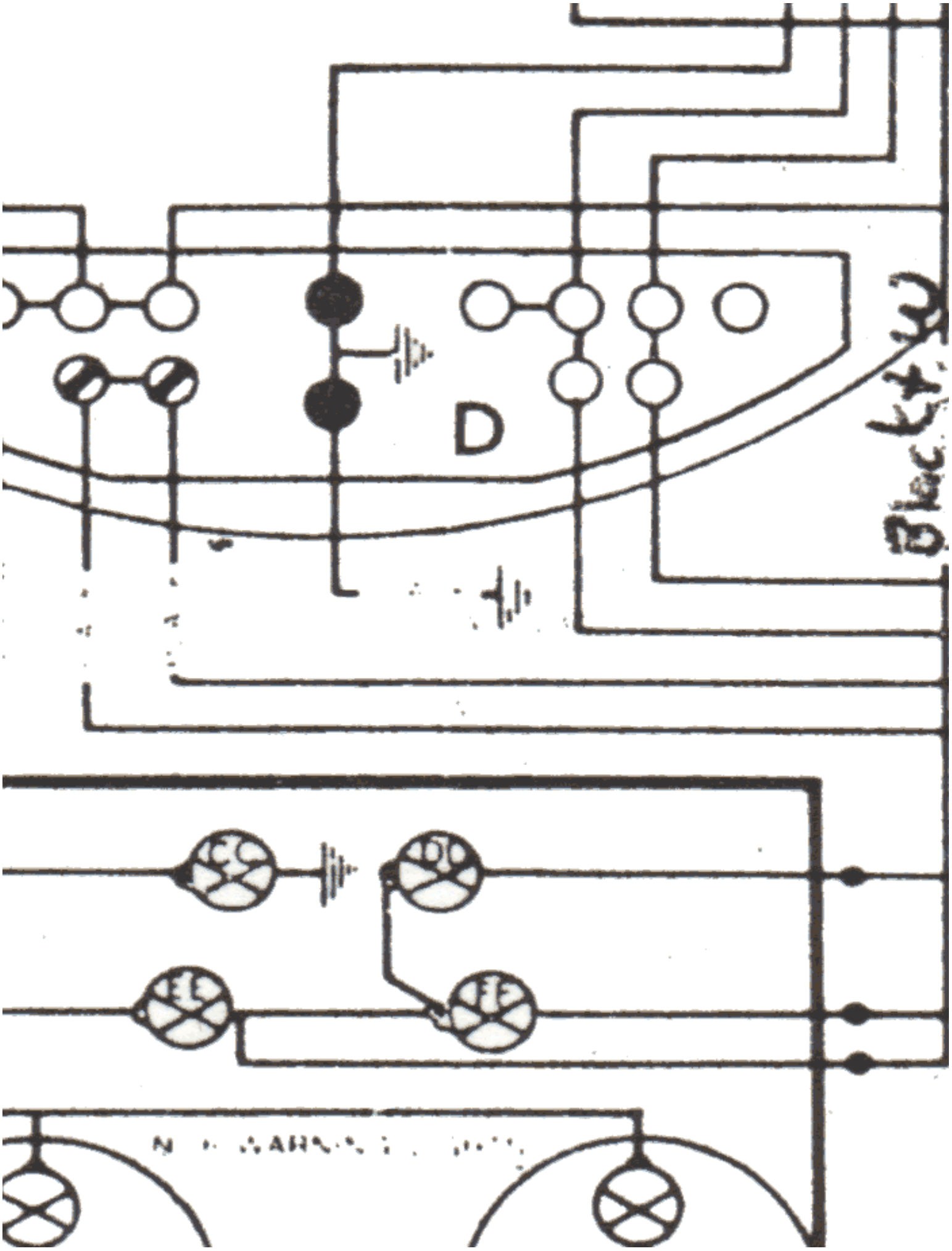
D

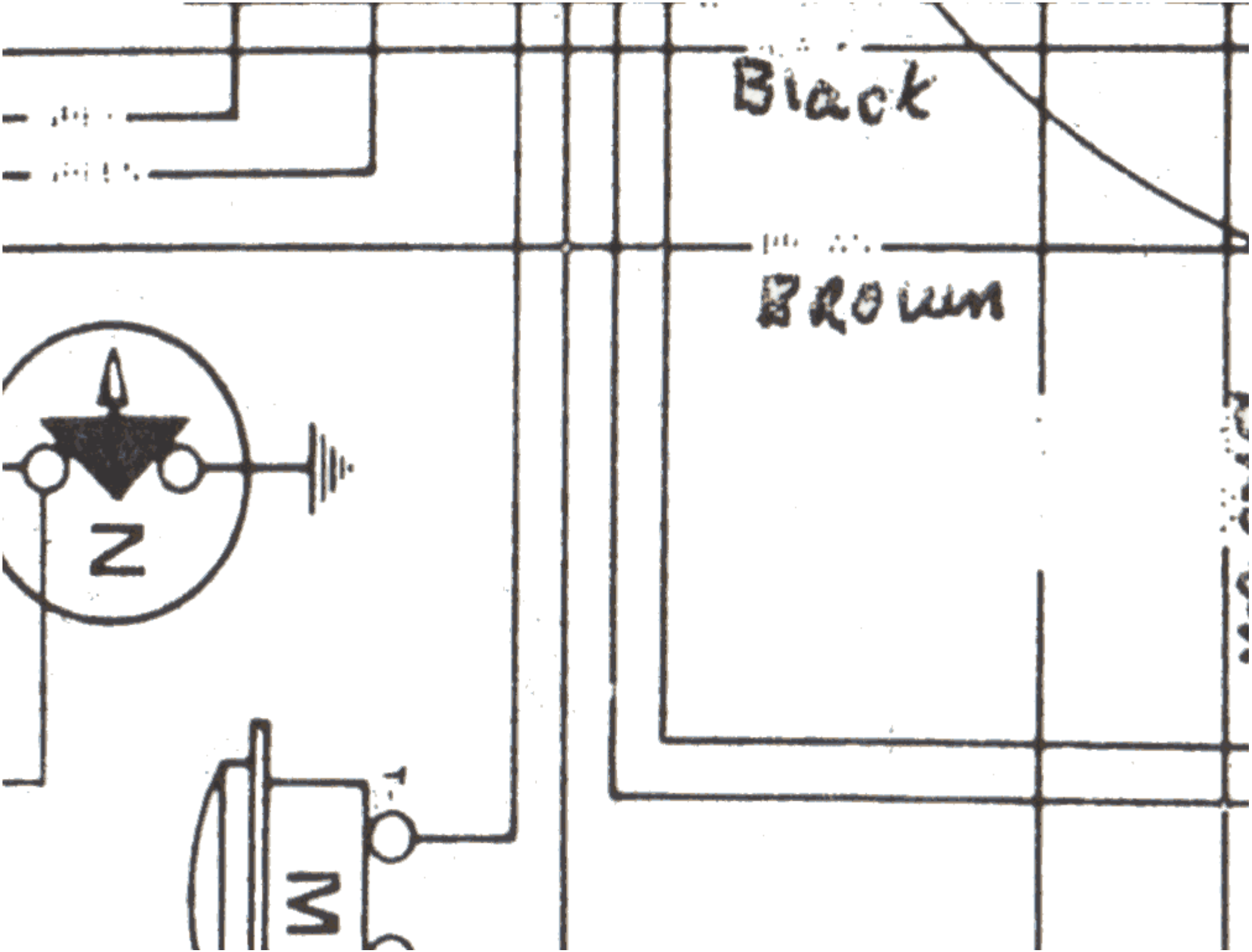
Black
BROWN
N
W

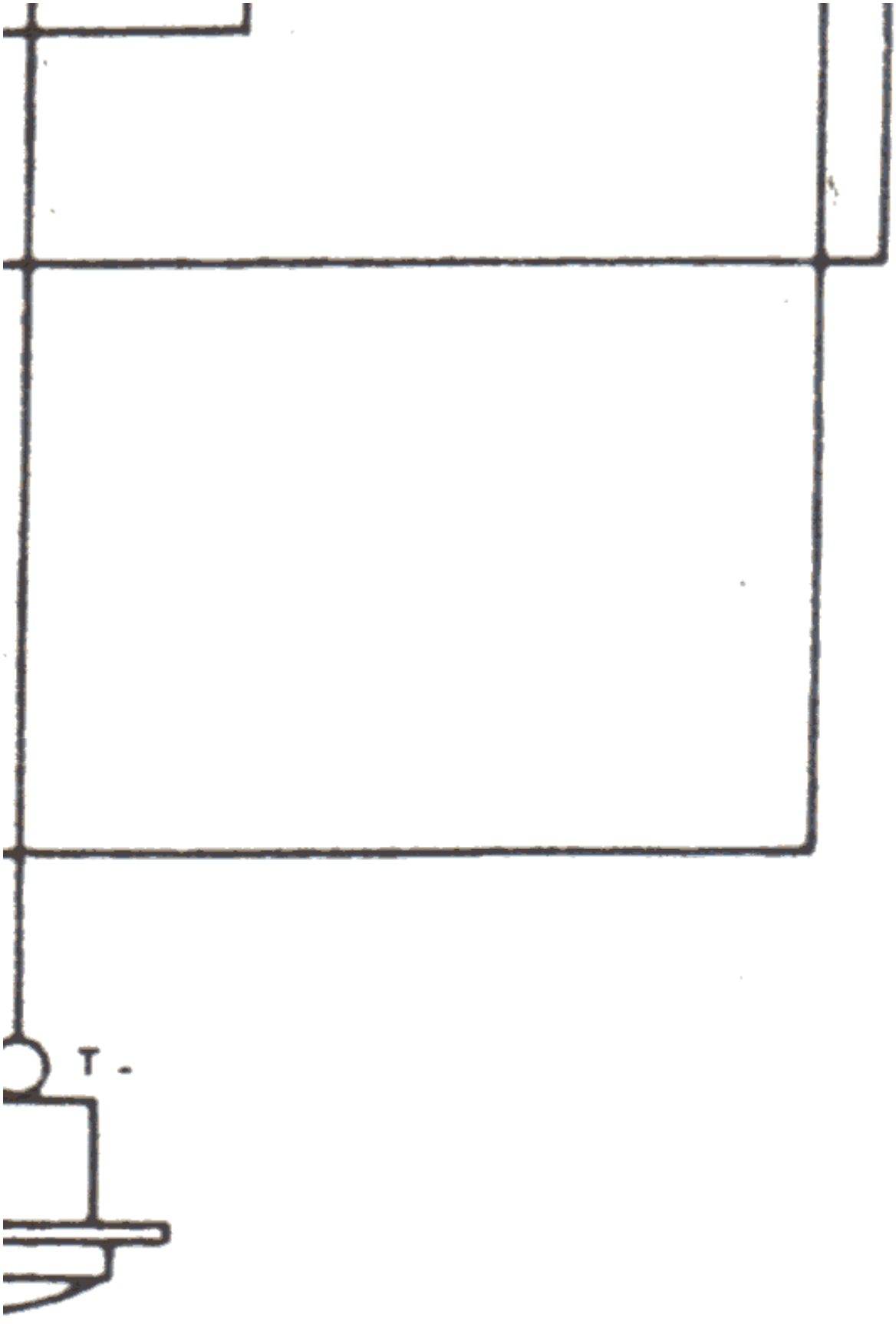
T -

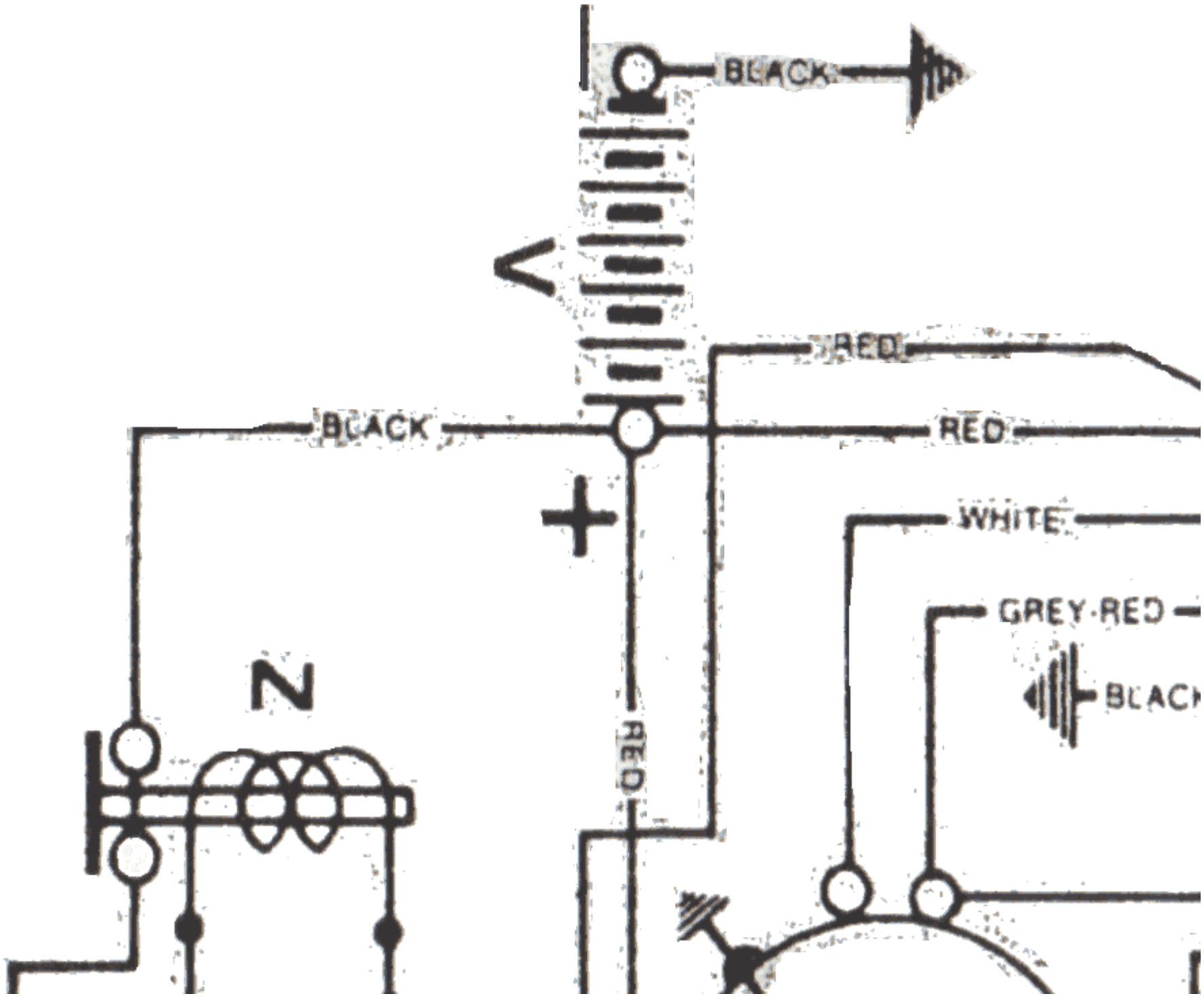
BLACK
RED
BLACK
RED
WHITE
GREY-RED
RED
N

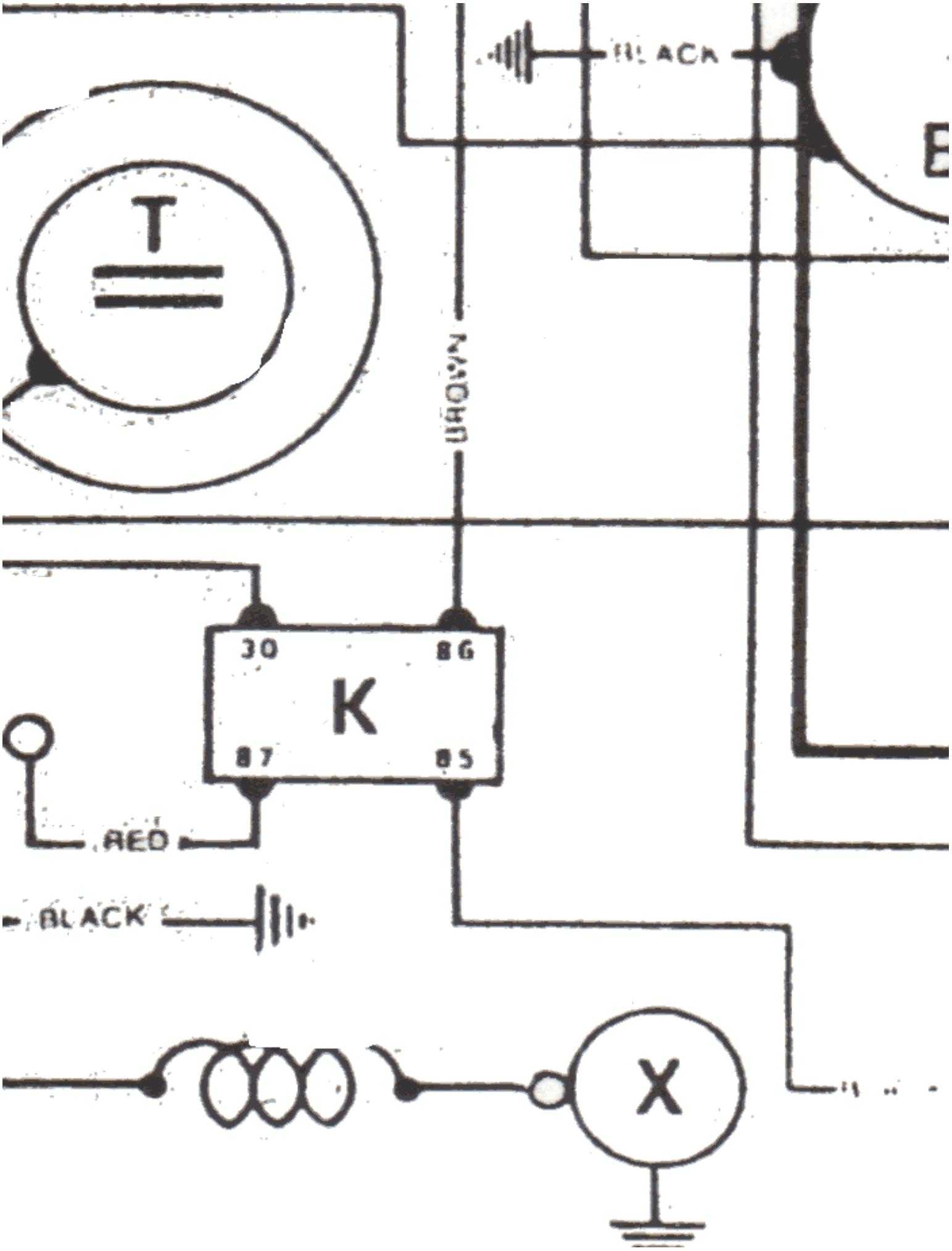
BLACK
T
BROWN
30
86
K
87
85
RED
BLACK
X

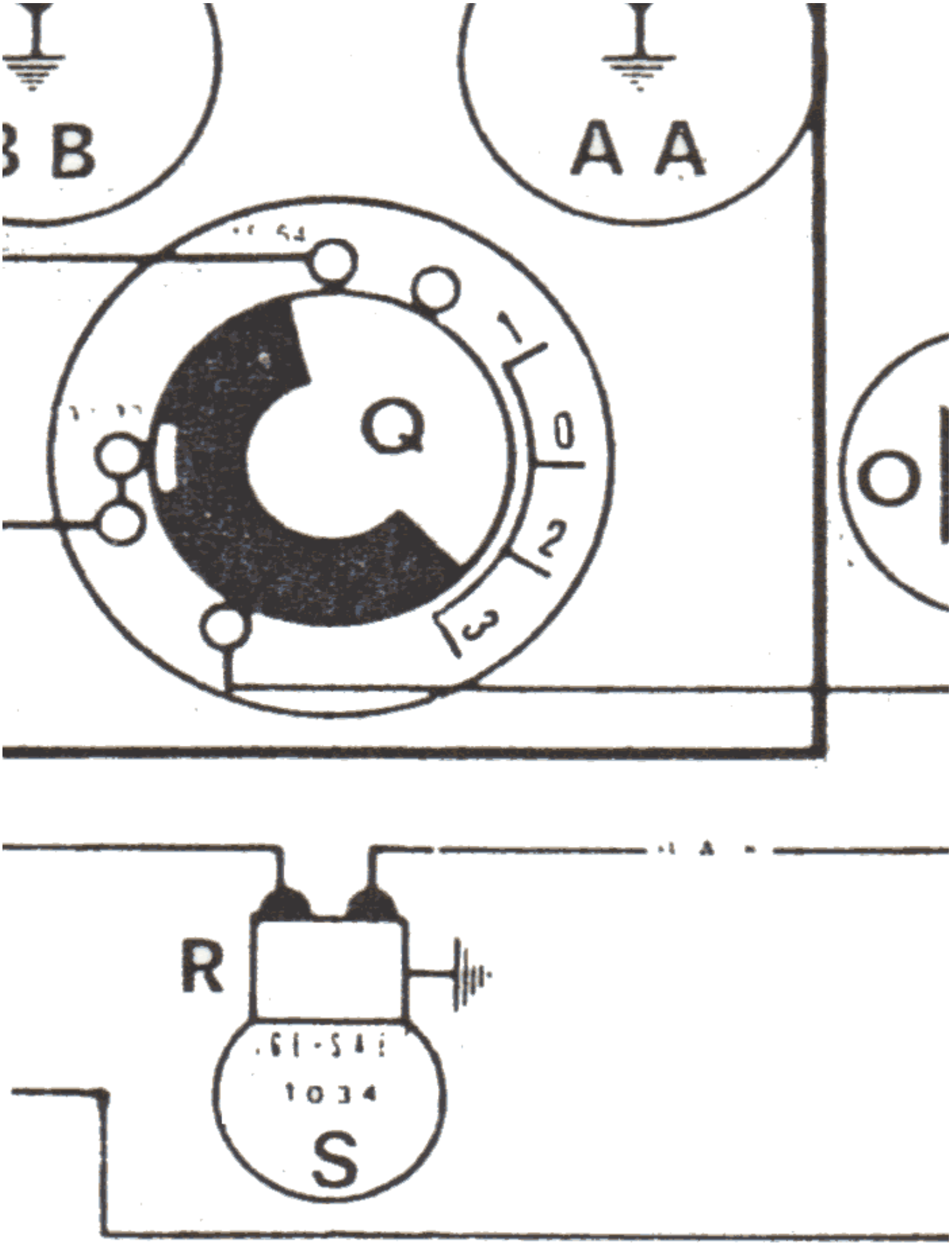
B B
A A
Q
0
2
3
R
S

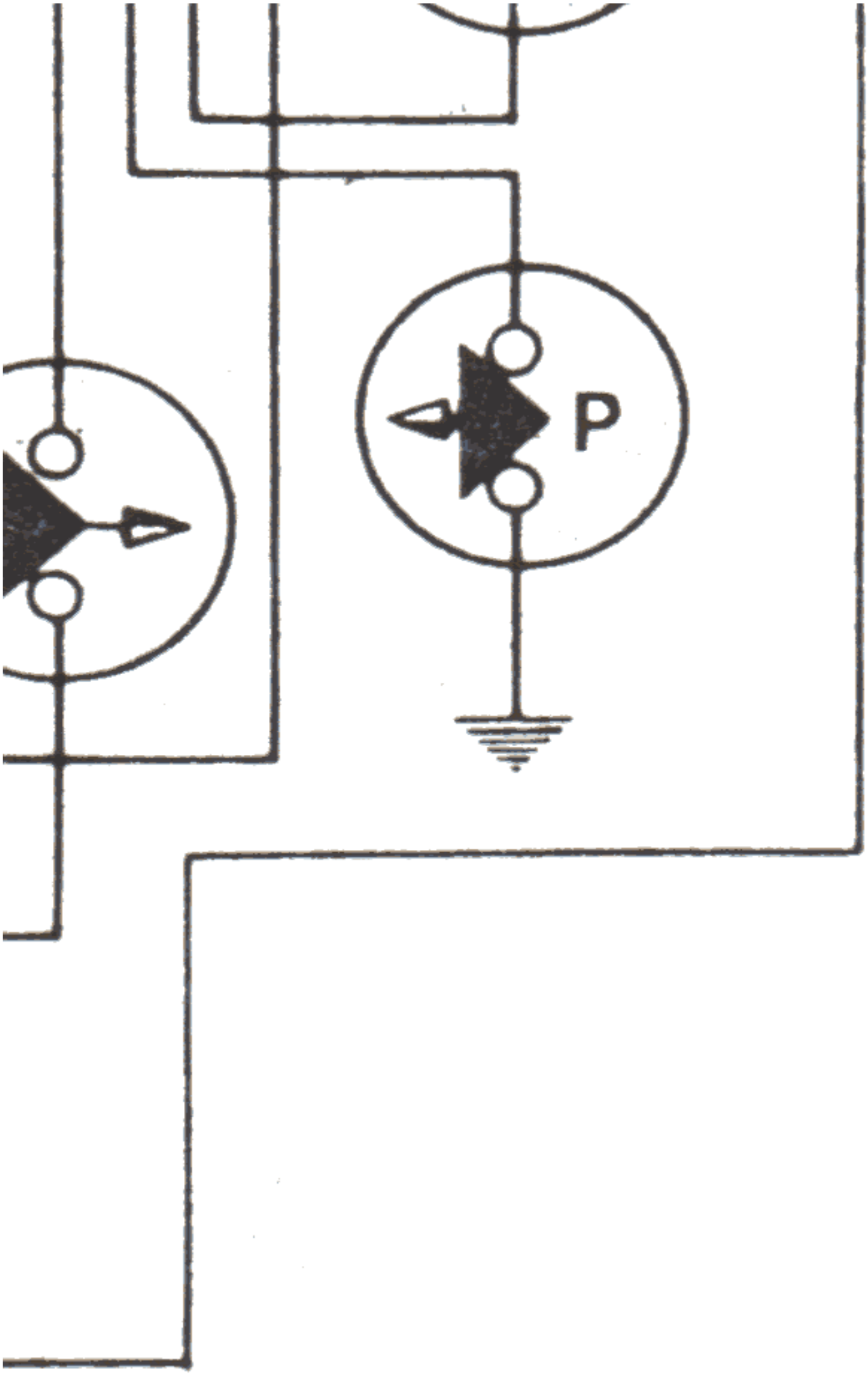
P

Wiring dia

gram (V850 Eldorado r

nodel)